BID PROPOSAL FORM BID NO. 2025-009

BID TO: **CITY COMMISSION**
CITY OF MARGATE

1. The undersigned bidder proposes and agrees, if this bid is accepted, to enter into an Agreement with the City in the form included in the Contract Documents to perform the Work as specified or indicated in said Contract Documents entitled:

FURNISH AND INSTALL (6) HVAC SYSTEMS
BID NO. 2025-009

2. Bidder accepts all of the terms and conditions of the Contract Documents, including without limitation those in the Notice Inviting Bids and Instructions to Bidders, dealing with the disposition of the Bid Security.

3. The bid will remain open for the period stated in the Notice Inviting Bids unless otherwise required by law. Bidder will enter into an Agreement within the time and in the manner required in the Notice Inviting Bids and the Instructions to Bidders, and will furnish the insurance certificates, payment bond, and performance bond required by the Contract Documents.

4. It is the Contractor's responsibility to contact the City at (954) 935-5346 prior to the bid opening to determine if any addenda have been issued on the project. Bidder has examined copies of all the Contract Documents including the following addenda (receipt of all of which is acknowledged):

Number	Date
1	04/29/25
2	05/14/25

5. Bidder has familiarized himself with the nature and extent of the Contract Documents, Work, site, locality where the Work is to be performed, the legal requirements (federal, state and local laws, ordinances, rules and regulations), and the conditions affecting cost, progress or performance of the Work and has made such independent investigations as Bidder deems necessary.

6. This bid is genuine and not made in the interest of or on behalf of any undisclosed person, firm, or corporation and is not submitted in conformity with any agreement or rules of any group, association, organization, or corporation. Bidder has not directly or indirectly induced or solicited any other bidder to submit a false or sham bid. Bidder has not solicited or induced any person, firm or corporation to refrain from bidding and bidder has not sought by collusion to obtain for itself any advantage over any other bidder or over the City.

To all the foregoing, and including all Bid Schedule(s) and Information Required of Bidder contained in this Bid Form, said bidder further agrees to complete the Work required under the Contract Documents within the Contract Time stipulated in said Contract Documents, and to accept in full payment thereof the Contract Price based on the Total Bid Price(s) named in the aforementioned Bidding Schedule(s).

NAME OF FIRM: Thinking on my world.Inc

ADDRESS: 14981 sw 17 ln Miami FL 33185

NAME OF SIGNER Rafael Ramirez Cabrera
(Print or Type)

TITLE OF SIGNER Owner / Lic Contractor

SIGNATURE: _____ DATE: 05/15/2025

TELEPHONE NO: 786-635-8114 FACSIMILE NO: _____

EMAIL ADDRESS: thinkingonmyacworld@gmail.com

SCHEDULE OF BID PRICES – BID NO. 2025-009

TO: CITY COMMISSION

CITY OF MARGATE

(Please fill in all blanks and return with your proposal.)

In accordance with your request for proposals and the specifications contained herein, the undersigned proposes the following:

BIDDER AGREES TO PERFORM ALL THE WORK DESCRIBED IN THE CONTRACT DOCUMENTS FOR THE FOLLOWING UNIT PRICES OR LUMP SUMS. BIDS SHALL INCLUDE SALES TAX AND ALL OTHER APPLICABLE TAXES AND BIDDER UNDERSTANDS THAT THE EXTENDED TOTAL FOR EACH AND EVERY ITEM IS THE RESULT OF MULTIPLYING THE QUANTITY TIMES THE UNIT COST STATED IN FIGURES. ANY DISCREPANCY BETWEEN THE UNIT AND TOTAL, THE UNIT PREVAILS.

****

DESCRIPTION	TOTAL COST
Unit #1: **Furnish/Install (1) New Carrier 3-ton package unit, 13.4 SEER2.** **Model #50FE-A04A2B5-0A0A0, refrigerant R-454B** **Volts/Phase 208/230/3/60, AHRI #214606067.** **Furnish/Install (1) 5.0 KW Electric Heater.** **Furnish/Install (1) Motorized outside aid damper.** **Furnish/Install one new adapter curb to existing roof curb at** **Police Dept., City Hall,** **5790 Margate Blvd., Margate, FL 33063.** **As per Technical Specifications and Special Conditions.**	$ 10,900.00
Unit #2: **Furnish/Install (1) New Carrier 7.5-ton package unit, 11.40 EER2.** **Model #50FE-M08A2B5-0A0A0, refrigerant R-454B** **Volts/Phase 208/230/3/60, AHRI #216013097.** **Furnish/Install (1) 10.0 KW Electric Heater.** **Furnish/Install (1) Motorized outside air damper.** **Furnish/Install (1) Electrical single point kit.** **Furnish/Install one new adapter curb to existing roof curb at** **Police Dept., City Hall,** **5790 Margate Blvd., Margate, FL 33063** **As per Technical Specifications and Special Conditions.**	$ 18,370.00

Unit #3:
Furnish/Install (1) New Carrier 3-ton package unit, 13.4 SEER2.
Model #50FE-A04A2B5-0A0A0, refrigerant R-454B Volts/Phase 208/230/3/60, AHRI #214606067.
Furnish/Install (1) 5.0 KW Electric Heater.
Furnish/Install (1) Motorized outside air damper.
Furnish/Install one new adapter curb to existing roof curb at
Northwest Focal Point Senior Center,
6009 NW 10th Street,
Margate, FL 33063.
As per Technical Specifications and Special Conditions. $ 10,650.00

Unit #4:
Furnish/Install (1) New Carrier 12.5-ton package unit, 11.0 EER2.
Model #50FE-M14A3B5-0A0A0, refrigerant R-454B Volts/Phase 208/230/3/60, AHRI #216743492.
Furnish/Install (1) 10.0 KW Electric Heater.
Furnish/Install (1) Motorized outside air damper.
Furnish/Install (1) Electrical single point kit.
Furnish/Install one new adapter curb to existing roof curb at
Northwest Focal Point Senior Center,
6009 NW 10th Street,
Margate, FL 33063.
As per Technical Specifications and Special Conditions. $ 23,760.00

Unit #5:
Furnish/Install (1) 2-ton Carrier split type unit, 16.5 SEER2.
Condenser Model #26SPA624W003 and Air Handler Model #FJ5ANXB30L00, refrigerant R-454B, Volts/Phase 208/230/1/60, AHRI #214878138.
Furnish/Install (1) 5.0 KW Electric Heater.
Furnish/Install (1) one secondary drain pan.
Reconnect existing outside air duct/damper at
Margate Sports Complex,
1695 Banks Road,
Margate, FL 33063.
As per Technical Specifications and Special Conditions. $ 8,720.00

Unit #6:
Furnish/Install (1) 5-ton Carrier split type unit, 16.0 SEER2.
Condenser Model #26SPA660W003 and Air Handler Model #FJ5ANXD60L00, refrigerant R-454B, Volts/Phase 208/230/1/60, AHRI #214879870.
Furnish/Install (1) 10.0 KW Electric Heater.
Furnish/Install (1) one secondary drain pan.
Reconnect existing outside air duct/damper at

Margate Sports Complex,
1695 Banks Road,
Margate, FL 33063.
As per Technical Specifications and Special Conditions. $ 9,170.00

Obtaining City of Margate permits for all work (includes all associated fees and related service charges). $ 1,000.00

Contingency*
(*Represents possible cost for unforeseen Work, if approved by City). $5,000.00

GRAND TOTAL: $ 82,570.00

****

ALL BIDS MUST BE SIGNED WITH THE VENDOR NAME AND BY AN OFFICER OR EMPLOYEE HAVING THE AUTHORITY TO BIND THE COMPANY OR FIRM BY SIGNATURE.

SAFETY DATA SHEETS ENCLOSED? YES X NO ____

SPECIFICATION SHEETS/BROCHURES? YES X NO ____

HAVE YOUR INSURANCE REPRESENTATIVE REVIEW THE SAMPLE INSURANCE CERTIFICATE TO ENSURE COMPLIANCE.

WILL YOUR FIRM ACCEPT PAYMENT VIA A CITY OF MARGATE VISA CREDIT CARD? PLEASE CHECK ONE YES ____ NO X

BIDDER'S GENERAL INFORMATION:

The bidder shall furnish the following information. Additional sheets shall be attached as required. Failure to complete Item Nos. 1, 3, and 7 (if required) will cause the bid to be non-responsive and may cause its rejection. In any event, no award will be made until all of the Bidder's General Information (i.e., items 1 through 7 inclusive) is delivered to the City.

(1) CONTRACTOR'S name and address:

Thinking on my World Inc
14981 SW 17 Ln Miami FL 33185

(2) CONTRACTOR'S telephone number: 786-635-8114

(3) CONTRACTOR'S license: Primary classification: HVAC-A.

State License Number: CAC 182 3877.

Supplemental classifications held, if any: _____

Name of Licensee, if different from (1) above: Rafael Ramirez Cabrera.

(4) Name of person who inspected site of proposed Work for your firm:

Name: Rafael Ramirez Date of Inspection: 05/12/2025

(5) Name, address, and telephone number of Surety Company and agent who will provide the required bonds on this contract (if required): _____

N/A

(6) ATTACH TO THIS BID the experience resume of the person who will be designated as Supervisor for this project.

(7) ATTACH TO THIS BID, a financial statement **(If Required)**, references, and other information, sufficiently comprehensive to permit an appraisal of CONTRACTOR'S current financial condition.

(8) Subcontractors: The Bidder further proposes that as part of their submittal there is attached a list of subcontracting firms or businesses who will be awarded subcontracts for portions of the work in the event the bidder is awarded the Contract.

REFERENCE SHEET BID NO. 2025-009

In order to receive Bid Award consideration on the proposed bid, it is a requirement that this sheet be completed and returned with your bid/proposal. This information may be used in determining the bid award for this Project.

BIDDER (COMPANY NAME): Thinking on my world.Inc

ADDRESS: 14981 sw 17 In Miami FL 33185

CONTACT PERSON: Rafael Ramirez Cabrera TITLE: Owner/License Contractor

TELEPHONE: 786-635-8114 FACSIMILE: _____

NUMBER OF YEARS IN BUSINESS: 10+

ADDRESS OF NEAREST FACILITY: _____

LIST THREE (3) COMPANIES OR GOVERNMENTAL AGENCIES WHERE THESE PRODUCTS OR SERVICES HAVE BEEN PROVIDED IN THE LAST YEAR.

1. COMPANY NAME: Walmart Inc
   ADDRESS: _____ PHONE: 579-469-9650
   CONTACT PERSON: Yulian Ruiz TITLE: Mantenance Manager.

2. COMPANY NAME: Asia Teak Construction
   ADDRESS: _____ PHONE: 305-335-0982
   CONTACT PERSON: Teodoro Rojas TITLE: GC/ owner

3. COMPANY NAME: MAX New Company
   ADDRESS: _____ PHONE: 754-294-6457.
   CONTACT PERSON: Yunior Rojas TITLE: Owner/

COMPLIANCE WITH OCCUPATIONAL SAFETY AND HEALTH ACT (O.S.H.A.)
BID NO. 2025-009

Bidder certifies that all material, equipment, etc. contained in this bid meet all O.S.H.A. requirements. Bidder further certifies that if he/she is the successful bidder, and the material, equipment, etc., delivered is subsequently found to be deficient in any O.S.H.A. requirement in effect on date of delivery, all costs necessary to bring the material, equipment, etc. into compliance with the aforementioned requirements shall be borne by the bidder.

OCCUPATIONAL HEALTH AND SAFETY DATA SHEET REQUIRED:

In compliance with Chapter 442, Florida Statutes, any item delivered from a contract resulting from this bid must be accompanied by a SAFETY DATA SHEET (SDS). The SDS must include the following information:

A. The chemical name and the common name of the toxic substance.

B. The hazards or other risks in the use of the toxic substances, including:

1. The potential for fire, explosion, corrosivity and reactivity.

2. The known acute and chronic health effects of risks from exposure, including the medical conditions which are generally recognized as being aggravated by exposure to the toxic substance; and

3. The primary routes of entry and symptoms of overexposure.

C. The proper precautions, handling practices, necessary personal protective equipment, and other safety precautions in the use of or exposure to the toxic substances, including appropriate emergency treatment in case of overexposure.

D. The emergency procedure for spills, fire, disposal, and first aid.

E. A description in lay terms of the known specific potential health risks posed by the toxic substances intended to alert any person reading this information.

F. The year and month, if available, that the information was compiled and the name, address and emergency telephone number of the manufacturer responsible for preparing the information.

SIGNATURE:_____ DATE: 05/15/2025

DRUG-FREE WORKPLACE PROGRAM FORM BID NO. 2025-009

In accordance with Section 287.087, State of Florida Statutes, preference shall be given to businesses with Drug-free Workplace Programs. Whenever two or more bids which are equal with respect to price, quality, and service are received for the procurement of commodities or contractual service, a bid received from a business that certifies that it has implemented a Drug-free Workplace Program shall be given preference in the award process. In the event that none of the tied vendors has a Drug-free Workplace program in effect, the City reserves the right to make final Decisions in the City's best interest. In order to have a Drug-free Workplace Program, a business shall:

1. Publish a statement notifying employees that the unlawful manufacture, distribution, dispensing, possession, or use of a controlled substance is prohibited in the workplace and specifying the actions that will be taken against employees for violations of such prohibition.

2. Inform employees about the dangers of drug abuse in the workplace, the business's policy of maintaining a drug-free workplace, any available drug counseling, rehabilitation, and employee assistance programs, and the penalties that may be imposed upon employees for drug abuse violations.

3. Give each employee engaged in providing the commodities or contractual services that are under bid a copy of the statement specified in subsection (1).

4. In the statement specified in subsection (1), notify employees that, as a condition of working on the commodities or contractual services that are under bid, the employee will abide by the terms of the statement and will notify the employer of any conviction of, or plea of guilty or nolo contenders to, any violation of Chapter 893, Florida Statutes, or of any controlled substance law of the United States of any State, for a violation occurring in the workplace no later than five (5) days after such conviction.

5. Impose a sanction on, or require the satisfactory participation in a drug abuse assistance or rehabilitation program if such is available in the employee's community by any employee who is convicted.

6. Make a good faith effort to continue to maintain a drug-free workplace through implementation. If bidder's company has a Drug-free Workplace Program, so certify below:

AS THE PERSON AUTHORIZED TO SIGN THE STATEMENT, I CERTIFY THAT THIS FIRM COMPLIES FULLY WITH THE ABOVE REQUIREMENTS.

SIGNATURE OF BIDDER: _____ DATE: 05/15/2025

OFFEROR'S QUALIFICATION STATEMENT BID NO. 2025-009

The undersigned certifies under oath the truth and correctness of all statements and of all answers to questions made hereinafter:

SUBMITTED TO: City of Margate
(Purchasing Division)

ADDRESS: 5790 Margate Blvd.
Margate, FL 33063

CIRCLE ONE: Corporation Partnership **Individual** Other

SUBMITTED BY: Thinking on my world.Inc

NAME: Rafael Ramirez Cabrera

ADDRESS: 14981 sw 17 ln Miami FL 33185

TELEPHONE NO.: 786-635-8114

FACSIMILE NO.: _____

1. State the true, exact, correct and complete name of the partnership, corporation, trade or fictitious name under which you do business and the address of the place of business. (Attach corporate documents from the State of Florida (sunbiz.org) to this statement.)

The correct name of the Offeror is: _____

The address of the principal place of business is:

_____

_____

2. If Offeror is a corporation, answer the following: N/A

a. Date of Incorporation: _____

b. State of Incorporation: _____

c. President's name: _____

d. Vice President's name: _____

e. Secretary's name: _____

f. Treasurer's name: _____

g. Name and address of Resident Agent: _____

N/A

3. If Offeror is an individual or a partnership, answer the following:

a. Date of organization: _____

b. Name, address and ownership units of all partners:

Rafael Ramirez Cabrera 7666 nw 168 terrace Hialeah FL 33015 Owner 100%

c. State whether general or limited partnership: Florida

4. If Offeror is other than an individual, corporation or partnership, describe the organization and give the name and address of principals:

N/A

5. If Offeror is operating under a fictitious name, submit evidence of compliance with the Florida Fictitious Name Statute. N/A

6. How many years has your organization been in business under its present business name?

5 years

a. Under what other former names has your organization operated?

N/A

7. Indicate registration, license numbers or certificate numbers for the businesses or professions which are the subject of this Proposal. Please attach certificate of competency and/or state

registration.

CAC - 182 3877

8. Have you ever failed to complete any work awarded to you? If so, state when, where and why?

N/A

9. State the names, telephone numbers and last known addresses of three (3) owners, individuals or representatives of owners with the most knowledge of work which you have performed or goods you have provided, and to which you refer (government owners are preferred as references).

N/A

(Name) (Address) (Phone Number)

(Name) (Address) (Phone Number)

(Name) (Address) (Phone Number)

10. List the pertinent experience of the key individuals of your organization (continue on insert sheet, if necessary).

N/A

11. State the name(s) of the individual(s) who will have personal supervision of the work:

Rafael Ramirez Cabrera

THE OFFEROR ACKNOWLEDGES AND UNDERSTANDS THAT THE INFORMATION CONTAINED IN RESPONSE TO THIS QUALIFICATION STATEMENT SHALL BE RELIED UPON BY OWNER IN AWARDING THE CONTRACT AND SUCH INFORMATION IS WARRANTED BY OFFEROR TO BE TRUE. THE DISCOVERY OF ANY OMISSION OR MISSTATEMENT THAT MATERIALLY AFFECTS THE OFFEROR'S QUALIFICATIONS TO PERFORM UNDER THE CONTRACT SHALL CAUSE THE OWNER TO REJECT THE PROPOSAL, AND IF AFTER THE AWARD TO CANCEL AND TERMINATE THE AWARD AND/OR CONTRACT.

Signature: Rafael Ramirez

State of Florida

County of Miami Dade.

On this the 20 day of May, 20__, before me by means of X physical presence or ___ online notarization, the undersigned Notary Public of the State of Florida, personally appeared Rafael Ramirez Cabrera and
(Name(s) of individual(s) who appeared before notary)

whose name(s) is/are Subscribed to the within instrument, and he/she/they acknowledge that he/she/they executed it.

NOTARY PUBLIC, STATE OF FLORIDA

Orlando Llano Salazar
(Name of Notary Public: Print, Stamp or Type as Commissioned.)

NOTARY PUBLIC
SEAL OF OFFICE:

ORLANDO LLANO SALAZAR
Notary Public - State of Florida
Commission # HH 665547
My Comm. Expires Apr 16, 2029
Bonded through National Notary Assn.

☐ Personally known to me, or
☒ Produced identification:
R562-720-89-190-0
(Type of Identification Produced
☒ DID take an oath, or ☐ DID NOT take an oath

NON-COLLUSIVE AFFIDAVIT FOR BID NO. 2025-009

State of Florida)

County of Miami Dade)

Rafael Ramirez Cabrera being first duly sworn, deposes and says that:

He/she is the Owner (Owner, Partner, Officer, Representative or Agent) of Thinking on my World Inc., the Offeror that has submitted the attached Proposal;

He/she is fully informed regarding the preparation and contents of the attached Proposal and of all pertinent circumstances regarding such Proposal;

Such Proposal is genuine and is not a collusive or sham Proposal;

Neither the said Offeror nor any of its officers, partners, owners, agents, representatives, employees or parties in interest, including this affiant, have in any way colluded, conspired, connived or agreed, directly or indirectly, with any other Offeror, firm, or person to submit a collusive or sham Proposal in connection with the Work for which the attached Proposal has been submitted; or to refrain from bidding in connection with such Work; or have in any manner, directly or indirectly, sought by agreement or collusion, or communication, or conference with any Offeror, firm, or person to fix the price or prices in the attached Proposal or of any other Offeror, or to fix any overhead, profit, or cost elements of the Proposal price or the Proposal price of any other Offeror, or to secure through any collusion, conspiracy, connivance, or unlawful agreement any advantage against (Recipient), or any person interested in the proposed Work;

The price or prices quoted in the attached Proposal are fair and proper and are not tainted by any collusion, conspiracy, connivance, or unlawful agreement on the part of the Offeror or any other of its agents, representatives, owners, employees or parties in interest, including this affiant.

Signed, sealed, and delivered in the presence of:

Marie Yeiga
Witness

Fidel Balesta
Witness

By

RAFAEL RAMIREZ.
Printed Name

Owner / Lic Contractor
Title

ACKNOWLEDGMENT
NON-COLLUSIVE AFFIDAVIT FOR BID NO. 2025-009

State of Florida
County of Miami Dade

On this the 20 day of May, 2025, before me by means of X physical presence or ___ online notarization, the undersigned Notary Public of the State of Florida, personally appeared

Rafael Ramirez Cabrera.
(Name(s) of individual(s) who appeared before notary)

whose name(s) is/are Subscribed to within the instrument, and he/she/they acknowledge that he/she/they executed it.

WITNESS my hand
and official seal.

NOTARY PUBLIC, STATE OF FLORIDA

Orlando Llano Salazar
(Name of Notary Public: Print, Stamp, or Type as Commissioned)

NOTARY PUBLIC
SEAL OF OFFICE:

ORLANDO LLANO SALAZAR
Notary Public - State of Florida
Commission # HH 665547
My Comm. Expires Apr 16, 2029
Bonded through National Notary Assn.

☐ Personally known to me, or
☒ Produced identification

R562-720-89-190-0
(Type of Identification Produced)

☒ DID take an oath, or ☐ DID NOT take an oath

SCRUTINIZED COMPANIES CERTIFICATION

I hereby swear or affirm that as of the date below this company is not listed on a Scrutinized Companies list created pursuant to 215.4725, 215.473, or 287.135, Florida Statutes. Pursuant to 287.135, Florida Statutes I further affirm that:

1. This company is not participating in a boycott of Israel such that it is not refusing to deal, terminating business activities, or taking other actions to limit commercial relations with Israel, or persons or entities doing business in Israel or in Israeli-controlled territories, in a discriminatory manner.

2. This Company does not appear on the Scrutinized Companies with Activities in Sudan List where the State Board of Administration has established the following criteria:
   a. Have a material business relationship with the government of Sudan or a government- created project involving oil related, mineral extraction, or power generation activities, or
   b. Have a material business relationship involving the supply of military equipment, or
   c. Impart minimal benefit to disadvantaged citizens that are typically located in the geographic periphery of Sudan, or
   d. Have been complicit in the genocidal campaign in Darfur.

3. This Company does not appear on the Scrutinized Companies with Activities in the Iran Petroleum Energy Sector List where the State Board of Administration has established the following criteria:
   a. Have a material business relationship with the government of Iran or a government- created project involving oil related or mineral extraction activities, or
   b. Have made material investments with the effect of significantly enhancing Iran's petroleum sector.

4. This Company is not engaged in business operations in Cuba or Syria.

VENDOR/COMPANY NAME: Thinking on my world.Inc

SIGNATURE: _____

PRINTED NAME: Rafael Ramirez Cabrera

TITLE: Owner/License Contractor DATE: 05/15/2025

The scrutinized company list is maintained by the State Board of Administration and available at http://www.sbafla.com/ Type text here

CITY OF MARGATE
E-VERIFY FORM

Project Name:	Furnish and Install (6) HVAC Systems
Project No.:	BID No. 2025-009

ACKNOWLEDGEMENT

Definitions:

"Contractor" means a person or entity that has entered or is attempting to enter into a contract with a public employer to provide labor, supplies, or services to such employer in exchange for salary, wages, or other remuneration.

"Subcontractor" means a person or entity that provides labor, supplies, or services to or for a contractor or another subcontractor in exchange for salary, wages, or other remuneration.

Effective January 1, 2021, public and private employers, contractors and subcontractors will begin required registration with, and use of the E-verify system in order to verify the work authorization status of all newly hired employees. Vendor/Consultant/Contractor acknowledges and agrees to utilize the U.S. Department of Homeland Security's E-Verify System to verify the employment eligibility of:

a) All persons employed by Vendor/Consultant/Contractor to perform employment duties within Florida during the term of the contract; and

b) All persons (including subvendors/subconsultants/subcontractors) assigned by Vendor/Consultant/Contractor to perform work pursuant to the contract with the Department. The Vendor/Consultant/Contractor acknowledges and agrees that use of the U.S. Department of Homeland Security's E-Verify System during the term of the contract is a condition of the contract with the City of Margate; and

c) Should vendor become successful Contractor awarded for the above-named project, by entering into this Contract, the Contractor becomes obligated to comply with the provisions of Section 448.095, Fla. Stat., "Employment Eligibility," as amended from time to time. This includes but is not limited to utilization of the E-Verify System to verify the work authorization status of all newly hired employees, and requiring all subcontractors to provide an affidavit attesting that the subcontractor does not employ, contract with, or subcontract with, an unauthorized alien. The contractor shall maintain a copy of such affidavit for the duration of the contract. Failure to comply will lead to termination of this Contract, or if a subcontractor knowingly violates the statute, the subcontract must be terminated immediately. Any challenge to termination under this provision must be filed in the Circuit Court no later than 20 calendar days after the date of termination. If this contract is terminated for a violation of the statute by the Contractor, the Contractor may not be awarded a public contract for a period of 1 year after the date of termination and shall be liable for any additional costs incurred by the City as a result of the termination.

COMPANY CONTACT INFORMATION

Company Name:	Thinking on my World Inc.
Authorized Signature:	
Print Name:	Rafael Ramirez Cabrera.
Title	Owner / Lic Contractor.
Date:	05/15/2025
Phone:	786-635-8114.
Email:	thinkingonmyAC world@gmail.com.
Website:	

Affidavit Attesting to Noncoercive Conduct for Labor or Services

Nongovernment Entity name: Thinking on my world.Inc ("Vendor")

Vendor FEIN: 85-0530542

Address: 14981 sw 17 ln

City: Miami State: fl Zip: 33185

Phone number: 786-635-8114 Email Address: thinkingonmyacworld@gmail.com

As a nongovernmental entity executing, renewing, or extending a contract with a government entity, **Vendor** is required to provide an affidavit under penalty of perjury attesting that **Vendor** does not use coercion for labor or services in accordance with Section 787.06, Florida Statutes.

As defined in Section 787.06(2)(a), coercion means:

1. Using or threating to use physical force against any person.
2. Restraining, isolating, or confining or threating to restrain, isolate, or confine any person without lawful authority and against her or his will.
3. Using lending or other credit methods to establish a debt by any person when labor or services are pledged as a security for the debt, if the value of the labor or services as reasonably assessed is not applied toward the liquidation of the debt, the length and nature of the labor or service are not respectively limited and defined.
4. Destroying, concealing, removing, confiscating, withholding, or possessing any actual or purported passport, visa, or other immigration document, or any other actual or purported government identification document, of any person.
5. Causing or threating to cause financial harm to any person.
6. Enticing or luring any person by fraud or deceit; or
7. Providing a controlled substance as outlined in Schedule I or Schedule II of Section 893.03 to any person for the purpose of exploitation of that person.

As a person authorized to sign on behalf of **Vendor**, I certify that **Vendor** does not use coercion for labor or services in accordance with Section 787.06.

Written Declaration

Under penalties of perjury, I declare that I have read the foregoing Affidavit and that the facts stated in it are true.

By: Thinking on my world.Inc

Authorized Signature

Print Name and Title: Rafael Ramirez Cabrera Owner/ Lic Contractor

Date: 05/15/2025

AFFIDAVIT REGARDING PROHIBITION ON CONTRACTING WITH ENTITIES OF FOREIGN COUNTRIES OF CONCERN

Pursuant to Section 287.138, Florida Statutes (which is expressly incorporated herein by reference), the City may not knowingly enter into a contract with an entity which would give access to an individual's personal identifying information if (a) the entity is owned by the government of a foreign country of concern; (b) the government of a foreign country of concern has a controlling interest in the entity; or (c) the entity is organized under the laws of or has its principal place of business in a foreign country of concern.

This affidavit must be completed by an officer or representative of an entity submitting a bid, proposal, or reply to, or entering into, renewing, or extending, a contract with the City which would grant the entity access to an individual's personal identifying information.

1. Thinking on my World Inc ("entity") does not meet any of the criteria in paragraphs (2)(a) -(c) of Section 287.138, F.S.

In the presence of:

Witness #1 Print Name: Monie Veiga.

Witness #2 Print Name: EDEL BAEISTA

Under penalties of perjury, I declare that I have read the foregoing and the facts stated in it are true:

Print Name: Rafael Ramirez.
Title: Owner.
Entity Name: Thinking on my World.

OATH OR AFFIRMATION

State of Florida
County of Miami Dade.

Sworn to (or affirmed) and subscribed before me by means of ☒ physical presence or ☐ online notarization, this 20 day of May, 2025, by Rafael Ramirez (name of person) as Owner (type of authority) for Thinking on my World (name of party on behalf of whom instrument is executed).

ORLANDO LLANO SALAZAR
Notary Public - State of Florida
Commission # [illegible]
My Comm. Expires Apr 16, 2029
Bonded through National Notary Assn.

Notary Public (Print, Stamp, or Type as Commissioned)

Personally known to me; or
X Produced identification (Type of Identification: R562-720-190-0
X Did take an oath; or
Did not take an oath

ACORD®

CERTIFICATE OF LIABILITY INSURANCE

DATE (MM/DD/YYYY): 04/20/2025

THIS CERTIFICATE IS ISSUED AS A MATTER OF INFORMATION ONLY AND CONFERS NO RIGHTS UPON THE CERTIFICATE HOLDER. THIS CERTIFICATE DOES NOT AFFIRMATIVELY OR NEGATIVELY AMEND, EXTEND OR ALTER THE COVERAGE AFFORDED BY THE POLICIES BELOW. THIS CERTIFICATE OF INSURANCE DOES NOT CONSTITUTE A CONTRACT BETWEEN THE ISSUING INSURER(S), AUTHORIZED REPRESENTATIVE OR PRODUCER, AND THE CERTIFICATE HOLDER.

IMPORTANT: If the certificate holder is an ADDITIONAL INSURED, the policy(ies) must have ADDITIONAL INSURED provisions or be endorsed. If SUBROGATION IS WAIVED, subject to the terms and conditions of the policy, certain policies may require an endorsement. A statement on this certificate does not confer rights to the certificate holder in lieu of such endorsement(s).

PRODUCER
West Holiday Insurance Inc
6905 W 4th Ave
Hialeah FL 33014

CONTACT NAME: DELKYS VEGA
PHONE (A/C, No, Ext): (305) 827-5555 FAX (A/C, No):
E-MAIL ADDRESS: delkys@onlinewhi.com

INSURER(S) AFFORDING COVERAGE	NAIC #
INSURER A: BURLINGTON INSURANCE CO.	23620
INSURER B: PROGRESSIVE COMMERCIAL	24260
INSURER C:	
INSURER D:	
INSURER E:	
INSURER F:	

INSURED
THINKING ON MY WORLD INC
14981 SW 17LN
MIAMI FL 33185

COVERAGES **CERTIFICATE NUMBER:** **REVISION NUMBER:**

THIS IS TO CERTIFY THAT THE POLICIES OF INSURANCE LISTED BELOW HAVE BEEN ISSUED TO THE INSURED NAMED ABOVE FOR THE POLICY PERIOD INDICATED. NOTWITHSTANDING ANY REQUIREMENT, TERM OR CONDITION OF ANY CONTRACT OR OTHER DOCUMENT WITH RESPECT TO WHICH THIS CERTIFICATE MAY BE ISSUED OR MAY PERTAIN, THE INSURANCE AFFORDED BY THE POLICIES DESCRIBED HEREIN IS SUBJECT TO ALL THE TERMS, EXCLUSIONS AND CONDITIONS OF SUCH POLICIES. LIMITS SHOWN MAY HAVE BEEN REDUCED BY PAID CLAIMS.

INSR LTR	TYPE OF INSURANCE	ADDL INSD	SUBR WVD	POLICY NUMBER	POLICY EFF (MM/DD/YYYY)	POLICY EXP (MM/DD/YYYY)	LIMITS	
A	[X] COMMERCIAL GENERAL LIABILITY [ ] CLAIMS-MADE [X] OCCUR GEN'L AGGREGATE LIMIT APPLIES PER: [ ] POLICY [X] PRO-JECT [ ] LOC OTHER:	Y	N	535B539194	03/16/2025	03/16/2026	EACH OCCURRENCE DAMAGE TO RENTED PREMISES (Ea occurrence) MED EXP (Any one person) PERSONAL & ADV INJURY GENERAL AGGREGATE PRODUCTS - COMP/OP AGG	$ 1,000,000 $ 100,000 $ 5,000 $ 1,000,000 $ 2,000,000 $ 2,000,000 $
B	AUTOMOBILE LIABILITY [ ] ANY AUTO [ ] OWNED AUTOS ONLY [ ] HIRED AUTOS ONLY [X] SCHEDULED AUTOS [ ] NON-OWNED AUTOS ONLY	N	N	00352538	01/24/2025	01/24/2026	COMBINED SINGLE LIMIT (Ea accident) BODILY INJURY (Per person) BODILY INJURY (Per accident) PROPERTY DAMAGE (Per accident) PIP	$ 1,000,000 $ $ $ $
	[ ] UMBRELLA LIAB [ ] OCCUR [ ] EXCESS LIAB [ ] CLAIMS-MADE [ ] DED [ ] RETENTION $						EACH OCCURRENCE AGGREGATE	$ $ $
	WORKERS COMPENSATION AND EMPLOYERS' LIABILITY ANY PROPRIETOR/PARTNER/EXECUTIVE OFFICER/MEMBER EXCLUDED? Y / N [ ] (Mandatory in NH) If yes, describe under DESCRIPTION OF OPERATIONS below	N / A					[ ] PER STATUTE [ ] OTH-ER E.L. EACH ACCIDENT E.L. DISEASE - EA EMPLOYEE E.L. DISEASE - POLICY LIMIT	 $ $ $

DESCRIPTION OF OPERATIONS / LOCATIONS / VEHICLES (ACORD 101, Additional Remarks Schedule, may be attached if more space is required)

Asiatech Construction LLC IS LISTED AS ADDITIONAL INSURED.

CERTIFICATE HOLDER

Asiatech Construction LLC
4350 sw 125th lane
MIRAMAR FL 33027

CANCELLATION

SHOULD ANY OF THE ABOVE DESCRIBED POLICIES BE CANCELLED BEFORE THE EXPIRATION DATE THEREOF, NOTICE WILL BE DELIVERED IN ACCORDANCE WITH THE POLICY PROVISIONS.

AUTHORIZED REPRESENTATIVE

© 1988-2015 ACORD CORPORATION. All rights reserved.

The ACORD name and logo are registered marks of ACORD

ADDENDUM NO. 1

BID NO. 2025-009

FURNISH AND INSTALL (6) HVAC SYSTEMS

Tuesday, April 29, 2025

TO ALL BIDDERS:

Please incorporate the following information/clarifications, changes, additions, and/or deletions into the TECHNICAL SPECIFICATIONS of the bid packet for the above-referenced project:

QUESTIONS/CLARIFICATIONS:

1. **Q:** Only Carrier units listed – Can we substitute for Trane units?

   A: Substitutions can only be made if the Carrier units are unavailable. Public Works would have to approve the substitution.

2. **Q:** Are Condenser Coils Required to be coated? This is strongly encouraged to increase the lifespan of condenser units.

   A: No, this is not required. The winning bidder could submit a proposal to add this after they are awarded the Bid.

3. **Q:** Is there any Warranty Requirements? With Trane units we can include extended Parts, Labor, and refrigerant warranties to help mitigate unplanned repairs during the first few years.

   A: Only factory warranties. The winning bidder could submit a proposal to add this after they are awarded the Bid.

4. **Q:** I didn't see any controls scope. Are controls handled by a different vendor/scope?

   A: Controls are handled by our HVAC technician.

REMOVE/REPLACE:

REMOVE: Page 5

REPLACE: New page 5a into the BID package.

REASON: Bid opening time should be 11:00 AM and not 11:AM

There are no other changes at this time. The submission deadline remains Wednesday, May 22, 2025, at 11:00 A.M., local time.

Nirmala Samlal

Nirmala Samlal
Buyer I
4/29/2025

Please sign and return the acknowledgement page of this addendum by email or by fax. The original acknowledgement page is to be included with your Bid submission.

ACKNOWLEDGEMENT FORM

ADDENDUM NO. 1

BID NO. 2025-009

I acknowledge receipt of Addendum No. 1 for BID No. 2025-009, Furnish and Install (6) HVAC Systems. This addendum contains four (4) pages. Please include the original of this form in your Bid submission.

Company Name: Thinking on my world.Inc

Address: 14981 sw 17 ln Miami FL 33185

Name of Signer Rafael Ramirez Cabrera Owner / Licensee Contractor
(please print)

Signature: _____ Date: 05/05/2025

Telephone: 786-635-8114 Facsimile: _____

Please fax your completed form to (954) 935-5258 or e-mail to purchase@margatefl.com

Nirmala Samlal
Nirmala Samlal
Buyer I
4/29/2025

NOTE: The original of this form must be included with your Bid submission.

NOTICE INVITING BIDS

SUBMITTING PROPOSALS: Sealed bids will be accepted in the Purchasing Division Office, 5790 Margate Boulevard, Margate, FL 33063 until **11:00 AM., THURSDAY, MAY 22, 2025,** for a completed project to provide all materials, labor, equipment, tools, transportation, and permits. To Furnish and Install (6) HVAC Systems for the City of Margate, (2) Police Dept., City Hall, (2) Northwest Focal Point Senior Center, (2) Margate Sports Complex.

A non-mandatory Pre-Bid Meeting will be held on **WEDNESDAY, MAY 7, 2025, AT 10:00 AM** in the Commission Chambers of City Hall at 5790 Margate Blvd, Margate, FL 33063 for this bid. Site visits to the locations will be conducted immediately following the pre-bid meeting.

All bids received will be publicly opened and read at the close of bidding in the Commission Chambers of City Hall. All bidders or their representatives are invited to be present.

It will be the sole responsibility of the bidders to deliver their proposal to the Purchasing Division on or before the date and time specified. Bids received after the specified date and time will not be considered and will be returned unopened to the bidder.

NO FAXED OR ELECTRONICALLY TRANSMITTED BIDS WILL BE ACCEPTED. One original copy and one electronic version (on a USB drive) shall be submitted in a sealed envelope and plainly marked on the outside of the envelope; the bidder's name and address followed by **"SEALED BID FOR BID NO. 2025-009 "FURNISH AND INSTALL (6) HVAC SYSTEMS"** address where bid is to be delivered or mailed to, and the date and time of the bid opening.

Bids must be submitted on the Bid Proposal Form(s) provided herein. Failure to do so will be cause for the bid to be rejected. Proposals having an erasure or correction must be initialed by the bidder in ink. Bids shall be signed in ink; all quotations shall be typewritten and filled in with pen and ink.

COMPLETION OF WORK: The Work shall be completed within 45 calendar days after the commencement date stated in the Notice to Proceed or Purchase Order.

The Bidder shall guarantee the total bid price for a period of 90 calendar days from the date of bid opening.

PROJECT ADMINISTRATION: All technical questions related to the Work shall be directed to:

Mr. Glen Mammel
102 Rock Island Road
Margate, FL 33063
954-972-8126
purchase@margatefl.com

The City of Margate reserves the right to waive informalities and/or irregularities in any bid and further reserves the right to reject any and all bids and to take any other action that may be deemed necessary in its best interest.

Nirmala Samlal
Buyer I

ADDENDUM NO. 2

BID NO. 2025-009

FURNISH AND INSTALL (6) HVAC SYSTEMS

Wednesday, May 14, 2025

TO ALL BIDDERS:

Please incorporate the following information/clarifications, changes, additions, and/or deletions into the TECHNICAL SPECIFICATIONS of the bid packet for the above-referenced project:

QUESTIONS/CLARIFICATIONS:

1. **Q:** Where is the safest site location for the crane to be when delivering Units 1 & 2, Police Department and Units 3 & 4, Northwest Focal Point Senior Center?

   A: For Units 1 & 2 – Margate Blvd, in the lot east of City Hall. For Units 3 & 4 – Senior Center parking lot on NW 10th Street.

2. **Q:** Will the replacement of the security cages be necessary for Units 5 & 6, Margate Sports Complex location? Or will this be contingent on the size of the new units?

   A: Removal and installation of the cages shall be the responsibility of the bidder. Public Works will supply new cages if the old ones do not fit.

There are no other changes at this time. The submission deadline remains Wednesday, May 22, 2025, at 11:00 A.M., local time.

Nirmala Samlal

Nirmala Samlal
Buyer I
5/14/2025

Please sign and return the acknowledgement page of this addendum by email or by fax. The original acknowledgement page is to be included with your Bid submission.

ACKNOWLEDGEMENT FORM

ADDENDUM NO. 2

BID NO. 2025-009

I acknowledge receipt of Addendum No. 2 for BID No. 2025-009, Furnish and Install (6) HVAC Systems. This addendum contains two (2) pages. Please include the original of this form in your Bid submission.

Company Name: Thinking on my world.Inc

Address: 14981 sw 17 ln Miami FL 33185

Name of Signer (please print): Rafael Ramirez Cabrera V/P Licensee Contractor

Signature: Date: 05/20/2025

Telephone: 786-635-8114 Facsimile:

Please fax your completed form to (954) 935-5258 or e-mail to purchase@margatefl.com

Nirmala Samlal

Nirmala Samlal
Buyer I
5/14/2025

NOTE: The original of this form must be included with your Bid submission.

26SCA5
Comfort™ Series Single-Stage Air Conditioner with Puron Advance™ Refrigerant
1.5 To 5 Tons

Turn to the experts

Product Data

This unit has been designed utilizing Carrier's non-ozone depleting, low global warming potential Puron Advance™ refrigerant.
Air conditioners with Puron Advance™ refrigerant provide a collection of features unmatched by any other family of equipment.

NOTE: Ratings contained in this document are subject to change at any time. Always refer to the AHRI directory (www.ahridirectory.org) for the most up-to-date ratings information.

Industry leading Features / Benefits

Efficiency
- 13.8 - 17.0 SEER2 / 11.2 – 14.5 EER2
- Microchannel Technology refrigeration system
- Indoor air quality accessories available

Comfort
- System supports programmable or standard thermostat controls

Reliability
- Non-ozone depleting, low global warming potential Puron Advance™ refrigerant
- Scroll compressor
- Internal pressure relief valve
- Internal thermal overload
- Filter drier

Durability
WeatherArmor™ Protection Package:
- Solid, durable sheet metal construction
- Dense wire coil guard

Applications
- Long–line – up to 250 feet (76.20 m) total equivalent length, up to 200 feet (60.96 m) condenser above evaporator, or up to 80 ft. (24.4 m) evaporator above condenser (See Long Line Guide for more information.)
- Low ambient cooling (down to 0°F / -18°C) with approved low ambient accessory kits.

Limited Warranty
- 5-year parts limited warranty (including compressor and coil)
  10-year parts limited warranty (including compressor and coil) with timely registration*
  – Equipment must be registered within 90 days of original installation, except in jurisdictions where warranty benefits cannot be conditioned on registration.
  * Applies to original purchaser/homeowner and not available to subsequent owners except in jurisdictions where applicable laws dictate otherwise.

See warranty certificate for complete details and restrictions.

Model Number Nomenclature

1	2	3	4	5	6	7,8	9	10	11	12
N	N	A	A	A/N	N	N	A/N	A/N	A/N	N
2	**6**	**S**	**C**	**A**	**5**	**18**	**w**	**0**	**0**	**3**
Refrigerant and OD Type		OD Design Type	Tier	Major Series	SEER2	Nominal Cooling Capacity	Region	Feature	Special Feature	Voltage
26 = Puron Advance™ (R-454B) AC		S = Single Stage	C=Comfort	A = Initial Series	5=14.3 SEER2	**18** = 18,000 BTUH (1.5 Tons) **24** = 24,000 BTUH (2 Tons) **30** = 30,000 BTUH (2.5 Tons) **36** = 36,000 BTUH (3 Tons) **42** = 42,000 BTUH (3.5 Tons) **48** = 48,000 BTUH (4 Tons) **60** = 60,000 BTUH (5 Tons)	W= SW AC	0=Standard	0=Standard	3=208-230-1 or 208/230-1 5=208/230-3-60 6=460-3-60 1=575-3-60

Puron ADVANCE™

AHRI CERTIFIED™ www.ahridirectory.org

Use of the AHRI Certified TM Mark indicates a manufacturer's participation in the program For verification of certification for individual products, go to www.ahridirectory.org.

Certified System

Quality ISO 9001 SAI GLOBAL

C UL US

Energy ENERGY STAR

This product has been designed and manufactured to meet energy (ee0) criteria for energy efficiency when installed in a qualified residential home using a qualified proper refrigerant charge and proper airflow or other critical machine sensitivities and efficiency (installation of equipment meeting ENERGY STAR criteria, proper refrigerant charging and airflow manufacturer. **Failure to confirm proper charge and airflow may reduce energy efficiency and shorten equipment life.**

CATALOG ORDERING NUMBERS

Size	Model Number
18	26SCA518W003
24	26SCA524W003
30	26SCA530W003
36	26SCA536W003
42	26SCA542W003
48	26SCA548W003
60	26SCA560W003

STANDARD FEATURES

Features	18	24	30	36	42	48	60
Puron Advance™ Refrigerant	X	X	X	X	X	X	X
SEER2 (Range depending on indoor combination)	14.3 - 17.0	14.3 - 17.0	14.3 - 16.5	14.3 - 16.5	14.3 - 16.5	13.8 - 15.5	13.8 - 16.0
Scroll Compressor	X	X	X	X	X	X	X
Field Installed Filter Drier	X	X	X	X	X	X	X
Front Seating Service Valves	X	X	X	X	X	X	X
Internal Pressure Relief Valve	X	X	X	X	X	X	X
Internal Thermal Overload	X	X	X	X	X	X	X
Long Line Capability	X	X	X	X	X	X	X
Low Ambient Capability with Kit	X	X	X	X	X	X	X

Manufacturer reserves the right to change, at any time, specifications and designs without notice and without obligations.

PHYSICAL DATA

UNIT SIZE	18	24	30	36	42	48	60
COMPRESSOR TYPE	Scroll						
REFRIGERANT	Puron Advance™ (R-454B)						
Factory Charge lb (kg)*	4.2 (1.91)	4.7 (2.13)	5.5 (2.49)	6.9 (3.13)	7.2 (3.27)	5.7 (2.58)	7.9 (3.58)
COND FAN	Forward Swept or Propeller Type, Direct Drive						
Air Discharge	Vertical						
Air Qty (CFM)	2300	3600	3300	3800	4900	3100	3900
Motor HP	1/12	1/10	1/10	1/10	1/5	1/5	1/4
Motor RPM	800	825	825	825	1100	1100	1100
COND COIL							
Face Area (Sq ft)	17.7	19.8	22.0	17.7	22.0	17.7	22.0
Fins per In.	25	25	25	20	20	20	20
Rows	1	1	1	2	2	2	2
Circuits	4	4	6	8	9	8	9
VALVE CONNECT. (In. ID)							
Vapor	3/4	3/4	3/4	7/8	7/8	7/8	7/8
Liquid	3/8"						
REFRIGERANT TUBES* (In. OD)							
Rated Vapor†	5/8	3/4	3/4	7/8	7/8	7/8	1 1/8
Rated Liquid Line‡	3/8"						

*.For 15 ft. lineset
†.Units are rated with 25 ft (7.6 m) of lineset length. See Vapor Line Sizing and Cooling Capacity Loss table when using other sizes and lengths of lineset.
‡.See Liquid Line Sizing For Cooling Only Systems with Puron Advance™ Refrigerant tables.
Note: See unit Installation Instruction for proper installation.

REFRIGERANT PIPING LENGTH LIMITATIONS

Liquid Line Sizing and Maximum Total Equivalent Lengths for Cooling Only Systems with Puron Advance™ Refrigerant:

The maximum allowable length of a residential split system depends on the liquid line diameter and vertical separation between indoor and outdoor units.

See Table below for liquid line sizing and maximum lengths :

Table 1 – Maximum Total Equivalent Length
Outdoor Unit BELOW Indoor Unit

Size	Liquid Line Connection	Liquid Line Diam. (in.) w/ TXV	AC with Puron Advance™ Refrigerant Maximum Total Equivalent Length*: Outdoor unit BELOW Indoor Vertical Separation ft (m)								
			0-5 (0-1.5)	6-10 (1.8-3.0)	11-20 (3.4-6.1)	21-30 (6.4-9.1)	31-40 (9.4-12.2)	41-50 (12.5-15.2)	51-60 (15.5-18.3)	61-70 (18.6-21.3)	71-80 (21.6-24.4)
18000	3/8	1/4	150	150	125	100	100	75	--	--	--
		5/16	250	250	250	250	250	250	250	225	150
		3/8	250	250	250	250	250	250	250	250	250
24000	3/8	1/4	75	75	75	50	50	--	--	--	--
		5/16	250	250	250	250	250	225	175	125	100
		3/8	250	250	250	250	250	250	250	250	250
30000	3/8	1/4	30	--	--	--	--	--	--	--	--
		5/16	175	225	200	175	125	100	75	--	--
		3/8	250	250	250	250	250	250	250	250	250
36000	3/8	5/16	175	150	150	100	100	100	75	--	--
		3/8	250	250	250	250	250	250	250	250	250
42000	3/8	5/16	125	100	100	75	75	50	--	--	--
		3/8	250	250	250	250	250	250	250	250	150
48000	3/8	3/8	250	250	250	250	250	250	230	160	--
60000	3/8	3/8	250	250	250	225	190	150	110	--	--

*.Total equivalent length accounts for losses due to elbows or fitting. See the Long Line Guideline for details.
-- = Outside acceptable range

Table 2 – Maximum Total Equivalent Length
Outdoor Unit ABOVE Indoor Unit

Size	Liquid Line Connection	Liquid Line Diam. (in.) w/ TXV	AC with Puron Advance™ Refrigerant Maximum Total Equivalent Length*: Outdoor unit ABOVE Indoor Vertical Separation ft (m)							
			25 (7.6)	26-50 (7.9-15.2)	51-75 (15.5-22.9)	76-100 (23.2-30.5)	101-125 (30.8-38.1)	126-150 (38.4-45.7)	151-175 (46.0-53.3)	176-200 (53.6-61.0)
18000	3/8	1/4	175	250	250	250	250	250	250	250
		5/16	250	250	250	250	250	250	250	250
		3/8	250	250	250	250	250	250	250	250
24000	3/8	1/4	100	125	175	200	225	250	250	250
		5/16	250	250	250	250	250	250	250	250
		3/8	250	250	250	250	250	250	250	250
30000	3/8	1/4	30	--	--	--	--	--	--	--
		5/16	250	250	250	250	250	250	250	250
		3/8	250	250	250	250	250	250	250	250
36000	3/8	5/16	225	250	250	250	250	250	250	250
		3/8	250	250	250	250	250	250	250	250
42000	3/8	5/16	175	200	250	250	250	250	250	250
		3/8	250	250	250	250	250	250	250	250
48000	3/8	3/8	250	250	250	250	250	250	250	250
60000	3/8	3/8	250	250	250	250	250	250	250	250

*.Total equivalent length accounts for losses due to elbows or fitting. See the Long Line Guideline for details.
-- = Outside acceptable range

Table 3 – Refrigerant Charge Adjustments

Liquid Line Size	Puron Advance™ Charge oz/ft (g/m)
3/8	0.60 (17.74) (Factory charge for lineset = 9 oz / 266.16 g)
5/16	0.40 (11.83)
1/4	0.27 (7.98)

Units are factory charged for 15 ft (4.6 m) of 3/8" liquid line. The factory charge for 3/8" lineset 9 oz. (266.16 g). When using other length or diameter liquid lines, charge adjustments are required per the chart above.

Charging Formula:

[(Lineset oz/ft X total length) – (factory charge for lineset)] = charge adjustment

Example 1: System has 15 ft of lineset* using existing 1/4" liquid line. What charge adjustment is required?

Formula:(.27 oz/ft X 15ft) – (9 oz) = (-4.95) oz.

Net result is to remove 4.95 oz of refrigerant from the system

Example 2: System has 45 ft of existing 5/16" liquid line. What is the charge adjustment?

Formula:(.40 oz/ft. X 45ft) – (9 oz.) = 9 oz.

Net result is to add 9 oz of refrigerant to the system

NOTE: Conditions must be favorable for charging by subcooling method. Indoor temperature must be 70°F to 80°F (21°C to 27°C), and outdoor temperature must be 70°F to 100°F (21°C to 38°C). If outside these conditions, adjust charge for long linesets by weigh-in method.

* When applicable. Refer to Physical Data Table in this PD and to the Installation Instructions for more information.

Long Line Applications

An application is considered "Long Line" when the total equivalent tubing length exceeds 80 ft or when there is more than 35 ft. vertical separation between indoor and outdoor units. These applications require additional accessories and system modifications for reliable system operation. The maximum allowable total equivalent length is 250 ft. The maximum vertical separation is 200 ft. when outdoor unit is above indoor unit, and 80 ft. when the outdoor unit is below the indoor unit. Refer to Accessory Usage Guideline below for required accessories. See Long-Line Application Guideline for required piping and system modifications. Also, refer to table below for acceptable vapor tube diameters to minimize the cooling capacity loss.

VAPOR LINE SIZING AND COOLING CAPACITY LOSS

Acceptable vapor line diameters provide adequate oil return to the compressor while avoiding excessive capacity loss. The suction line diameters shown in the chart below are acceptable for AC systems with Puron Advance™ refrigerant:

Table 4 – Vapor Line Sizing and Cooling Capacity Losses — Puron Advance™ Refrigerant 1-Stage Air Conditioner Applications

Unit Nominal Size (Btuh)	Maximum Liquid Line Diameters (In. OD)	Acceptable Vapor Line Diameters (In. OD)	Cooling Capacity Loss (%) Total Equivalent Line Length ft. (m) 1-Stage AC with Puron Advance™								
			Total Equivalent Line Length (ft)								
			Standard Application		Long Line Application Requires Accessories						
			26-50 (7.9-15.2)	51-80 (15.5-24.4)	81-100 (24.7-30.5)	101-125 (30.8-38.1)	126-150 (38.4-45.7)	151-175 (46.0-53.3)	176-200 (53.6-61.0)	201-225 (61.3-68.6)	226-250 (68.9-76.2)
18	3/8	1/2	2	5	6	8	10	12	13	15	16
		5/8	1	2	3	4	4	5	6	7	7
		3/4	1	1	2	2	3	3	3	4	4
24	3/8	5/8	1	3	4	5	6	7	8	9	10
		3/4	1	1	2	3	3	4	4	5	5
		7/8	0	1	2	2	2	3	3	4	4
30	3/8	5/8	2	4	5	6	8	9	10	11	13
		3/4	1	2	2	3	4	4	5	6	6
		7/8	1	1	2	2	2	3	3	4	4
36	3/8	5/8	2	4	6	7	9	10	12	13	14
		3/4	1	2	3	3	4	5	6	6	7
		7/8	1	1	2	2	3	3	4	4	5
42	3/8	3/4	1	3	3	4	5	6	7	8	9
		7/8	1	2	2	3	3	4	4	5	6
		1 1/8	0	1	1	1	2	2	2	3	3
48	3/8	3/4	1	3	4	5	6	8	9	10	11
		7/8	1	2	2	3	4	4	5	6	6
		1 1/8	0	1	1	1	2	2	2	3	3
60	3/8	3/4	2	4	5	7	8	10	11	12	14
		7/8	1	2	3	4	5	6	6	7	8
		1 1/8	0	0	0	1	1	1	2	2	3
Applications in this area may be long line and may have height restrictions. See the Residential Piping and Long Line Guideline.											

ACCESSORIES

KIT NUMBER	KIT NAME	18	24	30	36	42	48	60
KSAFT0101AAA	FRZ THERM KIT	X	X	X	X	X	X	X
KAATD0101TDR	TIME DELAY KIT (90 second TDR)	X	X	X	X	X	X	X
KAATD0201TDR	TIME DELAY KIT (30 second TDR)	X	X	X	X	X	X	X
KSALA0301410	LOW AMBIENT COOLING KIT	X	X	X	X	X	X	X
KSALA1001AAA	MOTORMASTER KIT	X	X	X	X	X	X	X
KSAHS2501AAA	HARD START KIT	X	X	X	X	X	X	X
KSACY0201AAA	CYCLE PROTR KIT	X	X	X	X	X	X	X
KSASF0201AAA	SPRT FEET KIT	X	X	X	X	X	X	X
KAALS0201LLS*	SOL VALVE KIT	X	X	X	X	X	X	X
KAAWS0101AAA	WINTER ST KIT	X	X	X	X	X	X	X
KAALP0501PUR	LOW PRESSURE SW KIT	X	X	X	X	X	X	X
KAAHI0601PUR	HIGH PRESSURE SW KIT	X	X	X	X	X	X	X
KAACH1701AAA	CRKC HTR KIT	X	X	X	X			
KAACH1601AAA	CRKC HTR KIT					X	X	X
KSASH2301COP	SOUND BLKT KIT	X	X	X	X			
KSASH2401COP	SOUND BLKT KIT					X	X	X

*.Do not use hard shutoff TXV with liquid solenoid valve

X = Accessory

ACCESSORY USAGE GUIDELINE

ACCESSORY	REQUIRED FOR LOW-AMBIENT COOLING APPLICATIONS (Below 55°F/12.8°C)	REQUIRED FOR LONG LINE APPLICATIONS*	REQUIRED FOR SEA COAST APPLICATIONS (Within 2 miles/3.22 km)
Ball Bearing Fan Motor	Standard	Standard	Standard
Compressor Start Assist Capacitor and Relay	Yes	Yes	No
Crankcase Heater	Yes	Yes	No
Evaporator Freeze Thermostat	Yes	No	No
Hard Shut-Off TXV	Yes	Yes	Yes
Liquid Line Solenoid Valve	No	No	No
MotorMaster® Control or Low-Ambient Pressure Switch	Yes	No	No
Support Feet	Recommended	No	Recommended
Winter Start Control	Yes†	No	No

*.For tubing set lengths between 80 and 200 ft. (24 and 61 m) horizontal or 35 ft. (10.7 m) vertical differential (total equivalent length), refer to the Residential Split-System Long Line Application Guideline.
†.Required if Low Pressure Switch is factory or field installed.

Accessory Description and Usage (Listed Alphabetically)

1. Ball-Bearing Fan Motor

A fan motor with ball bearings which permits speed reduction while maintaining bearing lubrication.

Usage Guideline:

Required on all units when MotorMaster® is used.

2. Compressor Start Assist - Capacitor and Relay

Start capacitor and relay gives a ”hard” boost to compressor motor at each start up.

Usage Guideline:

Required for single-phase scroll compressors in the following applications:

Long line

Low ambient cooling

Suggested for all compressors in areas with a history of low voltage problems.

3. Crankcase Heater

An electric resistance heater which mounts to the base of the compressor to keep the lubricant warm during off cycles. Improves compressor lubrication on restart and minimizes the chance of liquid slugging.

Usage Guideline:

Required in low ambient cooling applications.

Required in long line applications.

Suggested in all commercial applications.

4. Cycle Protector

The cycle protector is designed to prevent compressor short cycling. This control provides an approximate 5-minute delay after power to the compressor has been interrupted for any reason, including power outage, protector control trip, thermostat jiggling, or normal cycling.

5. Evaporator Freeze Thermostat

An SPST temperature-actuated switch that stops unit operation when evaporator reaches freeze-up conditions.

Usage Guideline:

Required when low ambient kit has been added.

6. Low-Ambient Pressure Switch Kit

A long life pressure switch which is mounted to outdoor unit service valve. It is designed to cycle the outdoor fan motor in order to maintain head pressure within normal operating limits (approximately 100 psig to 225 psig). The control will maintain working head pressure at low-ambient temperatures down to 0°F (-18°C) when properly installed and also using wind baffles. Instructions provided in accessory kit.

Usage Guideline:

A Low-Ambient Pressure Switch or MotorMaster® Low-Ambient Controller must be used when cooling operation is used at outdoor temperatures below 55°F (12.8°C).

7. MotorMaster® Low-Ambient Controller

A fan-speed control device activated by a temperature sensor, designed to control condenser fan motor speed in response to the saturated, condensing temperature during operation in cooling mode only. For outdoor temperatures down to –10°F/–23.3°C), it maintains condensing temperature at 100°F ±10°F (37.8°C ±5.5°C).

Usage Guideline:

A MotorMaster® Low Ambient Controller or Low-Ambient Pressure Switch must be used when cooling operation is used at outdoor temperatures below 55°F (12.8°C).

Suggested for all commercial applications.

8. Sound Hood

Wraparound sound reducing cover for the compressor. Reduces the sound level of the compressor.

Usage Guideline:

Suggested when unit is installed closer than 15 ft (4.57 m) to quiet areas, bedrooms, etc.

Suggested when unit is installed between two houses less than 10 ft (3 m) apart.

Manufacturer reserves the right to change, at any time, specifications and designs without notice and without obligations.

Accessory Description and Usage (Listed Alphabetically) Continued

9. Support Feet

Four or five stick-on plastic feet that raise the unit 4 in. (101.6 mm) above the mounting pad. This allows sand, dirt, and other debris to be flushed from the unit base, minimizing corrosion.

Usage Guideline:

Suggested in the following applications:

Coastal installations.

Windy areas or where debris is normally circulating.

Rooftop installations.

For improved sound ratings.

10. Time-Delay Relay

An SPST delay relay which briefly continues operation of indoor blower motor to provide additional cooling after the compressor cycles off.

NOTE: Most indoor unit controls include this feature. For those that do not, use the guideline below.

Usage Guideline:

For improved efficiency ratings for certain combinations of indoor and outdoor units. Refer to AHRI Directory of Certified Product Performance (AHRI Directory).

When a Time-Delay Relay (TDR) is called for in the AHRI Directory, use a 30 second TDR for MicroChannel Indoor units and use a 90 second TDR for Round Tube Plate Fin Indoor units.

11. Winter Start Control

This control is designed to alleviate nuisance opening of the low-pressure switch by bypassing it for the first 3 minutes of operation.

AHRI RATINGS

NOTE: Ratings contained in this document are subject to change at any time.

For AHRI ratings certificates, please refer to the AHRI directory www.ahridirectory.org

Additional ratings and system combinations can be accessed via the Ratings Database here: www.MyCarrierRatings.com

Electrical Data

UNIT SIZE	V/PH	OPER VOLTS*		COMPR		FAN	MCA	MAX FUSE† or CKT BRK AMPS
		MAX	MIN	LRA	RLA	FLA		
18	208/230/1	253	197	41.5	8.3	0.5	10.9	15.0
24				60.2	10.3	0.7	13.6	20.0
30				75.6	12.7	0.6	16.5	25.0
36				75.0	13.5	0.7	17.6	30.0
42				123.0	17.3	1.05	22.7	40.0
48				126.0	22.4	1.05	29.1	50.0
60				157.0	23.7	1.52	31.1	50.0

*.Permissible limits of the voltage range at which the unit will operate satisfactorily
†.Time-Delay fuse.

FLA- Full Load Amps
LRA - Locked Rotor Amps
MCA- Minimum Circuit Amps
RLA- Rated Load Amps
NOTE:Control circuit is 24V on all units and requires external power source. Copper wire must be used from service disconnect to unit.
All motors/compressors contain internal overload protection.

A–Weighted Sound Power (dBA) without Sound Shield

UNIT SIZE	STANDARD RATING	TYPICAL OCTAVE BAND SPECTRUM (without tone adjustment)						
		125	250	500	1000	2000	4000	8000
18	72	53	58	64	70	64	60	55
24	73	53	60	66	69	67	62	56
30	71	53	56	63	68	63	57	53
36	72	52	57	63	70	63	57	53
42	75	56	62	67	72	66	64	60
48	75	57	65	69	71	67	64	59
60	75	60	64	69	71	66	64	65

A–Weighted Sound Power (dBA) with Accessory Sound Shield

UNIT SIZE	STANDARD RATING	TYPICAL OCTAVE BAND SPECTRUM (without tone adjustment)						
		125	250	500	1000	2000	4000	8000
18	71	52	58	63	69	63	59	53
24	71	53	59	65	67	65	58	52
30	69	53	56	63	65	61	54	48
36	70	51	57	63	68	60	54	49
42	74	57	62	67	71	65	62	58
48	75	57	65	69	70	67	64	60
60	75	61	64	69	71	66	62	60

NOTE: Tested in compliance with AHRI 270 but not listed with AHRI.

Charging Subcooling (TXV-Type Expansion Device)

UNIT SIZE	REQUIRED SUBCOOLING (F)	Indoor
18	5	TXV
24	5	
30	6	
36	8	
42	6	
48	8	
60	11	

DIMENSIONS

UNIT	SERIES	ELECTRICAL CHARACTERISTICS				A		B		C		D		E		F		G		H		I		J		K		OPERATING WEIGHT		SHIPPING WEIGHT		SHIPPING LENGTH / WIDTH (Sq.)		SHIPPING HEIGHT	
						INCH	MM	INCH	MM	INCH	MM	INCH	MM	INCH	MM	INCH	MM	INCH	MM	INCH	MM	INCH	MM	INCH	MM	INCH	MM	Lbs	Kgs	Lbs	Kgs	INCH	MM	INCH	MM
26SCA518W*0	0	Y	N	N	N	31 3/16	792.5	32 1/16	815.1	3/4	19.1	6 9/16	166.1	24 11/16	626.3	9 1/8	231.3	5/16	7.9	3	76.2	13	330.2	13 3/4	349.3	17	431.8	131	59.4	150	68.0	34 1/4	870.0	36 7/16	925.1
26SCA524W*0	0	Y	N	N	N	31 3/16	792.5	35 1/2	901.4	3/4	19.1	6 9/16	166.1	24 11/16	626.3	9 1/8	231.3	5/16	7.9	3	76.2	15	381.0	16 1/4	412.8	18	457.2	143	64.9	164	74.4	34 1/4	870.0	39 13/16	1011.2
26SCA530W*0	0	Y	N	N	N	31 3/16	792.5	38 7/8	987.8	3/4	19.1	6 9/16	166.1	24 11/16	626.3	9 1/8	231.3	5/16	7.9	3	76.2	15 1/4	387.4	16 3/4	425.5	18	457.2	149	67.6	169	76.7	34 1/4	870.0	43 1/4	1099.0
26SCA536W*0	0	Y	N	N	N	31 3/16	792.5	32 1/16	815.1	7/8	22.2	6 9/16	166.1	24 11/16	626.3	9 1/8	231.3	5/16	7.9	3	76.2	15 1/2	393.7	15	381.0	14	355.6	158	71.7	177	80.3	34 1/4	870.0	36 7/16	925.1
26SCA542W*0	0	Y	N	N	N	31 3/16	792.5	38 7/8	987.8	7/8	22.2	6 9/16	166.1	24 11/16	626.3	9 1/8	231.3	5/16	7.9	3	76.2	15 3/4	400.1	17 1/4	438.2	19	482.6	196	88.9	216	98.0	34 1/4	870.0	43 1/4	1099.0
26SCA548W*0	0	Y	N	N	N	31 3/16	792.5	32 1/16	815.1	7/8	22.2	6 9/16	166.1	24 11/16	626.3	9 1/8	231.3	5/16	7.9	3	76.2	13 3/4	349.3	14 1/2	368.3	15 1/4	387.4	180	81.6	199	90.3	34 1/4	870.0	36 7/16	925.1
26SCA560W*0	0	Y	N	N	N	31 3/16	792.5	38 7/8	987.8	7/8	22.2	6 9/16	166.1	24 11/16	626.3	9 1/8	231.3	5/16	7.9	3	76.2	15 3/4	400.1	16 1/2	419.1	19 1/4	489.0	196	88.9	216	98.0	34 1/4	870.0	43 1/4	1099.0
		208-230-1-60	208/230-3-60	460-3-60	575-3-60	Y=YES N=NO																													

NOTES:

1. CENTER OF GRAVITY ⊕ .

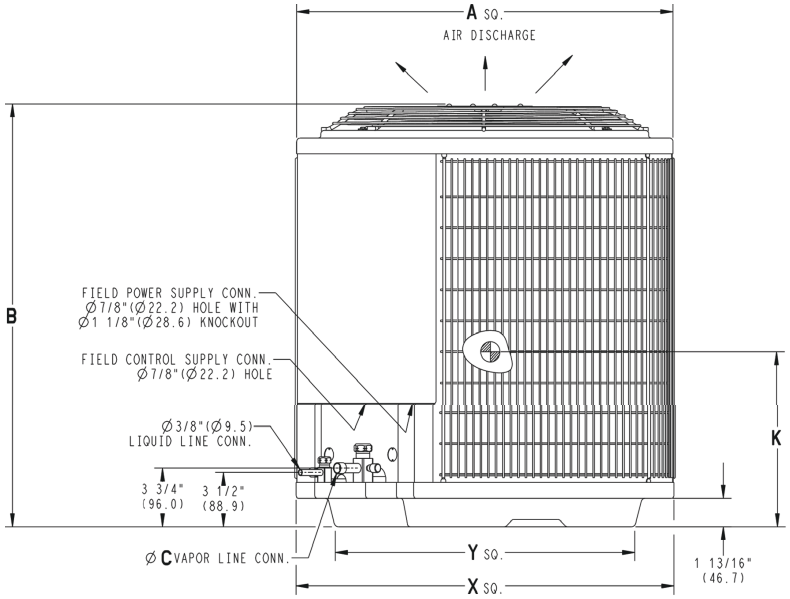

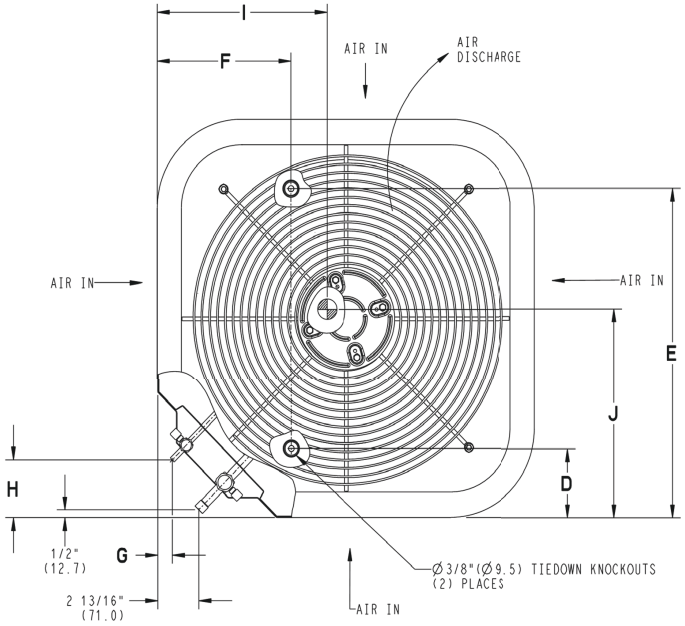

UNIT SIZE	"X" MINIMUM GROUND MOUNTING PAD APPLICATION DIMENSIONS		"Y" MINIMUM ROOF-TOP MOUNTING PAD APPLICATION DIMENSIONS	
-	23 1/8	587.3	17 7/8	454.6
-	25 3/4	654.0	20 7/16	518.5
18,24,30,36,42,48,60	31 3/16	792.5	22 15/16	583.2
-	35	889.0	26 3/4	679.7

NOTE: ALL DIMENSIONS IN INCH (MM)

U.S. ECCN: Not Subject to Regulation (N.S.R.)

SD5991-4-26SCA5 NEW REV.

Manufacturer reserves the right to change, at any time, specifications and designs without notice and without obligations.

CLEARANCES

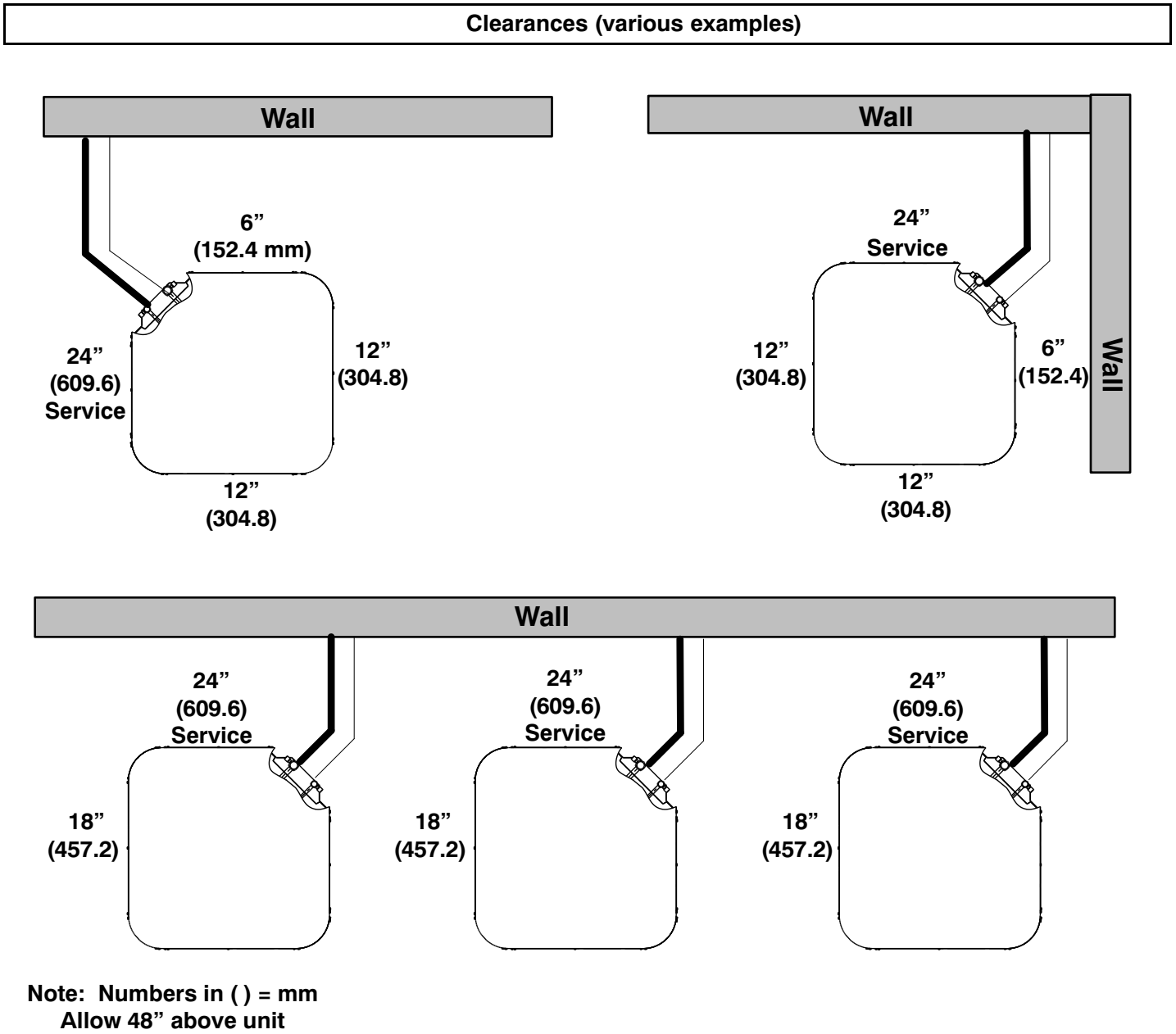

IMPORTANT: When installing multiple units in an alcove, roof well, or partially enclosed area, ensure there is adequate ventilation to prevent re-circulation of discharge air.

DETAILED COOLING CAPACITIES#

EVAPORATOR AIR		CONDENSER ENTERING AIR TEMPERATURES °F (°C)																	
		75 (23.9)			85 (29.4)			95 (35)			105 (40.6)			115 (46.1)			125 (51.7)		
CFM	EWB	Capacity MBtuh		Total System kW**	Capacity MBtuh		Total System kW**	Capacity MBtuh		Total System kW**	Capacity MBtuh		Total System kW**	Capacity MBtuh		Total System kW**	Capacity MBtuh		Total System kW**
		Total	Sens‡		Total	Sens‡		Total	Sens‡		Total	Sens‡		Total	Sens‡		Total	Sens‡	
26SCA518W003 Outdoor Section With CVAVA1917XM* Indoor Section																			
525	72 (22.2)	21.12	10.13	1.20	20.29	9.81	1.34	19.46	9.50	1.49	18.57	9.15	1.66	17.55	8.78	1.86	16.44	8.36	2.08
	67 (19.4)	19.32	12.33	1.21	18.54	12.01	1.35	17.75	11.67	1.50	16.90	11.31	1.67	15.94	10.89	1.87	14.91	10.47	2.09
	63 (17.2)††	17.88	11.86	1.23	17.13	11.52	1.36	16.35	11.15	1.51	15.49	10.74	1.68	14.61	10.33	1.87	13.64	9.91	2.09
	62 (16.7)	17.63	14.48	1.23	16.88	14.13	1.36	16.13	13.79	1.51	15.32	13.42	1.68	14.45	13.02	1.88	13.52	12.47	2.10
	57 (13.9)	16.95	16.95	1.23	16.36	16.36	1.37	15.70	15.70	1.51	15.03	15.03	1.68	14.34	14.34	1.88	13.56	13.56	2.10
600	72 (22.2)	21.57	10.52	1.23	20.74	10.21	1.37	19.85	9.88	1.53	18.92	9.51	1.70	17.88	9.14	1.90	16.72	8.71	2.12
	67 (19.4)	19.76	13.00	1.25	18.96	12.66	1.38	18.13	12.32	1.54	17.25	11.95	1.71	16.29	11.53	1.90	15.17	11.06	2.13
	63 (17.2)††	18.30	12.48	1.26	17.51	12.12	1.40	16.70	11.73	1.55	15.86	11.36	1.72	14.91	10.93	1.91	13.90	10.49	2.13
	62 (16.7)	18.07	15.48	1.26	17.26	15.07	1.40	16.48	14.73	1.55	15.65	14.35	1.72	14.96	14.96	1.91	14.10	14.10	2.13
	57 (13.9)	17.71	17.71	1.26	17.02	17.02	1.40	16.39	16.39	1.55	15.67	15.67	1.72	14.94	14.94	1.91	14.05	14.05	2.13
675	72 (22.2)	21.93	10.87	1.26	21.06	10.55	1.40	20.17	10.22	1.56	19.17	9.83	1.73	18.13	9.47	1.93	16.94	9.02	2.16
	67 (19.4)	20.10	13.61	1.28	19.27	13.27	1.42	18.40	12.90	1.57	17.48	12.53	1.75	16.47	12.10	1.94	15.36	11.65	2.16
	63 (17.2)††	18.62	13.05	1.29	17.79	12.65	1.43	16.97	12.30	1.58	16.10	11.92	1.75	15.09	11.39	1.95	14.08	11.01	2.17
	62 (16.7)	18.35	16.32	1.30	17.59	16.04	1.43	16.73	16.73	1.58	16.23	16.23	1.75	15.46	15.46	1.95	14.56	14.56	2.17
	57 (13.9)	18.33	18.33	1.30	17.63	17.63	1.43	16.97	16.97	1.58	16.17	16.17	1.75	15.38	15.38	1.95	14.45	14.45	2.17
26SCA524W003 Outdoor Section With CVAVA2414XM* Indoor Section																			
700	72 (22.2)	26.92	13.27	1.56	25.83	12.82	1.73	24.73	12.38	1.92	23.54	11.90	2.13	22.31	11.35	2.38	20.90	10.80	2.66
	67 (19.4)	24.52	15.94	1.58	23.56	15.50	1.74	22.55	15.05	1.93	21.39	14.51	2.14	20.28	13.97	2.39	19.03	13.40	2.67
	63 (17.2)††	22.61	15.33	1.59	21.71	14.90	1.75	20.76	14.41	1.94	19.75	13.91	2.15	18.66	13.38	2.40	17.50	12.81	2.68
	62 (16.7)	22.29	18.55	1.59	21.41	18.10	1.75	20.48	17.63	1.94	19.48	17.12	2.15	18.41	16.58	2.40	17.27	16.02	2.68
	57 (13.9)	21.35	21.35	1.59	20.64	20.64	1.75	19.86	19.86	1.94	19.08	19.08	2.15	18.19	18.19	2.40	17.27	17.27	2.68
750	72 (22.2)	27.25	13.50	1.59	26.14	13.05	1.75	25.01	12.59	1.94	23.79	12.11	2.15	22.50	11.55	2.40	21.11	11.03	2.68
	67 (19.4)	24.83	16.31	1.60	23.84	15.88	1.76	22.80	15.40	1.95	21.68	14.88	2.16	20.50	14.37	2.41	19.19	13.75	2.69
	63 (17.2)††	22.90	15.69	1.61	21.98	15.24	1.77	20.98	14.73	1.96	19.96	14.24	2.17	18.81	13.69	2.42	17.65	13.13	2.70
	62 (16.7)	22.58	19.07	1.61	21.67	18.62	1.77	20.71	18.15	1.96	19.69	17.63	2.17	18.60	17.08	2.42	17.66	16.60	2.70
	57 (13.9)	21.80	21.80	1.61	21.06	21.06	1.77	20.26	20.26	1.96	19.45	19.45	2.17	18.52	18.52	2.42	17.58	17.58	2.70
900	72 (22.2)	28.02	14.10	1.65	26.84	13.63	1.82	25.64	13.16	2.01	24.34	12.65	2.22	22.98	12.10	2.47	21.48	11.46	2.75
	67 (19.4)	25.57	17.36	1.67	24.49	16.88	1.83	23.37	16.36	2.02	22.18	15.83	2.23	20.94	15.29	2.48	19.57	14.63	2.76
	63 (17.2)††	23.59	16.65	1.68	22.56	16.12	1.84	21.54	15.65	2.03	20.42	15.06	2.24	19.26	14.56	2.49	17.96	13.84	2.77
	62 (16.7)	23.24	20.55	1.68	22.26	20.06	1.84	21.27	19.63	2.03	20.17	19.06	2.24	19.03	19.03	2.49	18.29	18.29	2.77
	57 (13.9)	22.88	22.88	1.68	22.10	22.10	1.84	21.26	21.26	2.03	20.34	20.34	2.24	19.38	19.38	2.48	18.22	18.22	2.77

Manufacturer reserves the right to change, at any time, specifications and designs without notice and without obligations.

DETAILED COOLING CAPACITIES#

EVAPORATOR AIR		CONDENSER ENTERING AIR TEMPERATURES °F (°C)																	
		75 (23.9)			85 (29.4)			95 (35)			105 (40.6)			115 (46.1)			125 (51.7)		
CFM	EWB	Capacity MBtuh		Total System kW**	Capacity MBtuh		Total System kW**	Capacity MBtuh		Total System kW**	Capacity MBtuh		Total System kW**	Capacity MBtuh		Total System kW**	Capacity MBtuh		Total System kW**
		Total	Sens‡		Total	Sens‡		Total	Sens‡		Total	Sens‡		Total	Sens‡		Total	Sens‡	
26SCA530W003 Outdoor Section With CVAVA3117XM* Indoor Section																			
850	72 (22.2)	35.15	17.35	2.07	33.76	16.82	2.27	32.32	16.27	2.50	30.75	15.68	2.76	28.97	15.02	3.06	27.08	14.31	3.39
	67 (19.4)	32.06	21.15	2.07	30.75	20.58	2.28	29.40	20.00	2.51	27.98	19.39	2.77	26.44	18.76	3.07	24.74	18.07	3.40
	63 (17.2)††	29.69	20.39	2.07	28.43	19.80	2.29	27.17	19.21	2.52	25.86	18.62	2.78	24.41	17.98	3.08	22.88	17.29	3.41
	62 (16.7)	29.18	24.83	2.08	27.95	24.25	2.29	26.71	23.67	2.52	25.41	23.07	2.79	24.05	22.48	3.09	22.52	22.52	3.42
	57 (13.9)	28.10	28.10	2.08	27.13	27.13	2.29	26.15	26.15	2.53	25.12	25.12	2.79	23.95	23.95	3.08	22.72	22.72	3.41
1000	72 (22.2)	36.06	18.22	2.14	34.61	17.68	2.34	33.08	17.11	2.57	31.43	16.50	2.83	29.55	15.80	3.13	27.65	15.13	3.46
	67 (19.4)	32.92	22.54	2.15	31.55	21.96	2.35	30.12	21.37	2.58	28.60	20.74	2.84	26.97	20.09	3.14	25.17	19.36	3.48
	63 (17.2)††	30.50	21.68	2.15	29.18	21.08	2.36	27.85	20.49	2.59	26.45	19.86	2.86	24.94	19.18	3.15	23.27	18.46	3.49
	62 (16.7)	29.98	26.80	2.15	28.68	26.21	2.36	27.38	25.66	2.60	26.07	26.07	2.86	25.12	25.12	3.15	23.71	23.71	3.49
	57 (13.9)	29.61	29.61	2.15	28.56	28.56	2.36	27.48	27.48	2.59	26.32	26.32	2.86	25.06	25.06	3.15	23.72	23.72	3.48
1125	72 (22.2)	36.63	18.87	2.20	35.12	18.31	2.40	33.53	17.73	2.63	31.83	17.11	2.89	29.88	16.38	3.18	27.93	15.70	3.52
	67 (19.4)	33.44	23.61	2.21	32.03	23.02	2.41	30.55	22.42	2.64	28.98	21.80	2.90	26.85	20.79	3.20	25.42	20.38	3.54
	63 (17.2)††	31.01	22.67	2.21	29.64	22.07	2.42	28.25	21.46	2.65	26.80	20.83	2.92	25.23	20.16	3.21	23.52	19.42	3.55
	62 (16.7)	30.48	28.37	2.21	29.24	27.99	2.42	28.35	28.35	2.65	27.15	27.15	2.91	25.84	25.84	3.21	24.39	24.39	3.54
	57 (13.9)	30.60	30.60	2.21	29.49	29.49	2.42	28.31	28.31	2.65	27.12	27.12	2.91	25.79	25.79	3.21	24.32	24.32	3.55
26SCA536W003 Outdoor Section With CVAVA3721XM*Indoor Section																			
1000	72 (22.2)	40.83	19.76	2.33	39.03	19.08	2.60	37.05	18.33	2.87	34.94	17.55	3.17	32.76	16.65	3.52	30.44	15.91	3.96
	67 (19.4)	37.20	24.05	2.34	35.58	23.35	2.62	33.80	22.60	2.89	31.90	21.81	3.19	29.90	20.99	3.54	27.87	20.14	3.97
	63 (17.2)††	34.44	23.19	2.35	32.96	22.51	2.63	31.33	21.76	2.90	29.58	20.98	3.20	27.74	20.17	3.54	25.84	19.33	3.97
	62 (16.7)	33.81	28.18	2.35	32.35	27.49	2.63	30.75	26.74	2.90	29.04	25.95	3.20	27.28	25.23	3.54	26.28	24.33	3.97
	57 (13.9)	32.70	32.70	2.35	31.54	31.54	2.63	30.24	30.24	2.90	28.86	28.86	3.20	27.38	27.38	3.54	25.82	25.82	3.97
1200	72 (22.2)	42.01	20.80	2.42	40.05	20.08	2.68	37.93	19.30	2.96	35.67	18.48	3.26	33.34	17.65	3.61	30.91	16.78	4.05
	67 (19.4)	38.27	25.72	2.44	36.52	25.00	2.71	34.61	24.23	2.98	32.58	23.41	3.28	30.45	22.54	3.64	28.32	21.67	4.07
	63 (17.2)††	35.45	24.75	2.45	33.85	24.04	2.72	32.10	23.27	2.99	30.23	22.46	3.29	28.29	21.49	3.64	26.24	20.71	4.07
	62 (16.7)	34.79	30.53	2.45	33.24	29.84	2.72	31.52	29.08	3.00	29.82	29.82	3.29	28.65	28.65	3.64	26.91	26.91	4.07
	57 (13.9)	34.43	34.43	2.45	33.16	33.16	2.72	31.75	31.75	3.00	30.22	30.22	3.29	28.61	28.61	3.64	26.87	26.87	4.07
1350	72 (22.2)	42.64	21.48	2.48	40.60	20.74	2.75	38.38	19.94	3.02	36.05	19.11	3.33	33.63	18.25	3.68	31.13	17.37	4.12
	67 (19.4)	38.85	26.87	2.51	37.02	26.13	2.78	35.03	25.34	3.05	32.92	24.49	3.35	30.72	23.38	3.71	28.40	22.58	4.14
	63 (17.2)††	36.00	25.81	2.52	34.33	25.09	2.79	32.50	24.30	3.07	30.55	23.46	3.37	28.53	22.60	3.72	26.35	21.56	4.14
	62 (16.7)	35.34	32.21	2.52	33.75	31.59	2.80	32.68	32.68	3.07	31.05	31.05	3.36	29.30	29.30	3.71	27.50	27.50	4.14
	57 (13.9)	35.50	35.50	2.52	34.14	34.14	2.79	32.64	32.64	3.07	31.02	31.02	3.36	29.28	29.28	3.71	27.47	27.47	4.14

Manufacturer reserves the right to change, at any time, specifications and designs without notice and without obligations.

DETAILED COOLING CAPACITIES#

EVAPORATOR AIR		CONDENSER ENTERING AIR TEMPERATURES °F (°C)																	
		75 (23.9)			85 (29.4)			95 (35)			105 (40.6)			115 (46.1)			125 (51.7)		
CFM	EWB	Capacity MBtuh		Total System kW**	Capacity MBtuh		Total System kW**	Capacity MBtuh		Total System kW**	Capacity MBtuh		Total System kW**	Capacity MBtuh		Total System kW**	Capacity MBtuh		Total System kW**
		Total	Sens‡		Total	Sens‡		Total	Sens‡		Total	Sens‡		Total	Sens‡		Total	Sens‡	
26SCA542W003 Outdoor Section With CVAVA4217XM*Indoor Section																			
1200	72 (22.2)	47.99	24.43	2.81	46.07	23.65	3.10	43.99	22.81	3.43	41.69	21.91	3.80	39.21	20.91	4.23	36.53	19.87	4.71
	67 (19.4)	43.60	29.56	2.80	41.87	28.75	3.09	40.00	27.90	3.42	37.98	26.96	3.79	35.75	25.96	4.22	33.31	24.91	4.71
	63 (17.2)††	40.30	28.51	2.80	38.70	27.71	3.09	36.99	26.86	3.41	35.13	25.95	3.79	33.09	24.98	4.22	30.85	23.91	4.71
	62 (16.7)	39.55	34.47	2.80	37.98	33.67	3.09	36.29	32.82	3.41	34.47	31.91	3.79	32.47	30.95	4.22	30.37	29.97	4.70
	57 (13.9)	38.07	38.07	2.80	36.80	36.80	3.08	35.46	35.46	3.41	34.01	34.01	3.79	32.39	32.39	4.22	30.57	30.57	4.71
1400	72 (22.2)	49.23	25.48	2.90	47.17	24.65	3.19	44.96	23.78	3.53	42.56	22.83	3.90	39.95	21.82	4.33	37.10	20.73	4.81
	67 (19.4)	44.73	31.19	2.90	42.88	30.36	3.19	40.89	29.48	3.52	38.73	28.52	3.89	36.38	27.50	4.32	33.82	26.38	4.81
	63 (17.2)††	41.35	30.02	2.90	39.65	29.20	3.18	37.82	28.32	3.51	35.84	27.37	3.89	33.69	26.32	4.32	31.32	25.28	4.80
	62 (16.7)	40.56	36.75	2.90	38.89	35.92	3.18	37.10	35.04	3.51	35.19	34.18	3.89	33.15	33.32	4.31	31.71	31.71	4.80
	57 (13.9)	39.76	39.76	2.90	38.42	38.42	3.18	36.98	36.98	3.51	35.39	35.39	3.89	33.64	33.64	4.32	31.66	31.66	4.80
1575	72 (22.2)	50.07	26.30	2.99	47.91	25.44	3.28	45.60	24.54	3.61	43.07	23.57	3.99	40.34	22.50	4.42	37.44	21.41	4.90
	67 (19.4)	45.49	32.54	2.99	43.55	31.69	3.27	41.47	30.78	3.60	39.23	29.79	3.98	36.78	28.73	4.41	34.06	27.53	4.89
	63 (17.2)††	42.07	31.28	2.98	40.28	30.43	3.27	38.37	29.54	3.60	36.30	28.56	3.97	34.07	27.54	4.40	31.54	26.32	4.89
	62 (16.7)	41.25	38.65	2.98	39.51	37.80	3.27	37.66	36.96	3.60	35.61	35.61	3.97	34.52	34.52	4.40	32.45	32.45	4.89
	57 (13.9)	41.01	41.01	2.98	39.59	39.59	3.27	38.05	38.05	3.60	36.36	36.36	3.97	34.48	34.48	4.40	32.25	32.25	4.88
26SCA548W003 Outdoor Section With CVAVA4821XM*Indoor Section																			
1400	72 (22.2)	55.90	27.60	3.41	53.55	26.66	3.77	50.94	25.64	4.19	48.06	24.54	4.66	44.88	23.30	5.19	41.20	21.94	5.79
	67 (19.4)	50.93	33.48	3.39	48.83	32.54	3.74	46.50	31.50	4.15	43.91	30.36	4.62	41.01	29.09	5.15	37.70	27.69	5.75
	63 (17.2)††	47.24	32.38	3.38	45.30	31.44	3.72	43.15	30.41	4.13	40.77	29.29	4.59	38.08	28.02	5.12	35.09	26.69	5.73
	62 (16.7)	46.39	39.20	3.37	44.47	38.23	3.72	42.38	37.22	4.12	40.03	36.08	4.59	37.41	34.84	5.12	34.91	34.91	5.72
	57 (13.9)	44.68	44.68	3.37	43.18	43.18	3.71	41.49	41.49	4.12	39.58	39.58	4.58	37.41	37.41	5.12	34.99	34.99	5.73
1600	72 (22.2)	57.04	28.56	3.51	54.55	27.60	3.87	51.82	26.56	4.29	48.80	25.41	4.76	45.46	24.16	5.30	41.81	22.80	5.90
	67 (19.4)	52.02	35.05	3.49	49.79	34.07	3.85	47.34	33.00	4.26	44.61	31.82	4.72	41.57	30.54	5.26	38.23	29.13	5.86
	63 (17.2)††	48.25	33.84	3.48	46.20	32.87	3.82	43.94	31.80	4.23	41.44	30.64	4.70	38.64	29.35	5.23	35.53	27.96	5.83
	62 (16.7)	47.37	41.39	3.47	45.36	40.42	3.82	43.15	39.37	4.22	40.70	38.22	4.69	38.62	38.62	5.23	36.04	36.04	5.84
	57 (13.9)	46.37	46.37	3.47	44.75	44.75	3.82	42.91	42.91	4.22	40.88	40.88	4.69	38.59	38.59	5.23	35.99	35.99	5.83
1800	72 (22.2)	57.93	29.47	3.61	55.36	28.49	3.97	52.50	27.41	4.39	49.37	26.23	4.87	45.91	24.95	5.40	42.13	23.54	6.00
	67 (19.4)	52.86	36.53	3.59	50.54	35.52	3.95	47.97	34.43	4.36	45.13	33.23	4.83	41.98	31.91	5.36	38.53	30.48	5.96
	63 (17.2)††	49.05	35.21	3.57	46.91	34.21	3.92	44.55	33.12	4.33	41.94	31.93	4.80	39.09	30.65	5.33	35.83	29.22	5.93
	62 (16.7)	48.14	43.50	3.57	46.05	42.51	3.92	43.75	41.46	4.33	42.07	42.07	4.80	39.56	39.56	5.34	36.83	36.83	5.94
	57 (13.9)	47.77	47.77	3.57	46.02	46.02	3.92	44.09	44.09	4.33	41.95	41.95	4.80	39.53	39.53	5.34	36.80	36.80	5.94

Manufacturer reserves the right to change, at any time, specifications and designs without notice and without obligations.

DETAILED COOLING CAPACITIES#

EVAPORATOR AIR		CONDENSER ENTERING AIR TEMPERATURES °F (°C)																	
		75 (23.9)			85 (29.4)			95 (35)			105 (40.6)			115 (46.1)			125 (51.7)		
CFM	EWB	Capacity MBtuh		Total System kW**	Capacity MBtuh		Total System kW**	Capacity MBtuh		Total System kW**	Capacity MBtuh		Total System kW**	Capacity MBtuh		Total System kW**	Capacity MBtuh		Total System kW**
		Total	Sens‡		Total	Sens‡		Total	Sens‡		Total	Sens‡		Total	Sens‡		Total	Sens‡	
26SCA560W003 Outdoor Section With CVAVA6024XM*Indoor Section																			
1700	72 (22.2)	68.79	34.10	4.23	66.04	33.01	4.68	63.06	31.83	5.19	59.83	30.57	5.77	56.30	29.23	6.43	52.51	27.78	7.17
	67 (19.4)	62.63	41.41	4.19	60.17	40.30	4.63	57.50	39.10	5.13	54.57	37.80	5.71	51.36	36.40	6.37	47.86	34.90	7.11
	63 (17.2)††	58.01	40.00	4.17	55.76	38.91	4.60	53.29	37.71	5.10	50.57	36.42	5.67	47.63	35.08	6.33	44.30	33.50	7.07
	62 (16.7)	56.95	48.47	4.16	54.73	47.36	4.59	52.30	46.15	5.09	49.61	44.84	5.66	46.66	43.37	6.32	43.49	41.99	7.06
	57 (13.9)	54.89	54.89	4.15	53.14	53.14	4.58	51.20	51.20	5.08	49.05	49.05	5.66	46.51	46.51	6.32	43.96	43.96	7.06
2000	72 (22.2)	70.44	35.59	4.39	67.53	34.45	4.84	64.38	33.25	5.35	60.97	31.95	5.93	57.28	30.56	6.59	53.27	29.06	7.33
	67 (19.4)	64.24	43.82	4.35	61.61	42.65	4.79	58.76	41.41	5.30	55.66	40.07	5.87	52.28	38.64	6.53	48.60	37.08	7.27
	63 (17.2)††	59.53	42.25	4.32	57.12	41.11	4.76	54.50	39.88	5.26	51.62	38.54	5.83	48.42	37.02	6.48	45.02	35.54	7.22
	62 (16.7)	58.43	51.84	4.32	56.06	50.69	4.75	53.47	49.43	5.25	50.63	48.10	5.82	48.53	48.53	6.49	45.69	45.69	7.23
	57 (13.9)	57.47	57.47	4.31	55.55	55.55	4.75	53.43	53.43	5.25	51.08	51.08	5.83	48.47	48.47	6.49	45.64	45.64	7.23
2250	72 (22.2)	71.53	36.73	4.52	68.49	35.57	4.97	65.21	34.33	5.49	61.68	33.00	6.07	57.86	31.57	6.73	53.72	30.04	7.47
	67 (19.4)	65.25	45.67	4.48	62.52	44.50	4.92	59.54	43.22	5.43	56.32	41.87	6.01	52.80	40.32	6.66	49.02	38.83	7.40
	63 (17.2)††	60.50	43.99	4.45	57.98	42.83	4.89	55.23	41.56	5.39	52.25	40.21	5.96	49.00	38.70	6.61	45.43	37.14	7.35
	62 (16.7)	59.38	54.52	4.45	56.90	53.35	4.88	54.22	52.09	5.38	52.46	52.46	5.97	49.73	49.73	6.63	46.80	46.80	7.37
	57 (13.9)	59.18	59.18	4.45	57.14	57.14	4.88	54.89	54.89	5.39	52.41	52.41	5.96	49.70	49.70	6.62	46.72	46.72	7.37

† Total and sensible capacities are net capacities. Blower motor heat has been subtracted.
‡ Sensible capacities shown are based on 80°F (27°C) entering air at the indoor coil. For sensible capacities at other than 80°F (27°C), deduct 835 Btuh (245 kW) per 1000 CFM (480 L/S) of indoor coil air for each degree below 80°F (27°C), or add 835 Btuh (245 kW) per 1000 CFM (480 L/S) of indoor coil air per degree above 80°F (27°C).
# Detailed cooling capacities are based on indoor and outdoor unit at the same elevation per AHRI standard 210/240-2024. If additional tubing length and/or indoor unit is located above outdoor unit, a slight variation in capacity may occur.
** System kw is total of indoor and outdoor unit kilowatts.
†† At TVA rating indoor condition (75°F edb/63°F ewb). All other indoor air temperatures are at 80°F edb.
NOTE: When the required data falls between the published data, interpolation may be performed. Extrapolation is not an acceptable practice.
EWB — Entering Wet Bulb

Manufacturer reserves the right to change, at any time, specifications and designs without notice and without obligations.

Condenser Only Ratings

SST °F (°C)		CONDENSER ENTERING AIR TEMPERATURES °F (°C)						
		55.0 (12.8)	65.0 (18.3)	75.0 (23.9)	85.0 (29.4)	95.0 (35.0)	105.0 (40.6)	115.0 (46.1)
26SCA518W003								
30.0 (-1.1)	TCG	15.24	14.16	13.22	12.36	11.54	10.71	9.86
	SDT	65.09	74.55	84.14	93.79	103.41	112.99	122.50
	KW	0.79	0.90	1.02	1.16	1.30	1.47	1.66
35.0 (1.7)	TCG	16.74	15.61	14.63	13.74	12.86	11.98	11.05
	SDT	65.74	75.28	84.85	94.40	104.06	113.60	123.07
	KW	0.77	0.89	1.02	1.15	1.30	1.47	1.66
40.0 (4.4)	TCG	18.29	17.17	16.15	15.21	14.28	13.34	12.35
	SDT	66.55	76.00	85.55	95.10	104.75	114.24	123.70
	KW	0.76	0.88	1.01	1.14	1.30	1.47	1.66
45.0 (7.2)	TCG	19.96	18.80	17.76	16.78	15.82	14.81	13.75
	SDT	67.31	76.78	86.33	95.86	105.34	114.95	124.22
	KW	0.74	0.87	1.00	1.13	1.29	1.46	1.65
50.0 (10.0)	TCG	21.71	20.54	19.48	18.46	17.45	16.37	15.25
	SDT	68.22	77.64	87.12	96.65	106.10	115.72	124.97
	KW	0.70	0.85	0.98	1.12	1.28	1.46	1.65
55.0 (12.8)	TCG	23.58	22.40	21.30	20.24	19.18	18.05	16.87
	SDT	69.00	78.42	87.98	97.51	106.98	116.50	125.72
	KW	0.71	0.83	0.97	1.11	1.27	1.45	1.65
26SCA524W003								
30.0 (-1.1)	TCG	20.00	18.97	17.99	16.99	15.99	14.91	13.80
	SDT	65.31	74.85	84.45	94.06	103.60	113.23	122.83
	KW	1.02	1.14	1.29	1.45	1.64	1.86	2.11
35.0 (1.7)	TCG	22.12	21.01	19.93	18.85	17.73	16.58	15.42
	SDT	66.11	75.65	85.18	94.74	104.34	113.87	123.24
	KW	1.01	1.14	1.28	1.45	1.64	1.85	2.10
40.0 (4.4)	TCG	24.39	23.20	22.02	20.84	19.63	18.38	17.10
	SDT	66.98	76.46	85.94	95.47	105.03	114.55	123.89
	KW	1.00	1.13	1.27	1.44	1.63	1.85	2.09
45.0 (7.2)	TCG	26.81	25.52	24.25	22.98	21.66	20.30	18.82
	SDT	67.95	77.35	86.78	96.20	105.73	115.26	124.22
	KW	0.99	1.12	1.27	1.43	1.62	1.84	2.08
50.0 (10.0)	TCG	29.40	28.01	26.62	25.24	23.82	22.35	20.77
	SDT	68.92	78.23	87.67	97.10	106.54	116.01	124.83
	KW	0.98	1.11	1.26	1.42	1.61	1.83	2.07
55.0 (12.8)	TCG	32.14	30.64	29.16	27.64	26.10	24.55	22.86
	SDT	70.02	79.31	88.59	98.02	107.44	116.76	125.64
	KW	0.97	1.10	1.24	1.41	1.79	1.83	2.06
26SCA530W003								
30.0 (-1.1)	TCG	25.30	23.61	22.14	20.81	19.59	18.39	17.17
	SDT	67.82	77.25	86.76	96.32	105.85	115.40	124.95
	KW	1.27	1.48	1.69	1.92	2.15	2.41	2.70
35.0 (1.7)	TCG	27.73	26.00	24.46	23.07	21.73	20.41	19.05
	SDT	68.77	78.15	87.63	97.12	106.67	116.19	125.65
	KW	1.28	1.48	1.69	1.91	2.15	2.42	2.71
40.0 (4.4)	TCG	30.33	28.57	26.97	25.49	24.03	22.59	21.10
	SDT	69.82	79.16	88.59	98.04	107.57	117.02	126.41
	KW	1.29	1.48	1.69	1.91	2.15	2.42	2.71
45.0 (7.2)	TCG	33.17	31.35	29.67	28.08	26.53	24.94	23.31
	SDT	70.82	80.18	89.63	99.06	108.50	117.91	127.15
	KW	1.30	1.49	1.69	1.91	2.15	2.41	2.71
50.0 (10.0)	TCG	36.19	34.31	32.57	30.89	29.21	27.47	25.65
	SDT	71.95	81.32	90.70	100.04	109.46	118.85	128.18
	KW	1.32	1.49	1.69	1.90	2.14	2.41	2.71
55.0 (12.8)	TCG	39.43	37.51	35.67	33.88	32.07	30.18	28.19
	SDT	73.16	82.46	91.79	101.17	110.51	119.84	129.06
	KW	1.33	1.50	1.69	1.89	2.13	2.39	2.69

Manufacturer reserves the right to change, at any time, specifications and designs without notice and without obligations.

Condenser Only Ratings (Continued)

SST °F (°C)		CONDENSER ENTERING AIR TEMPERATURES °F (°C)						
		55.0 (12.8)	65.0 (18.3)	75.0 (23.9)	85.0 (29.4)	95.0 (35.0)	105.0 (40.6)	115.0 (46.1)
26SCA536W003								
30.0 (-1.1)	TCG	28.25	27.31	26.09	24.70	23.17	21.55	19.91
	SDT	67.68	77.45	87.08	96.63	106.12	115.54	124.95
	KW	1.17	1.57	1.89	2.17	2.44	2.72	3.04
35.0 (1.7)	TCG	31.30	30.20	28.83	27.28	25.62	23.84	22.06
	SDT	68.84	78.54	88.12	97.62	107.06	116.43	125.78
	KW	1.19	1.57	1.89	2.18	2.45	2.74	3.07
40.0 (4.4)	TCG	34.58	33.31	31.78	30.05	28.22	26.31	24.35
	SDT	70.08	79.72	89.25	98.68	108.05	117.38	126.66
	KW	1.20	1.58	1.90	2.18	2.45	2.75	3.09
45.0 (7.2)	TCG	38.11	36.65	34.93	33.03	31.02	28.92	26.79
	SDT	71.43	81.00	90.45	99.82	109.14	118.37	127.62
	KW	1.22	1.59	1.89	2.18	2.46	2.76	3.11
50.0 (10.0)	TCG	41.90	40.22	38.30	36.20	33.98	31.71	29.38
	SDT	72.88	82.37	91.74	101.04	110.26	119.43	128.59
	KW	1.23	1.58	1.89	2.17	2.45	2.75	3.11
55.0 (12.8)	TCG	45.95	44.03	41.89	39.58	37.14	34.66	32.12
	SDT	74.47	83.83	93.12	102.33	111.47	120.58	129.63
	KW	1.23	1.57	1.87	2.15	2.43	2.74	3.11
26SCA542W003								
30.0 (-1.1)	TCG	34.51	32.93	31.32	29.69	27.98	26.16	24.24
	SDT	66.49	76.08	85.66	95.24	104.78	114.30	123.79
	KW	1.79	2.01	2.26	2.54	2.87	3.25	3.69
35.0 (1.7)	TCG	38.13	36.36	34.60	32.82	30.98	29.02	26.94
	SDT	67.53	77.03	86.56	96.09	105.62	115.09	124.53
	KW	1.79	2.01	2.26	2.54	2.87	3.25	3.69
40.0 (4.4)	TCG	41.99	40.07	38.16	36.21	34.21	32.09	29.83
	SDT	68.61	78.07	87.55	97.04	106.52	115.95	125.33
	KW	1.79	2.01	2.26	2.55	2.88	3.26	3.69
45.0 (7.2)	TCG	46.17	44.07	41.98	39.86	37.66	35.36	32.90
	SDT	69.80	79.19	88.62	98.06	107.47	116.86	126.18
	KW	1.79	2.01	2.26	2.55	2.88	3.26	3.70
50.0 (10.0)	TCG	50.68	48.38	46.09	43.78	41.35	38.84	36.17
	SDT	71.09	80.41	89.77	99.17	108.50	117.82	127.10
	KW	1.78	2.01	2.27	2.56	2.89	3.27	3.71
55.0 (12.8)	TCG	55.51	53.00	50.49	47.94	45.32	41.62	39.66
	SDT	72.47	81.73	91.02	100.26	109.61	118.54	128.07
	KW	1.78	2.01	2.27	2.57	2.90	3.27	3.72
26SCA548W003								
30.0 (-1.1)	TCG	40.62	38.68	36.79	34.81	32.70	30.37	27.82
	SDT	71.79	81.15	90.56	99.93	109.24	118.49	127.62
	KW	2.19	2.42	2.70	3.03	3.42	3.89	4.43
35.0 (1.7)	TCG	44.68	42.64	40.58	38.46	36.16	33.66	30.91
	SDT	73.27	82.61	91.93	101.25	110.50	119.68	128.76
	KW	2.20	2.43	2.72	3.05	3.45	3.91	4.45
40.0 (4.4)	TCG	49.05	46.87	44.64	42.34	39.86	37.13	34.16
	SDT	74.86	84.14	93.40	102.67	111.87	120.97	129.97
	KW	2.19	2.44	2.73	3.08	3.48	3.94	4.47
45.0 (7.2)	TCG	53.76	51.40	49.00	46.47	43.76	40.80	37.58
	SDT	76.58	85.79	95.03	104.18	113.29	122.31	131.23
	KW	2.19	2.45	2.75	3.10	3.51	3.97	4.50
50.0 (10.0)	TCG	58.82	56.27	53.62	50.86	47.89	44.68	41.17
	SDT	78.47	87.62	96.70	105.80	114.81	123.73	132.56
	KW	2.19	2.46	2.77	3.14	3.55	4.02	4.55
55.0 (12.8)	TCG	64.19	61.41	58.53	55.50	52.25	48.74	44.94
	SDT	80.42	89.48	98.52	107.52	116.44	125.26	133.98
	KW	2.18	2.47	2.80	3.17	3.59	4.07	4.60

Manufacturer reserves the right to change, at any time, specifications and designs without notice and without obligations.

Condenser Only Ratings (Continued)

SST °F (°C)		CONDENSER ENTERING AIR TEMPERATURES °F (°C)						
		55.0 (12.8)	65.0 (18.3)	75.0 (23.9)	85.0 (29.4)	95.0 (35.0)	105.0 (40.6)	115.0 (46.1)
26SCA560W003								
30.0 (-1.1)	TCG	48.39	46.46	44.41	42.14	39.61	36.87	33.84
	SDT	71.12	80.58	90.03	99.42	108.76	118.03	127.21
	KW	2.67	2.98	3.33	3.75	4.24	4.81	5.47
35.0 (1.7)	TCG	53.57	51.42	49.13	46.67	43.97	40.91	37.84
	SDT	72.66	82.04	91.40	100.74	110.03	119.24	128.38
	KW	2.67	2.99	3.35	3.78	4.27	4.83	5.49
40.0 (4.4)	TCG	59.08	56.66	54.16	51.46	48.53	45.25	42.05
	SDT	74.29	83.58	92.90	102.16	111.41	120.49	129.64
	KW	2.68	3.01	3.38	3.81	4.30	4.86	5.52
45.0 (7.2)	TCG	64.91	62.23	59.44	56.52	53.39	50.05	46.42
	SDT	76.02	85.23	94.44	103.64	112.79	121.87	130.94
	KW	2.69	3.03	3.41	3.84	4.34	4.92	5.57
50.0 (10.0)	TCG	71.04	68.07	65.01	61.78	58.44	54.85	51.01
	SDT	77.84	86.96	96.08	105.18	114.28	123.31	132.27
	KW	2.71	3.06	3.45	3.89	4.40	4.97	5.63
55.0 (12.8)	TCG	77.48	74.17	70.81	67.33	63.68	59.82	55.73
	SDT	79.79	88.86	97.81	106.85	115.85	124.79	133.68
	KW	2.75	3.10	3.50	3.95	4.46	5.04	5.70

KW- Outdoor Unit Kilowatts Only.
SDT-Saturated Temperature Leaving Compressor (°F)
SST-Saturated Temperature Entering Compressor (°F/°C)
TCG-Gross Cooling Capacity (1000 Btuh)

GUIDE SPECIFICATIONS

Air-cooled, split-system air conditioner 26SCA5 1.5 to 5 nominal tons

GENERAL

System Description

Outdoor-mounted, air-cooled, split-system air conditioner unit suitable for ground or rooftop installation. Unit consists of a hermetic compressor, an air-cooled coil, propeller-type condenser fan, and a control box. Unit will discharge supply air upward as shown on contract drawings. Unit will be used in a refrigeration circuit to match up to a packaged fan coil or coil unit.

Quality Assurance

- Unit will be rated in accordance with the latest edition of AHRI Standard 210/240.
- Unit will be certified for capacity and efficiency, and listed in AHRI directory.
- Unit construction will comply with latest edition of ANSI/ ASHRAE and with NEC.
- Unit will be constructed in accordance with UL standards and will carry the UL label of approval. Unit will have c-UL-us approval.
- Unit cabinet will be capable of withstanding Federal Test Method Standard No. 141 (Method 6061) 500-hr salt spray test.
- Air-cooled condenser coils will be leak tested at 150 psig and pressure tested at 470 psig.
- Unit constructed in ISO9001 approved facility.

Delivery, Storage, and Handling

- Unit will be shipped as single package only and is stored and handled per unit manufacturer's recommendations.

Warranty (for inclusion by specifying engineer)

- U.S. and Canada only.

PRODUCTS

Equipment

Factory assembled, single piece, air-cooled air conditioner unit. Contained within the unit enclosure is all factory wiring, piping, controls, compressor, refrigerant charge Puron Advance™ (R-454B), and special features required prior to field start-up.

Unit Cabinet

- Unit cabinet will be constructed of galvanized steel, bonderized, and coated with a powder coat paint.
  Available with dense grill only.

Fans

- Condenser fan will be direct-drive propeller type, discharging air upward.
- Condenser fan motors will be totally enclosed, 1-phase type with class B insulation and permanently lubricated bearings. Shafts will be corrosion resistant.
- Fan blades will be statically and dynamically balanced.
- Condenser fan openings will be equipped with coated steel wire safety guards.

Compressor

- Compressor will be hermetically sealed.
- Compressor will be mounted on rubber vibration isolators.

Condenser Coil

- Condenser coil will be air cooled.
- Coil will be constructed of aluminum fins mechanically bonded to copper or aluminum tubes which are then cleaned, dehydrated, and sealed.

Refrigeration Components

- Refrigeration circuit components will include liquid-line shutoff valve with sweat connections, vapor-line shutoff valve with sweat connections, system charge of Puron Advance™ (R-454B) refrigerant, and compressor oil.
- Unit will be shipped with filter drier for Puron Advance™ (R-454B) refrigerant.

Operating Characteristics

- The capacity of the unit will meet or exceed _____ Btuh at a suction temperature of _____ °F/°C. The power consumption at full load will not exceed _____ kW.
- Combination of the unit and the evaporator or fan coil unit will have a total net cooling capacity of _____ Btuh or greater at conditions of _____ CFM entering air temperature at the evaporator at _____ °F/°C wet bulb and _____ °F/°C dry bulb, and air entering the unit at _____ °F/°C.
- The system will have a SEER2 of _____ Btuh/watt or greater at DOE conditions.

Electrical Requirements

- Nominal unit electrical characteristics will be _____ v, single phase, 60 Hz. The unit will be capable of satisfactory operation within voltage limits of _____ v to _____ v.
- Nominal unit electrical characteristics will be _____ v, three phase, 60 Hz. The unit will be capable of satisfactory operation within voltage limits of _____ v to _____ v.
- Unit electrical power will be single point connection.
- Control circuit will be 24v.

Special Features

- Refer to section of this literature identifying accessories and descriptions for specific features and available enhancements.

Manufacturer reserves the right to change, at any time, specifications and designs without notice and without obligations.

© 2024 Carrier. All rights reserved.

Manufacturer reserves the right to change, at any time, specifications and designs without notice and without obligations.

26SPA6
Performance™ Series Single-Stage Air Conditioner with Puron Advance™ Refrigerant
1-1/2 To 5 Tons

Carrier®
Turn to the experts

Product Data

Puron ADVANCE™

InteliSense™ TECHNOLOGY

This unit has been designed utilizing Carrier's non-ozone depleting, low global warming potential Puron Advance™ refrigerant.
Air conditioners with Puron Advance™ refrigerant provide a collection of features unmatched by any other family of equipment.

NOTE: Ratings contained in this document are subject to change at any time. Always refer to the AHRI directory (www.ahridirectory.org) for the most up-to-date ratings information.

Industry leading Features / Benefits

Efficiency
- 13.8 - 17.0 SEER2 / 11.2 – 14.5 EER2
- MicroChannel Technology refrigeration system
- Indoor air quality accessories available

Comfort
- System supports programmable or standard thermostat controls

Reliability
- Non-ozone depleting, low global warming potential Puron Advance™ refrigerant
- Scroll compressor
- Internal pressure relief valve
- Internal thermal overload
- Filter drier

Durability
WeatherArmor™ Protection Package:
- Solid, durable sheet metal construction
- Louvered coil guard

Applications
- Long–line – up to 250 feet (76.20 m) total equivalent length, up to 200 feet (60.96 m) condenser above evaporator, or up to 80 ft. (24.4 m) evaporator above condenser (See Long Line Guide for more information.)
- Low ambient cooling (down to 0°F / -18°C) with approved low ambient accessory kits.

InteliSense™ Technology
- This unit is InteliSense capable when used with an ecobee for Carrier smart thermostat with InteliSense technology. InteliSense technology allows for the collection of performance data to be sent to the cloud. Utilizing Carrier's digital tools, dealers can gather system settings and equipment data, with homeowner opt-in, to provide quicker and more efficient service.

Limited Warranty
- 5-year parts limited warranty (including compressor and coil)
  10-year parts limited warranty (including compressor and coil) with timely registration*
  – Equipment must be registered within 90 days of original installation, except in jurisdictions where warranty benefits cannot be conditioned on registration.
  * Applies to original purchaser/homeowner and not available to subsequent owners except in jurisdictions where applicable laws dictate otherwise.

See warranty certificate for complete details and restrictions.

Model Number Nomenclature

1	2	3	4	5	6	7,8	9	10	11	12
N	N	A	A	A/N	N	N	A/N	A/N	A/N	N
2	**6**	**S**	**P**	**A**	**6**	**18**	**W**	**0**	**0**	**3**
Refrigerant and OD Type		OD Design Type	Tier	Major Series	SEER2	Nominal Cooling Capacity	Region	Feature	Special Feature	Voltage
26 = R-454B AC		S = Single Stage	P = Performance Series	A = Initial Series	6 =16.0 SEER2	**18** = 18,000 BTUH (1.5 Tons) **24** = 24,000 BTUH (2 Tons) **30** = 30,000 BTUH (2.5 Tons) **36** = 36,000 BTUH (3 Tons) **42** = 42,000 BTUH (3.5 Tons) **48** = 48,000 BTUH (4 Tons) **60** = 60,000 BTUH (5 Tons)	W=Standard SW AC	0=Standard	0=Standard	3=208-230-1 or 208/230-1

Use of the AHRI Certified TM Mark indicates a manufacturer's participation in the program For verification of certification for individual products, go to www.ahridirectory.org.

Quality ISO 9001

CATALOG ORDERING NUMBERS

Size	Model Number
18	26SPA618W003
24	26SPA624W003
30	26SPA630W003
36	26SPA636W003
42	26SPA642W003
48	26SPA648W003
60	26SPA660W003

STANDARD FEATURES

Features	18	24	30	36	42	48	60
Puron Advance™ Refrigerant	X	X	X	X	X	X	X
SEER2 (Range depending on indoor combination)	14.3 - 17.0	14.3 - 17.0	14.3 - 16.5	14.3 - 16.5	14.3 - 16.5	13.8 - 15.5	13.8 - 16.0
Scroll Compressor	X	X	X	X	X	X	X
Field Installed Filter Drier	X	X	X	X	X	X	X
Front Seating Service Valves	X	X	X	X	X	X	X
Internal Pressure Relief Valve	X	X	X	X	X	X	X
Internal Thermal Overload	X	X	X	X	X	X	X
Long Line Capability	X	X	X	X	X	X	X
Low Ambient Capability with Kit	X	X	X	X	X	X	X
High Pressure Switch	X	X	X	X	X	X	X
Low Pressure Switch	X	X	X	X	X	X	X
Compressor Sound Blanket	X	X	X	X	X	X	X
Louvered Coil Guard	X	X	X	X	X	X	X

PHYSICAL DATA

UNIT SIZE	18	24	30	36	42	48	60
COMPRESSOR TYPE	Scroll						
REFRIGERANT	Puron Advance™ (R-454B)						
Factory Charge* lb (kg)	4.2 (1.91)	4.7 (2.13)	5.5 (2.49)	6.9 (3.13)	7.2 (3.27)	5.7 (2.58)	7.9 (3.58)
COND FAN	Forward Swept or Propeller Type, Direct Drive						
Air Discharge	Vertical						
Air Qty (CFM)	2300	3600	3300	3800	4900	3100	3900
Motor HP	1/12	1/10	1/10	1/10	1/5	1/5	1/4
Motor RPM	800	825	825	825	1100	1100	1100
COND COIL							
Face Area (Sq ft)	17.7	19.8	22.0	17.7	22.0	17.7	22.0
Fins per In.	25	25	25	20	20	20	20
Rows	1	1	1	2	2	2	2
Circuits	4	4	6	8	9	8	9
VALVE CONNECT. (In. ID)							
Vapor	3/4	3/4	3/4	7/8	7/8	7/8	7/8
Liquid	3/8"						
REFRIGERANT TUBES† (In. OD)							
Rated Vapor†	5/8	3/4	3/4	7/8	7/8	7/8	1 1/8
Rated Liquid Line‡	3/8"						

*.For 15 ft. lineset
†.Units are rated with 25 ft (7.6 m) of lineset length. See Vapor Line Sizing and Cooling Capacity Loss table when using other sizes and lengths of lineset.
‡.See Liquid Line Sizing For Cooling Only Systems with Puron Advance™ Refrigerant tables.
Note: See unit Installation Instruction for proper installation.

Manufacturer reserves the right to change, at any time, specifications and designs without notice and without obligations.

REFRIGERANT PIPING LENGTH LIMITATIONS

Liquid Line Sizing and Maximum Total Equivalent Lengths for Cooling Only Systems with Puron Advance™ Refrigerant:

The maximum allowable length of a residential split system depends on the liquid line diameter and vertical separation between indoor and outdoor units.

See Table below for liquid line sizing and maximum lengths :

Table 1 – Maximum Total Equivalent Length
Outdoor Unit BELOW Indoor Unit

Size	Liquid Line Connection	Liquid Line Diam. (in.) w/ TXV	AC with Puron Advance™ Refrigerant Maximum Total Equivalent Length*: Outdoor unit BELOW Indoor Vertical Separation ft (m)								
			0-5 (0-1.5)	6-10 (1.8-3.0)	11-20 (3.4-6.1)	21-30 (6.4-9.1)	31-40 (9.4-12.2)	41-50 (12.5-15.2)	51-60 (15.5-18.3)	61-70 (18.6-21.3)	71-80 (21.6-24.4)
18000	3/8	1/4	150	150	125	100	100	75	--	--	--
		5/16	250	250	250	250	250	250	250	225	150
		3/8	250	250	250	250	250	250	250	250	250
24000	3/8	1/4	75	75	75	50	50	--	--	--	--
		5/16	250	250	250	250	250	225	175	125	100
		3/8	250	250	250	250	250	250	250	250	250
30000	3/8	1/4	30	--	--	--	--	--	--	--	--
		5/16	175	225	200	175	125	100	75	--	--
		3/8	250	250	250	250	250	250	250	250	250
36000	3/8	5/16	175	150	150	100	100	100	75	--	--
		3/8	250	250	250	250	250	250	250	250	250
42000	3/8	5/16	125	100	100	75	75	50	--	--	--
		3/8	250	250	250	250	250	250	250	250	150
48000	3/8	3/8	250	250	250	250	250	250	230	160	--
60000	3/8	3/8	250	250	250	225	190	150	110	--	--

*.Total equivalent length accounts for losses due to elbows or fitting. See the Long Line Guideline for details.
-- = Outside acceptable range

Table 2 – Maximum Total Equivalent Length
Outdoor Unit ABOVE Indoor Unit

Size	Liquid Line Connection	Liquid Line Diam. (in.) w/ TXV	AC with Puron Advance™ Refrigerant Maximum Total Equivalent Length*: Outdoor unit ABOVE Indoor Vertical Separation ft (m)							
			25 (7.6)	26-50 (7.9-15.2)	51-75 (15.5-22.9)	76-100 (23.2-30.5)	101-125 (30.8-38.1)	126-150 (38.4-45.7)	151-175 (46.0-53.3)	176-200 (53.6-61.0)
18000	3/8	1/4	175	250	250	250	250	250	250	250
		5/16	250	250	250	250	250	250	250	250
		3/8	250	250	250	250	250	250	250	250
24000	3/8	1/4	100	125	175	200	225	250	250	250
		5/16	250	250	250	250	250	250	250	250
		3/8	250	250	250	250	250	250	250	250
30000	3/8	1/4	30	--	--	--	--	--	--	--
		5/16	250	250	250	250	250	250	250	250
		3/8	250	250	250	250	250	250	250	250
36000	3/8	5/16	225	250	250	250	250	250	250	250
		3/8	250	250	250	250	250	250	250	250
42000	3/8	5/16	175	200	250	250	250	250	250	250
		3/8	250	250	250	250	250	250	250	250
48000	3/8	3/8	250	250	250	250	250	250	250	250
60000	3/8	3/8	250	250	250	250	250	250	250	250

*.Total equivalent length accounts for losses due to elbows or fitting. See the Long Line Guideline for details.
-- = Outside acceptable range

Table 3 – Refrigerant Charge Adjustments

Liquid Line Size (in.)	Puron Advance™ Charge oz/ft (g/m)
3/8	0.60 (17.74) (Factory charge for lineset = 9 oz / 266.16 g)
5/16	0.40 (11.83)
1/4	0.27 (7.98)

Units are factory charged for 15 ft (4.6 m) of 3/8" liquid line. The factory charge for 3/8" lineset 9 oz. (266.16 g). When using other length or diameter liquid lines, charge adjustments are required per the chart above.

Charging Formula:

[(Lineset oz/ft X total length) – (factory charge for lineset)] = charge adjustment

Example 1: System has 15 ft of lineset* using existing 1/4" liquid line. What charge adjustment is required?

Formula:(.27 oz/ft X 15ft) – (9 oz) = (-4.95) oz.

Net result is to remove 4.95 oz of refrigerant from the system

Example 2: System has 45 ft of existing 5/16" liquid line. What is the charge adjustment?

Formula:(.40 oz/ft. X 45ft) – (9 oz.) = 9 oz.

Net result is to add 9 oz of refrigerant to the system

NOTE: Conditions must be favorable for charging by subcooling method. Indoor temperature must be 70°F to 80°F (21°C to 27°C), and outdoor temperature must be 70°F to 100°F (21°C to 38°C). If outside these conditions, adjust charge for long linesets by weigh-in method.

* When applicable. Refer to Physical Data Table in this PD and to the Installation Instructions for more information.

Long Line Applications

An application is considered "Long Line" when the total equivalent tubing length exceeds 80 ft or when there is more than 35 ft. vertical separation between indoor and outdoor units. These applications require additional accessories and system modifications for reliable system operation. The maximum allowable total equivalent length is 250 ft. The maximum vertical separation is 200 ft. when outdoor unit is above indoor unit, and 80 ft. when the outdoor unit is below the indoor unit. Refer to Accessory Usage Guideline below for required accessories. See Long-Line Application Guideline for required piping and system modifications. Also, refer to table below for acceptable vapor tube diameters to minimize the cooling capacity loss.

VAPOR LINE SIZING AND COOLING CAPACITY LOSS

Acceptable vapor line diameters provide adequate oil return to the compressor while avoiding excessive capacity loss. The suction line diameters shown in the chart below are acceptable for AC systems with Puron Advance™ refrigerant:

Table 4 – Vapor Line Sizing and Cooling Capacity Losses — Puron Advance™ Refrigerant 1-Stage Air Conditioner Applications

Unit Nominal Size (Btuh)	Maximum Liquid Line Diameters (In. OD)	Acceptable Vapor Line Diameters (In. OD)	Cooling Capacity Loss (%) Total Equivalent Line Length ft. (m) 1-Stage AC with Puron Advance™								
			Total Equivalent Line Length (ft)								
			Standard Application		Long Line Application Requires Accessories						
			26-50 (7.9-15.2)	51-80 (15.5-24.4)	81-100 (24.7-30.5)	101-125 (30.8-38.1)	126-150 (38.4-45.7)	151-175 (46.0-53.3)	176-200 (53.6-61.0)	201-225 (61.3-68.6)	226-250 (68.9-76.2)
18	3/8	1/2	2	5	6	8	10	12	13	15	16
		5/8	1	2	3	4	4	5	6	7	7
		3/4	1	1	2	2	3	3	3	4	4
24	3/8	5/8	1	3	4	5	6	7	8	9	10
		3/4	1	1	2	3	3	4	4	5	5
		7/8	0	1	2	2	2	3	3	4	4
30	3/8	5/8	2	4	5	6	8	9	10	11	13
		3/4	1	2	2	3	4	4	5	6	6
		7/8	1	1	2	2	2	3	3	4	4
36	3/8	5/8	2	4	6	7	9	10	12	13	14
		3/4	1	2	3	3	4	5	6	6	7
		7/8	1	1	2	2	3	3	4	4	5
42	3/8	3/4	1	3	3	4	5	6	7	8	9
		7/8	1	2	2	3	3	4	4	5	6
		1 1/8	0	1	1	1	2	2	2	3	3
48	3/8	3/4	1	3	4	5	6	8	9	10	11
		7/8	1	2	2	3	4	4	5	6	6
		1 1/8	0	1	1	1	2	2	2	3	3
60	3/8	3/4	2	4	5	7	8	10	11	12	14
		7/8	1	2	3	4	5	6	6	7	8
		1 1/8	0	0	0	1	1	1	2	2	3
Applications in this area may be long line and may have height restrictions. See the Residential Piping and Long Line Guideline.											

ACCESSORIES

KIT NUMBER	KIT NAME	18	24	30	36	42	48	60
KSAFT0101AAA	FRZ THERM KIT	X	X	X	X	X	X	X
KAATD0101TDR	TIME DELAY KIT (90 second TDR)	X	X	X	X	X	X	X
KAATD0201TDR	TIME DELAY KIT (30 second TDR)	X	X	X	X	X	X	X
KSALA0301410	LOW AMBIENT COOLING KIT	X	X	X	X	X	X	X
KSALA1001AAA	MOTORMASTER KIT	X	X	X	X	X	X	X
KSAHS2501AAA	HARD START KIT	X	X	X	X	X	X	X
KSACY0201AAA	CYCLE PROTR KIT	X	X	X	X	X	X	X
KSASF0201AAA	SPRT FEET KIT	X	X	X	X	X	X	X
KAALS0201LLS*	SOL VALVE KIT	X	X	X	X	X	X	X
KAAWS0101AAA	WINTER ST KIT	X	X	X	X	X	X	X
KAACH1701AAA	CRKC HTR KIT	X	X	X	X			
KAACH1601AAA	CRKC HTR KIT					X	X	X

*.Do not use hard shutoff TXV with liquid solenoid valve

X = Accessory

ACCESSORY USAGE GUIDELINE

ACCESSORY	REQUIRED FOR LOW-AMBIENT COOLING APPLICATIONS (Below 55°F/12.8°C)	REQUIRED FOR LONG LINE APPLICATIONS*	REQUIRED FOR SEA COAST APPLICATIONS (Within 2 miles/3.22 km)
Ball Bearing Fan Motor	Standard	Standard	Standard
Compressor Start Assist Capacitor and Relay	Yes	Yes	No
Crankcase Heater	Yes	Yes	No
Evaporator Freeze Thermostat	Yes	No	No
Hard Shut-Off TXV	Yes	Yes	Yes
Liquid Line Solenoid Valve	No	No	No
MotorMaster® Control or Low-Ambient Pressure Switch	Yes	No	No
Support Feet	Recommended	No	Recommended
Winter Start Control	Yes†	No	No

*.For tubing set lengths between 80 and 200 ft. (24 and 61 m) horizontal or 35 ft. (10.7 m) vertical differential (total equivalent length), refer to the Residential Split-System Long Line Application Guideline.
†.Required if Low Pressure Switch is factory or field installed.

Accessory Description and Usage (Listed Alphabetically)

1. Ball-Bearing Fan Motor

A fan motor with ball bearings which permits speed reduction while maintaining bearing lubrication.

Usage Guideline:

Required on all units when MotorMaster® is used.

2. Compressor Start Assist - Capacitor and Relay

Start capacitor and relay gives a ”hard” boost to compressor motor at each start up.

Usage Guideline:

Required for single-phase scroll compressors in the following applications:

Long line

Low ambient cooling

Suggested for all compressors in areas with a history of low voltage problems.

3. Crankcase Heater

An electric resistance heater which mounts to the base of the compressor to keep the lubricant warm during off cycles. Improves compressor lubrication on restart and minimizes the chance of liquid slugging.

Usage Guideline:

Required in low ambient cooling applications.

Required in long line applications.

Suggested in all commercial applications.

4. Cycle Protector

The cycle protector is designed to prevent compressor short cycling. This control provides an approximate 5-minute delay after power to the compressor has been interrupted for any reason, including power outage, protector control trip, thermostat jiggling, or normal cycling.

5. Evaporator Freeze Thermostat

An SPST temperature-actuated switch that stops unit operation when evaporator reaches freeze-up conditions.

Usage Guideline:

Required when low ambient kit has been added.

6. Low-Ambient Pressure Switch Kit

A long life pressure switch which is mounted to outdoor unit service valve. It is designed to cycle the outdoor fan motor in order to maintain head pressure within normal operating limits (approximately 100 psig to 225 psig). The control will maintain working head pressure at low-ambient temperatures down to 0°F (-18°C) when properly installed and also using wind baffles. Instructions provided in accessory kit.

Usage Guideline:

A Low-Ambient Pressure Switch or MotorMaster® Low-Ambient Controller must be used when cooling operation is used at outdoor temperatures below 55°F (12.8°C).

7. MotorMaster® Low-Ambient Controller

A fan-speed control device activated by a temperature sensor, designed to control condenser fan motor speed in response to the saturated, condensing temperature during operation in cooling mode only. For outdoor temperatures down to –10°F/–23.3°C), it maintains condensing temperature at 100°F ±10°F (37.8°C ±5.5°C).

Usage Guideline:

A MotorMaster® Low Ambient Controller or Low-Ambient Pressure Switch must be used when cooling operation is used at outdoor temperatures below 55°F (12.8°C).

Suggested for all commercial applications.

8. Sound Hood

Wraparound sound reducing cover for the compressor. Reduces the sound level of the compressor.

Usage Guideline:

Suggested when unit is installed closer than 15 ft (4.57 m) to quiet areas, bedrooms, etc.

Suggested when unit is installed between two houses less than 10 ft (3 m) apart.

Manufacturer reserves the right to change, at any time, specifications and designs without notice and without obligations.

Accessory Description and Usage (Listed Alphabetically) Continued

9. Support Feet

Four or five stick-on plastic feet that raise the unit 4 in. (101.6 mm) above the mounting pad. This allows sand, dirt, and other debris to be flushed from the unit base, minimizing corrosion.

Usage Guideline:

Suggested in the following applications:

Coastal installations.

Windy areas or where debris is normally circulating.

Rooftop installations.

For improved sound ratings.

10. Time-Delay Relay

An SPST delay relay which briefly continues operation of indoor blower motor to provide additional cooling after the compressor cycles off.

NOTE: Most indoor unit controls include this feature. For those that do not, use the guideline below.

Usage Guideline:

For improved efficiency ratings for certain combinations of indoor and outdoor units. Refer to AHRI Directory of Certified Product Performance (AHRI Directory).

When a Time-Delay Relay (TDR) is called for in the AHRI Directory, use a 30 second TDR for MicroChannel Indoor units and use a 90 second TDR for Round Tube Plate Fin Indoor units.

11. Winter Start Control

This control is designed to alleviate nuisance opening of the low-pressure switch by bypassing it for the first 3 minutes of operation.

AHRI RATINGS

NOTE: Ratings contained in this document are subject to change at any time.

For AHRI ratings certificates, please refer to the AHRI directory www.ahridirectory.org

Additional ratings and system combinations can be accessed via the Ratings Database here: www.MyCarrierRatings.com

Electrical Data

UNIT SIZE	V/PH	OPER VOLTS*		COMPR		FAN	MCA	MAX FUSE† or CKT BRK AMPS
		MAX	MIN	LRA	RLA	FLA		
18	208/230/1	253	197	41.5	8.3	0.5	10.9	15.0
24				60.2	10.3	0.7	13.6	20.0
30				75.6	12.7	0.6	16.5	25.0
36				75.0	13.5	0.7	17.6	30.0
42				123.0	17.3	1.05	22.7	40.0
48				126.0	22.4	1.05	29.1	50.0
60				157.0	23.7	1.52	31.1	50.0

*.Permissible limits of the voltage range at which the unit will operate satisfactorily
†.Time-Delay fuse.

FLA- Full Load Amps
LRA - Locked Rotor Amps
MCA- Minimum Circuit Amps
RLA- Rated Load Amps
NOTE:Control circuit is 24V on all units and requires external power source. Copper wire must be used from service disconnect to unit.
All motors/compressors contain internal overload protection.

A–Weighted Sound Power (dBA)

UNIT SIZE	STANDARD RATING (dBA)	TYPICAL OCTAVE BAND SPECTRUM (dB, without tone adjustment)						
		125	250	500	1000	2000	4000	8000
18	70	55	58	63	66	62	60	55
24	67	50	59	61	61	60	55	48
30	69	53	58	63	64	62	56	51
36	69	52	57	63	67	60	54	50
42	73	55	64	67	69	65	62	57
48	74	56	66	69	70	66	62	57
60	74	58	64	68	69	65	61	59

NOTE: Tested in compliance with AHRI 270 but not listed with AHRI.

Charging Subcooling (TXV-Type Expansion Device)

UNIT SIZE	REQUIRED SUBCOOLING (F)	Indoor
18	5	TXV
24	5	
30	6	
36	8	
42	6	
48	8	
60	11	

DIMENSIONS

UNIT	SERIES	ELECTRICAL CHARACTERISTICS				A		B		C		D		E		F		G		H		I		J		K		OPERATING WEIGHT		SHIPPING WEIGHT		SHIPPING LENGTH / WIDTH (Sq.)		SHIPPING HEIGHT	
		208-230-1-60	208/230-3-60	460-3-60	575-3-60	INCH	MM	INCH	MM	INCH	MM	INCH	MM	INCH	MM	INCH	MM	INCH	MM	INCH	MM	INCH	MM	INCH	MM	INCH	MM	Lbs	Kgs	Lbs	Kgs	INCH	MM	INCH	MM
26SPA618W*0	0	Y	N	N	N	31 3/16	792.5	32 1/16	815.1	3/4	19.1	6 9/16	166.1	24 11/16	626.3	9 1/8	231.3	5/16	7.9	3	76.2	13	330.2	13 3/4	349.3	17 1/4	438.2	152	68.9	167	75.7	34 1/4	870.0	36 7/16	925.1
26SPA624W*0	0	Y	N	N	N	31 3/16	792.5	35 1/2	901.4	3/4	19.1	6 9/16	166.1	24 11/16	626.3	9 1/8	231.3	5/16	7.9	3	76.2	16	406.4	15 1/2	393.7	16 1/2	419.1	160	72.6	188	85.3	34 1/4	870.0	39 13/16	1011.2
26SPA630W*0	0	Y	N	N	N	31 3/16	792.5	38 7/8	987.8	3/4	19.1	6 9/16	166.1	24 11/16	626.3	9 1/8	231.3	5/16	7.9	3	76.2	14 1/2	368.3	15 3/4	400.1	17 1/4	438.2	167	75.7	195	88.5	34 1/4	870.0	43 1/4	1099.0
26SPA636W*0	0	Y	N	N	N	31 3/16	792.5	32 1/16	815.1	7/8	22.2	6 9/16	166.1	24 11/16	626.3	9 1/8	231.3	5/16	7.9	3	76.2	15 3/4	400.1	16 1/2	419.1	18 1/4	463.6	176	79.8	191	86.6	34 1/4	870.0	36 7/16	925.1
26SPA642W*0	0	Y	N	N	N	31 3/16	792.5	38 7/8	987.8	7/8	22.2	6 9/16	166.1	24 11/16	626.3	9 1/8	231.3	5/16	7.9	3	76.2	16 1/2	419.1	15 3/4	400.1	16 1/4	412.8	219	99.3	246	111.6	34 1/4	870.0	43 1/4	1099.0
26SPA648W*0	0	Y	N	N	N	31 3/16	792.5	32 1/16	815.1	7/8	22.2	6 9/16	166.1	24 11/16	626.3	9 1/8	231.3	5/16	7.9	3	76.2	14 1/2	368.3	15	381.0	13 1/2	342.9	202	91.6	217	98.4	34 1/4	870.0	36 7/16	925.1
26SPA660W*0	0	Y	N	N	N	31 3/16	792.5	38 7/8	987.8	7/8	22.2	6 9/16	166.1	24 11/16	626.3	9 1/8	231.3	5/16	7.9	3	76.2	15 1/2	393.7	14 1/2	368.3	16 1/2	419.1	221	100.2	249	112.9	34 1/4	870.0	43 1/4	1099.0

Y=YES
N=NO

NOTES:

1. CENTER OF GRAVITY .

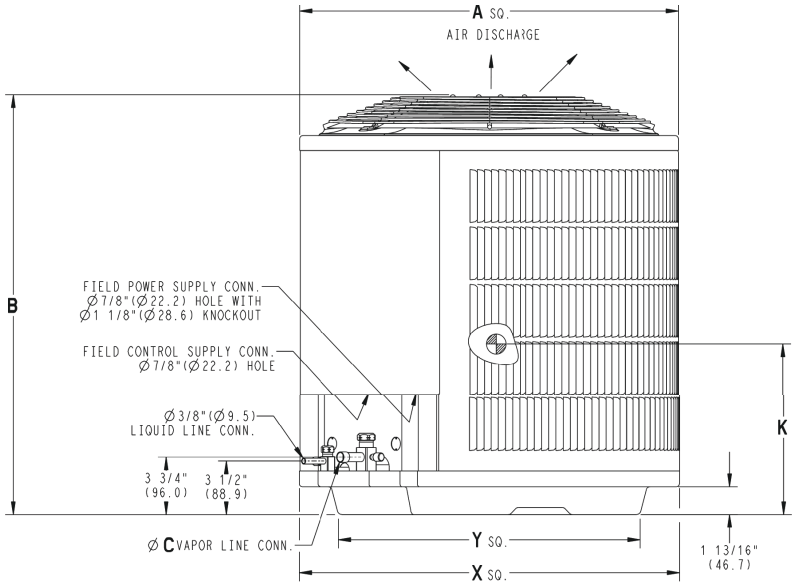

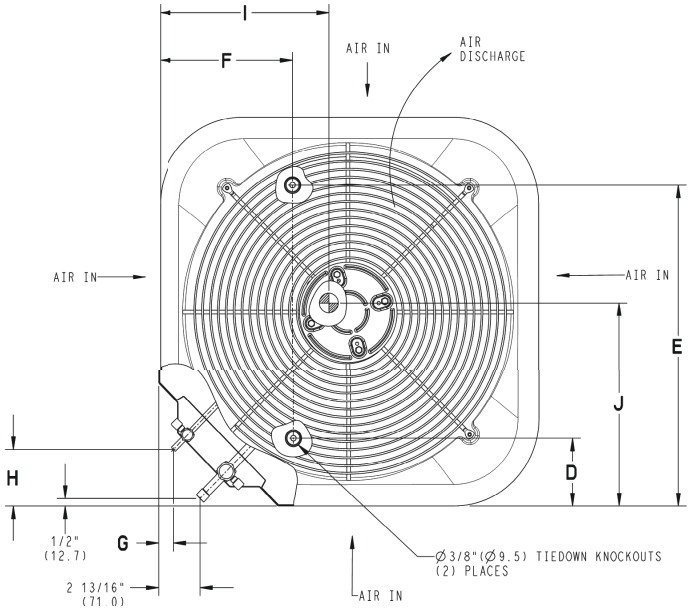

UNIT SIZE	"X" MINIMUM GROUND MOUNTING PAD APPLICATION DIMENSIONS		"Y" MINIMUM ROOF-TOP MOUNTING PAD APPLICATION DIMENSIONS	
-	23 1/8	587.3	17 7/8	454.6
-	25 3/4	654.0	20 7/16	518.5
18,24,30,36,42,48,60	31 3/16	792.5	22 15/16	583.2
-	35	889.0	26 3/4	679.7

NOTE: ALL DIMENSIONS IN INCH (MM)

U.S. ECCN: Not Subject to Regulation (N.S.R.)

SD5994-4 26SPA6 REV.-

Manufacturer reserves the right to change, at any time, specifications and designs without notice and without obligations.

CLEARANCES

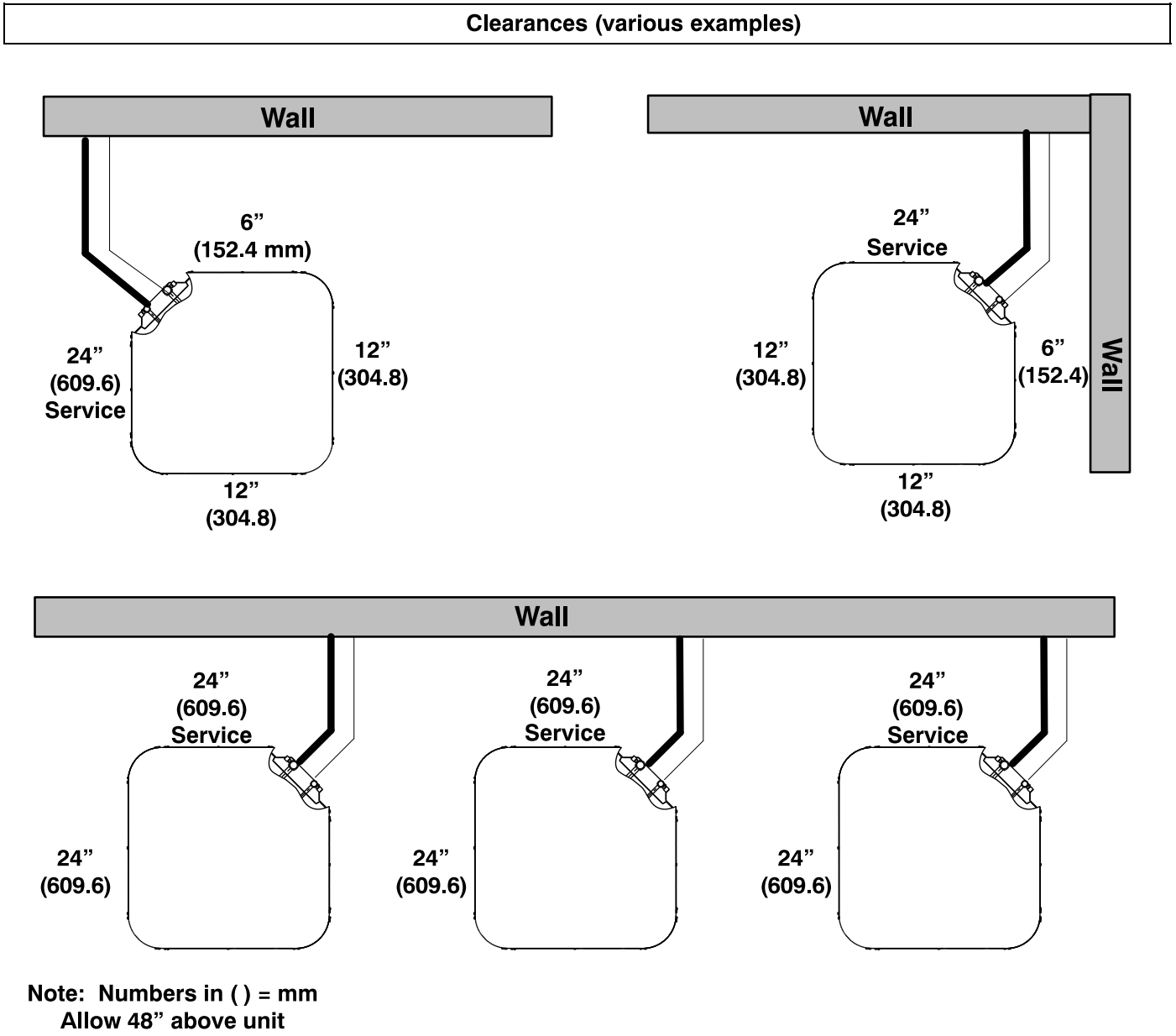

IMPORTANT: When installing multiple units in an alcove, roof well, or partially enclosed area, ensure there is adequate ventilation to prevent re-circulation of discharge air.

DETAILED COOLING CAPACITIES#

EVAPORATOR AIR		CONDENSER ENTERING AIR TEMPERATURES °F (°C)																	
		75 (23.9)			85 (29.4)			95 (35)			105 (40.6)			115 (46.1)			125 (51.7)		
CFM	EWB	Capacity MBtuh		Total System	Capacity MBtuh		Total System	Capacity MBtuh		Total System	Capacity MBtuh		Total System	Capacity MBtuh		Total System	Capacity MBtuh		Total System
		Total	Sens‡	kW**	Total	Sens‡	kW**	Total	Sens‡	kW**	Total	Sens‡	kW**	Total	Sens‡	kW**	Total	Sens‡	kW**
26SPA618W003 Outdoor Section With CVAVA1917XM* Indoor Section																			
525	72 (22.2)	21.12	10.13	1.20	20.29	9.81	1.34	19.46	9.50	1.49	18.57	9.15	1.66	17.55	8.78	1.86	16.44	8.36	2.08
	67 (19.4)	19.32	12.33	1.21	18.54	12.01	1.35	17.75	11.67	1.50	16.90	11.31	1.67	15.94	10.89	1.87	14.91	10.47	2.09
	63 (17.2)††	17.88	11.86	1.23	17.13	11.52	1.36	16.35	11.15	1.51	15.49	10.74	1.68	14.61	10.33	1.87	13.64	9.91	2.09
	62 (16.7)	17.63	14.48	1.23	16.88	14.13	1.36	16.13	13.79	1.51	15.32	13.42	1.68	14.45	13.02	1.88	13.52	12.47	2.10
	57 (13.9)	16.95	16.95	1.23	16.36	16.36	1.37	15.70	15.70	1.51	15.03	15.03	1.68	14.34	14.34	1.88	13.56	13.56	2.10
600	72 (22.2)	21.57	10.52	1.23	20.74	10.21	1.37	19.85	9.88	1.53	18.92	9.51	1.70	17.88	9.14	1.90	16.72	8.71	2.12
	67 (19.4)	19.76	13.00	1.25	18.96	12.66	1.38	18.13	12.32	1.54	17.25	11.95	1.71	16.29	11.53	1.90	15.17	11.06	2.13
	63 (17.2)††	18.30	12.48	1.26	17.51	12.12	1.40	16.70	11.73	1.55	15.86	11.36	1.72	14.91	10.93	1.91	13.90	10.49	2.13
	62 (16.7)	18.07	15.48	1.26	17.26	15.07	1.40	16.48	14.73	1.55	15.65	14.35	1.72	14.96	14.96	1.91	14.10	14.10	2.13
	57 (13.9)	17.71	17.71	1.26	17.02	17.02	1.40	16.39	16.39	1.55	15.67	15.67	1.72	14.94	14.94	1.91	14.05	14.05	2.13
675	72 (22.2)	21.93	10.87	1.26	21.06	10.55	1.40	20.17	10.22	1.56	19.17	9.83	1.73	18.13	9.47	1.93	16.94	9.02	2.16
	67 (19.4)	20.10	13.61	1.28	19.27	13.27	1.42	18.40	12.90	1.57	17.48	12.53	1.75	16.47	12.10	1.94	15.36	11.65	2.16
	63 (17.2)††	18.62	13.05	1.29	17.79	12.65	1.43	16.97	12.30	1.58	16.10	11.92	1.75	15.09	11.39	1.95	14.08	11.01	2.17
	62 (16.7)	18.35	16.32	1.30	17.59	16.04	1.43	16.73	16.73	1.58	16.23	16.23	1.75	15.46	15.46	1.95	14.56	14.56	2.17
	57 (13.9)	18.33	18.33	1.30	17.63	17.63	1.43	16.97	16.97	1.58	16.17	16.17	1.75	15.38	15.38	1.95	14.45	14.45	2.17
26SPA624W003 Outdoor Section With CVAVA2414XM* Indoor Section																			
700	72 (22.2)	26.92	13.27	1.56	25.83	12.82	1.73	24.73	12.38	1.92	23.54	11.90	2.13	22.31	11.35	2.38	20.90	10.80	2.66
	67 (19.4)	24.52	15.94	1.58	23.56	15.50	1.74	22.55	15.05	1.93	21.39	14.51	2.14	20.28	13.97	2.39	19.03	13.40	2.67
	63 (17.2)††	22.61	15.33	1.59	21.71	14.90	1.75	20.76	14.41	1.94	19.75	13.91	2.15	18.66	13.38	2.40	17.50	12.81	2.68
	62 (16.7)	22.29	18.55	1.59	21.41	18.10	1.75	20.48	17.63	1.94	19.48	17.12	2.15	18.41	16.58	2.40	17.27	16.02	2.68
	57 (13.9)	21.35	21.35	1.59	20.64	20.64	1.75	19.86	19.86	1.94	19.08	19.08	2.15	18.19	18.19	2.40	17.27	17.27	2.68
750	72 (22.2)	27.25	13.50	1.59	26.14	13.05	1.75	25.01	12.59	1.94	23.79	12.11	2.15	22.50	11.55	2.40	21.11	11.03	2.68
	67 (19.4)	24.83	16.31	1.60	23.84	15.88	1.76	22.80	15.40	1.95	21.68	14.88	2.16	20.50	14.37	2.41	19.19	13.75	2.69
	63 (17.2)††	22.90	15.69	1.61	21.98	15.24	1.77	20.98	14.73	1.96	19.96	14.24	2.17	18.81	13.69	2.42	17.65	13.13	2.70
	62 (16.7)	22.58	19.07	1.61	21.67	18.62	1.77	20.71	18.15	1.96	19.69	17.63	2.17	18.60	17.08	2.42	17.66	16.60	2.70
	57 (13.9)	21.80	21.80	1.61	21.06	21.06	1.77	20.26	20.26	1.96	19.45	19.45	2.17	18.52	18.52	2.42	17.58	17.58	2.70
900	72 (22.2)	28.02	14.10	1.65	26.84	13.63	1.82	25.64	13.16	2.01	24.34	12.65	2.22	22.98	12.10	2.47	21.48	11.46	2.75
	67 (19.4)	25.57	17.36	1.67	24.49	16.88	1.83	23.37	16.36	2.02	22.18	15.83	2.23	20.94	15.29	2.48	19.57	14.63	2.76
	63 (17.2)††	23.59	16.65	1.68	22.56	16.12	1.84	21.54	15.65	2.03	20.42	15.06	2.24	19.26	14.56	2.49	17.96	13.84	2.77
	62 (16.7)	23.24	20.55	1.68	22.26	20.06	1.84	21.27	19.63	2.03	20.17	19.06	2.24	19.03	19.03	2.49	18.29	18.29	2.77
	57 (13.9)	22.88	22.88	1.68	22.10	22.10	1.84	21.26	21.26	2.03	20.34	20.34	2.24	19.38	19.38	2.48	18.22	18.22	2.77

Manufacturer reserves the right to change, at any time, specifications and designs without notice and without obligations.

DETAILED COOLING CAPACITIES#

EVAPORATOR AIR		CONDENSER ENTERING AIR TEMPERATURES °F (°C)																	
		75 (23.9)			85 (29.4)			95 (35)			105 (40.6)			115 (46.1)			125 (51.7)		
CFM	EWB	Capacity MBtuh		Total System	Capacity MBtuh		Total System	Capacity MBtuh		Total System	Capacity MBtuh		Total System	Capacity MBtuh		Total System	Capacity MBtuh		Total System
		Total	Sens‡	kW**	Total	Sens‡	kW**	Total	Sens‡	kW**	Total	Sens‡	kW**	Total	Sens‡	kW**	Total	Sens‡	kW**
26SPA630W003 Outdoor Section With CVAVA3117XM* Indoor Section																			
850	72 (22.2)	35.15	17.35	2.07	33.76	16.82	2.27	32.32	16.27	2.50	30.75	15.68	2.76	28.97	15.02	3.06	27.08	14.31	3.39
	67 (19.4)	32.06	21.15	2.07	30.75	20.58	2.28	29.40	20.00	2.51	27.98	19.39	2.77	26.44	18.76	3.07	24.74	18.07	3.40
	63 (17.2)††	29.69	20.39	2.07	28.43	19.80	2.29	27.17	19.21	2.52	25.86	18.62	2.78	24.41	17.98	3.08	22.88	17.29	3.41
	62 (16.7)	29.18	24.83	2.08	27.95	24.25	2.29	26.71	23.67	2.52	25.41	23.07	2.79	24.05	22.48	3.09	22.52	22.52	3.42
	57 (13.9)	28.10	28.10	2.08	27.13	27.13	2.29	26.15	26.15	2.53	25.12	25.12	2.79	23.95	23.95	3.08	22.72	22.72	3.41
1000	72 (22.2)	36.06	18.22	2.14	34.61	17.68	2.34	33.08	17.11	2.57	31.43	16.50	2.83	29.55	15.80	3.13	27.65	15.13	3.46
	67 (19.4)	32.92	22.54	2.15	31.55	21.96	2.35	30.12	21.37	2.58	28.60	20.74	2.84	26.97	20.09	3.14	25.17	19.36	3.48
	63 (17.2)††	30.50	21.68	2.15	29.18	21.08	2.36	27.85	20.49	2.59	26.45	19.86	2.86	24.94	19.18	3.15	23.27	18.46	3.49
	62 (16.7)	29.98	26.80	2.15	28.68	26.21	2.36	27.38	25.66	2.60	26.07	26.07	2.86	25.12	25.12	3.15	23.71	23.71	3.49
	57 (13.9)	29.61	29.61	2.15	28.56	28.56	2.36	27.48	27.48	2.59	26.32	26.32	2.86	25.06	25.06	3.15	23.72	23.72	3.48
1125	72 (22.2)	36.63	18.87	2.20	35.12	18.31	2.40	33.53	17.73	2.63	31.83	17.11	2.89	29.88	16.38	3.18	27.93	15.70	3.52
	67 (19.4)	33.44	23.61	2.21	32.03	23.02	2.41	30.55	22.42	2.64	28.98	21.80	2.90	26.85	20.79	3.20	25.42	20.38	3.54
	63 (17.2)††	31.01	22.67	2.21	29.64	22.07	2.42	28.25	21.46	2.65	26.80	20.83	2.92	25.23	20.16	3.21	23.52	19.42	3.55
	62 (16.7)	30.48	28.37	2.21	29.24	27.99	2.42	28.35	28.35	2.65	27.15	27.15	2.91	25.84	25.84	3.21	24.39	24.39	3.54
	57 (13.9)	30.60	30.60	2.21	29.49	29.49	2.42	28.31	28.31	2.65	27.12	27.12	2.91	25.79	25.79	3.21	24.32	24.32	3.55
26SPA636W003 Outdoor Section With CVAVA3721XM*Indoor Section																			
1000	72 (22.2)	40.83	19.76	2.33	39.03	19.08	2.60	37.05	18.33	2.87	34.94	17.55	3.17	32.76	16.65	3.52	30.44	15.91	3.96
	67 (19.4)	37.20	24.05	2.34	35.58	23.35	2.62	33.80	22.60	2.89	31.90	21.81	3.19	29.90	20.99	3.54	27.87	20.14	3.97
	63 (17.2)††	34.44	23.19	2.35	32.96	22.51	2.63	31.33	21.76	2.90	29.58	20.98	3.20	27.74	20.17	3.54	25.84	19.33	3.97
	62 (16.7)	33.81	28.18	2.35	32.35	27.49	2.63	30.75	26.74	2.90	29.04	25.95	3.20	27.28	25.23	3.54	26.28	24.33	3.97
	57 (13.9)	32.70	32.70	2.35	31.54	31.54	2.63	30.24	30.24	2.90	28.86	28.86	3.20	27.38	27.38	3.54	25.82	25.82	3.97
1200	72 (22.2)	42.01	20.80	2.42	40.05	20.08	2.68	37.93	19.30	2.96	35.67	18.48	3.26	33.34	17.65	3.61	30.91	16.78	4.05
	67 (19.4)	38.27	25.72	2.44	36.52	25.00	2.71	34.61	24.23	2.98	32.58	23.41	3.28	30.45	22.54	3.64	28.32	21.67	4.07
	63 (17.2)††	35.45	24.75	2.45	33.85	24.04	2.72	32.10	23.27	2.99	30.23	22.46	3.29	28.29	21.49	3.64	26.24	20.71	4.07
	62 (16.7)	34.79	30.53	2.45	33.24	29.84	2.72	31.52	29.08	3.00	29.82	29.82	3.29	28.65	28.65	3.64	26.91	26.91	4.07
	57 (13.9)	34.43	34.43	2.45	33.16	33.16	2.72	31.75	31.75	3.00	30.22	30.22	3.29	28.61	28.61	3.64	26.87	26.87	4.07
1350	72 (22.2)	42.64	21.48	2.48	40.60	20.74	2.75	38.38	19.94	3.02	36.05	19.11	3.33	33.63	18.25	3.68	31.13	17.37	4.12
	67 (19.4)	38.85	26.87	2.51	37.02	26.13	2.78	35.03	25.34	3.05	32.92	24.49	3.35	30.72	23.38	3.71	28.40	22.58	4.14
	63 (17.2)††	36.00	25.81	2.52	34.33	25.09	2.79	32.50	24.30	3.07	30.55	23.46	3.37	28.53	22.60	3.72	26.35	21.56	4.14
	62 (16.7)	35.34	32.21	2.52	33.75	31.59	2.80	32.68	32.68	3.07	31.05	31.05	3.36	29.30	29.30	3.71	27.50	27.50	4.14
	57 (13.9)	35.50	35.50	2.52	34.14	34.14	2.79	32.64	32.64	3.07	31.02	31.02	3.36	29.28	29.28	3.71	27.47	27.47	4.14

Manufacturer reserves the right to change, at any time, specifications and designs without notice and without obligations.

DETAILED COOLING CAPACITIES#

EVAPORATOR AIR		CONDENSER ENTERING AIR TEMPERATURES °F (°C)																	
		75 (23.9)			85 (29.4)			95 (35)			105 (40.6)			115 (46.1)			125 (51.7)		
CFM	EWB	Capacity MBtuh		Total System	Capacity MBtuh		Total System	Capacity MBtuh		Total System	Capacity MBtuh		Total System	Capacity MBtuh		Total System	Capacity MBtuh		Total System
		Total	Sens‡	kW**	Total	Sens‡	kW**	Total	Sens‡	kW**	Total	Sens‡	kW**	Total	Sens‡	kW**	Total	Sens‡	kW**
26SPA642W003 Outdoor Section With CVAVA4217XM*Indoor Section																			
1200	72 (22.2)	47.99	24.43	2.81	46.07	23.65	3.10	43.99	22.81	3.43	41.69	21.91	3.80	39.21	20.91	4.23	36.53	19.87	4.71
	67 (19.4)	43.60	29.56	2.80	41.87	28.75	3.09	40.00	27.90	3.42	37.98	26.96	3.79	35.75	25.96	4.22	33.31	24.91	4.71
	63 (17.2)††	40.30	28.51	2.80	38.70	27.71	3.09	36.99	26.86	3.41	35.13	25.95	3.79	33.09	24.98	4.22	30.85	23.91	4.71
	62 (16.7)	39.55	34.47	2.80	37.98	33.67	3.09	36.29	32.82	3.41	34.47	31.91	3.79	32.47	30.95	4.22	30.37	29.97	4.70
	57 (13.9)	38.07	38.07	2.80	36.80	36.80	3.08	35.46	35.46	3.41	34.01	34.01	3.79	32.39	32.39	4.22	30.57	30.57	4.71
1400	72 (22.2)	49.23	25.48	2.90	47.17	24.65	3.19	44.96	23.78	3.53	42.56	22.83	3.90	39.95	21.82	4.33	37.10	20.73	4.81
	67 (19.4)	44.73	31.19	2.90	42.88	30.36	3.19	40.89	29.48	3.52	38.73	28.52	3.89	36.38	27.50	4.32	33.82	26.38	4.81
	63 (17.2)††	41.35	30.02	2.90	39.65	29.20	3.18	37.82	28.32	3.51	35.84	27.37	3.89	33.69	26.32	4.32	31.32	25.28	4.80
	62 (16.7)	40.56	36.75	2.90	38.89	35.92	3.18	37.10	35.04	3.51	35.19	34.18	3.89	33.15	33.32	4.31	31.71	31.71	4.80
	57 (13.9)	39.76	39.76	2.90	38.42	38.42	3.18	36.98	36.98	3.51	35.39	35.39	3.89	33.64	33.64	4.32	31.66	31.66	4.80
1575	72 (22.2)	50.07	26.30	2.99	47.91	25.44	3.28	45.60	24.54	3.61	43.07	23.57	3.99	40.34	22.50	4.42	37.44	21.41	4.90
	67 (19.4)	45.49	32.54	2.99	43.55	31.69	3.27	41.47	30.78	3.60	39.23	29.79	3.98	36.78	28.73	4.41	34.06	27.53	4.89
	63 (17.2)††	42.07	31.28	2.98	40.28	30.43	3.27	38.37	29.54	3.60	36.30	28.56	3.97	34.07	27.54	4.40	31.54	26.32	4.89
	62 (16.7)	41.25	38.65	2.98	39.51	37.80	3.27	37.66	36.96	3.60	35.61	35.61	3.97	34.52	34.52	4.40	32.45	32.45	4.89
	57 (13.9)	41.01	41.01	2.98	39.59	39.59	3.27	38.05	38.05	3.60	36.36	36.36	3.97	34.48	34.48	4.40	32.25	32.25	4.88
26SPA648W003 Outdoor Section With CVAVA4821XM*Indoor Section																			
1400	72 (22.2)	55.90	27.60	3.41	53.55	26.66	3.77	50.94	25.64	4.19	48.06	24.54	4.66	44.88	23.30	5.19	41.20	21.94	5.79
	67 (19.4)	50.93	33.48	3.39	48.83	32.54	3.74	46.50	31.50	4.15	43.91	30.36	4.62	41.01	29.09	5.15	37.70	27.69	5.75
	63 (17.2)††	47.24	32.38	3.38	45.30	31.44	3.72	43.15	30.41	4.13	40.77	29.29	4.59	38.08	28.02	5.12	35.09	26.69	5.73
	62 (16.7)	46.39	39.20	3.37	44.47	38.23	3.72	42.38	37.22	4.12	40.03	36.08	4.59	37.41	34.84	5.12	34.91	34.91	5.72
	57 (13.9)	44.68	44.68	3.37	43.18	43.18	3.71	41.49	41.49	4.12	39.58	39.58	4.58	37.41	37.41	5.12	34.99	34.99	5.73
1600	72 (22.2)	57.04	28.56	3.51	54.55	27.60	3.87	51.82	26.56	4.29	48.80	25.41	4.76	45.46	24.16	5.30	41.81	22.80	5.90
	67 (19.4)	52.02	35.05	3.49	49.79	34.07	3.85	47.34	33.00	4.26	44.61	31.82	4.72	41.57	30.54	5.26	38.23	29.13	5.86
	63 (17.2)††	48.25	33.84	3.48	46.20	32.87	3.82	43.94	31.80	4.23	41.44	30.64	4.70	38.64	29.35	5.23	35.53	27.96	5.83
	62 (16.7)	47.37	41.39	3.47	45.36	40.42	3.82	43.15	39.37	4.22	40.70	38.22	4.69	38.62	38.62	5.23	36.04	36.04	5.84
	57 (13.9)	46.37	46.37	3.47	44.75	44.75	3.82	42.91	42.91	4.22	40.88	40.88	4.69	38.59	38.59	5.23	35.99	35.99	5.83
1800	72 (22.2)	57.93	29.47	3.61	55.36	28.49	3.97	52.50	27.41	4.39	49.37	26.23	4.87	45.91	24.95	5.40	42.13	23.54	6.00
	67 (19.4)	52.86	36.53	3.59	50.54	35.52	3.95	47.97	34.43	4.36	45.13	33.23	4.83	41.98	31.91	5.36	38.53	30.48	5.96
	63 (17.2)††	49.05	35.21	3.57	46.91	34.21	3.92	44.55	33.12	4.33	41.94	31.93	4.80	39.09	30.65	5.33	35.83	29.22	5.93
	62 (16.7)	48.14	43.50	3.57	46.05	42.51	3.92	43.75	41.46	4.33	42.07	42.07	4.80	39.56	39.56	5.34	36.83	36.83	5.94
	57 (13.9)	47.77	47.77	3.57	46.02	46.02	3.92	44.09	44.09	4.33	41.95	41.95	4.80	39.53	39.53	5.34	36.80	36.80	5.94

Manufacturer reserves the right to change, at any time, specifications and designs without notice and without obligations.

DETAILED COOLING CAPACITIES#

EVAPORATOR AIR		CONDENSER ENTERING AIR TEMPERATURES °F (°C)																	
		75 (23.9)			85 (29.4)			95 (35)			105 (40.6)			115 (46.1)			125 (51.7)		
CFM	EWB	Capacity MBtuh		Total System	Capacity MBtuh		Total System	Capacity MBtuh		Total System	Capacity MBtuh		Total System	Capacity MBtuh		Total System	Capacity MBtuh		Total System
		Total	Sens‡	kW**	Total	Sens‡	kW**	Total	Sens‡	kW**	Total	Sens‡	kW**	Total	Sens‡	kW**	Total	Sens‡	kW**
26SPA660W003 Outdoor Section With CVAVA6024XM*Indoor Section																			
1700	72 (22.2)	68.79	34.10	4.23	66.04	33.01	4.68	63.06	31.83	5.19	59.83	30.57	5.77	56.30	29.23	6.43	52.51	27.78	7.17
	67 (19.4)	62.63	41.41	4.19	60.17	40.30	4.63	57.50	39.10	5.13	54.57	37.80	5.71	51.36	36.40	6.37	47.86	34.90	7.11
	63 (17.2)††	58.01	40.00	4.17	55.76	38.91	4.60	53.29	37.71	5.10	50.57	36.42	5.67	47.63	35.08	6.33	44.30	33.50	7.07
	62 (16.7)	56.95	48.47	4.16	54.73	47.36	4.59	52.30	46.15	5.09	49.61	44.84	5.66	46.66	43.37	6.32	43.49	41.99	7.06
	57 (13.9)	54.89	54.89	4.15	53.14	53.14	4.58	51.20	51.20	5.08	49.05	49.05	5.66	46.51	46.51	6.32	43.96	43.96	7.06
2000	72 (22.2)	70.44	35.59	4.39	67.53	34.45	4.84	64.38	33.25	5.35	60.97	31.95	5.93	57.28	30.56	6.59	53.27	29.06	7.33
	67 (19.4)	64.24	43.82	4.35	61.61	42.65	4.79	58.76	41.41	5.30	55.66	40.07	5.87	52.28	38.64	6.53	48.60	37.08	7.27
	63 (17.2)††	59.53	42.25	4.32	57.12	41.11	4.76	54.50	39.88	5.26	51.62	38.54	5.83	48.42	37.02	6.48	45.02	35.54	7.22
	62 (16.7)	58.43	51.84	4.32	56.06	50.69	4.75	53.47	49.43	5.25	50.63	48.10	5.82	48.53	48.53	6.49	45.69	45.69	7.23
	57 (13.9)	57.47	57.47	4.31	55.55	55.55	4.75	53.43	53.43	5.25	51.08	51.08	5.83	48.47	48.47	6.49	45.64	45.64	7.23
2250	72 (22.2)	71.53	36.73	4.52	68.49	35.57	4.97	65.21	34.33	5.49	61.68	33.00	6.07	57.86	31.57	6.73	53.72	30.04	7.47
	67 (19.4)	65.25	45.67	4.48	62.52	44.50	4.92	59.54	43.22	5.43	56.32	41.87	6.01	52.80	40.32	6.66	49.02	38.83	7.40
	63 (17.2)††	60.50	43.99	4.45	57.98	42.83	4.89	55.23	41.56	5.39	52.25	40.21	5.96	49.00	38.70	6.61	45.43	37.14	7.35
	62 (16.7)	59.38	54.52	4.45	56.90	53.35	4.88	54.22	52.09	5.38	52.46	52.46	5.97	49.73	49.73	6.63	46.80	46.80	7.37
	57 (13.9)	59.18	59.18	4.45	57.14	57.14	4.88	54.89	54.89	5.39	52.41	52.41	5.96	49.70	49.70	6.62	46.72	46.72	7.37

† Total and sensible capacities are net capacities. Blower motor heat has been subtracted.
‡ Sensible capacities shown are based on 80°F (27°C) entering air at the indoor coil. For sensible capacities at other than 80°F (27°C), deduct 835 Btuh (245 kW) per 1000 CFM (480 L/S) of indoor coil air for each degree below 80°F (27°C), or add 835 Btuh (245 kW) per 1000 CFM (480 L/S) of indoor coil air per degree above 80°F (27°C).
# Detailed cooling capacities are based on indoor and outdoor unit at the same elevation per AHRI standard 210/240-2024. If additional tubing length and/or indoor unit is located above outdoor unit, a slight variation in capacity may occur.
** System kw is total of indoor and outdoor unit kilowatts.
†† At TVA rating indoor condition (75°F edb/63°F ewb). All other indoor air temperatures are at 80°F edb.
NOTE: When the required data falls between the published data, interpolation may be performed. Extrapolation is not an acceptable practice.
EWB — Entering Wet Bulb

Manufacturer reserves the right to change, at any time, specifications and designs without notice and without obligations.

Condenser Only Ratings

SST °F (°C)		CONDENSER ENTERING AIR TEMPERATURES °F (°C)						
		55.0 (12.8)	65.0 (18.3)	75.0 (23.9)	85.0 (29.4)	95.0 (35.0)	105.0 (40.6)	115.0 (46.1)
26SPA618W003								
30.0 (-1.1)	TCG	15.24	14.16	13.22	12.36	11.54	10.71	9.86
	SDT	65.09	74.55	84.14	93.79	103.41	112.99	122.50
	KW	0.79	0.90	1.02	1.16	1.30	1.47	1.66
35.0 (1.7)	TCG	16.74	15.61	14.63	13.74	12.86	11.98	11.05
	SDT	65.74	75.28	84.85	94.40	104.06	113.60	123.07
	KW	0.77	0.89	1.02	1.15	1.30	1.47	1.66
40.0 (4.4)	TCG	18.29	17.17	16.15	15.21	14.28	13.34	12.35
	SDT	66.55	76.00	85.55	95.10	104.75	114.24	123.70
	KW	0.76	0.88	1.01	1.14	1.30	1.47	1.66
45.0 (7.2)	TCG	19.96	18.80	17.76	16.78	15.82	14.81	13.75
	SDT	67.31	76.78	86.33	95.86	105.34	114.95	124.22
	KW	0.74	0.87	1.00	1.13	1.29	1.46	1.65
50.0 (10.0)	TCG	21.71	20.54	19.48	18.46	17.45	16.37	15.25
	SDT	68.22	77.64	87.12	96.65	106.10	115.72	124.97
	KW	0.70	0.85	0.98	1.12	1.28	1.46	1.65
55.0 (12.8)	TCG	23.58	22.40	21.30	20.24	19.18	18.05	16.87
	SDT	69.00	78.42	87.98	97.51	106.98	116.50	125.72
	KW	0.71	0.83	0.97	1.11	1.27	1.45	1.65
26SPA624W003								
30.0 (-1.1)	TCG	20.00	18.97	17.99	16.99	15.99	14.91	13.80
	SDT	65.31	74.85	84.45	94.06	103.60	113.23	122.83
	KW	1.02	1.14	1.29	1.45	1.64	1.86	2.11
35.0 (1.7)	TCG	22.12	21.01	19.93	18.85	17.73	16.58	15.42
	SDT	66.11	75.65	85.18	94.74	104.34	113.87	123.24
	KW	1.01	1.14	1.28	1.45	1.64	1.85	2.10
40.0 (4.4)	TCG	24.39	23.20	22.02	20.84	19.63	18.38	17.10
	SDT	66.98	76.46	85.94	95.47	105.03	114.55	123.89
	KW	1.00	1.13	1.27	1.44	1.63	1.85	2.09
45.0 (7.2)	TCG	26.81	25.52	24.25	22.98	21.66	20.30	18.82
	SDT	67.95	77.35	86.78	96.20	105.73	115.26	124.22
	KW	0.99	1.12	1.27	1.43	1.62	1.84	2.08
50.0 (10.0)	TCG	29.40	28.01	26.62	25.24	23.82	22.35	20.77
	SDT	68.92	78.23	87.67	97.10	106.54	116.01	124.83
	KW	0.98	1.11	1.26	1.42	1.61	1.83	2.07
55.0 (12.8)	TCG	32.14	30.64	29.16	27.64	26.10	24.55	22.86
	SDT	70.02	79.31	88.59	98.02	107.44	116.76	125.64
	KW	0.97	1.10	1.24	1.41	1.79	1.83	2.06
26SPA630W003								
30.0 (-1.1)	TCG	25.30	23.61	22.14	20.81	19.59	18.39	17.17
	SDT	67.82	77.25	86.76	96.32	105.85	115.40	124.95
	KW	1.27	1.48	1.69	1.92	2.15	2.41	2.70
35.0 (1.7)	TCG	27.73	26.00	24.46	23.07	21.73	20.41	19.05
	SDT	68.77	78.15	87.63	97.12	106.67	116.19	125.65
	KW	1.28	1.48	1.69	1.91	2.15	2.42	2.71
40.0 (4.4)	TCG	30.33	28.57	26.97	25.49	24.03	22.59	21.10
	SDT	69.82	79.16	88.59	98.04	107.57	117.02	126.41
	KW	1.29	1.48	1.69	1.91	2.15	2.42	2.71
45.0 (7.2)	TCG	33.17	31.35	29.67	28.08	26.53	24.94	23.31
	SDT	70.82	80.18	89.63	99.06	108.50	117.91	127.15
	KW	1.30	1.49	1.69	1.91	2.15	2.41	2.71
50.0 (10.0)	TCG	36.19	34.31	32.57	30.89	29.21	27.47	25.65
	SDT	71.95	81.32	90.70	100.04	109.46	118.85	128.18
	KW	1.32	1.49	1.69	1.90	2.14	2.41	2.71
55.0 (12.8)	TCG	39.43	37.51	35.67	33.88	32.07	30.18	28.19
	SDT	73.16	82.46	91.79	101.17	110.51	119.84	129.06
	KW	1.33	1.50	1.69	1.89	2.13	2.39	2.69

Manufacturer reserves the right to change, at any time, specifications and designs without notice and without obligations.

Condenser Only Ratings (Continued)

SST °F (°C)		CONDENSER ENTERING AIR TEMPERATURES °F (°C)						
		55.0 (12.8)	65.0 (18.3)	75.0 (23.9)	85.0 (29.4)	95.0 (35.0)	105.0 (40.6)	115.0 (46.1)
26SPA636W003								
30.0 (-1.1)	TCG	28.25	27.31	26.09	24.70	23.17	21.55	19.91
	SDT	67.68	77.45	87.08	96.63	106.12	115.54	124.95
	KW	1.17	1.57	1.89	2.17	2.44	2.72	3.04
35.0 (1.7)	TCG	31.30	30.20	28.83	27.28	25.62	23.84	22.06
	SDT	68.84	78.54	88.12	97.62	107.06	116.43	125.78
	KW	1.19	1.57	1.89	2.18	2.45	2.74	3.07
40.0 (4.4)	TCG	34.58	33.31	31.78	30.05	28.22	26.31	24.35
	SDT	70.08	79.72	89.25	98.68	108.05	117.38	126.66
	KW	1.20	1.58	1.90	2.18	2.45	2.75	3.09
45.0 (7.2)	TCG	38.11	36.65	34.93	33.03	31.02	28.92	26.79
	SDT	71.43	81.00	90.45	99.82	109.14	118.37	127.62
	KW	1.22	1.59	1.89	2.18	2.46	2.76	3.11
50.0 (10.0)	TCG	41.90	40.22	38.30	36.20	33.98	31.71	29.38
	SDT	72.88	82.37	91.74	101.04	110.26	119.43	128.59
	KW	1.23	1.58	1.89	2.17	2.45	2.75	3.11
55.0 (12.8)	TCG	45.95	44.03	41.89	39.58	37.14	34.66	32.12
	SDT	74.47	83.83	93.12	102.33	111.47	120.58	129.63
	KW	1.23	1.57	1.87	2.15	2.43	2.74	3.11
26SPA642W003								
30.0 (-1.1)	TCG	34.51	32.93	31.32	29.69	27.98	26.16	24.24
	SDT	66.49	76.08	85.66	95.24	104.78	114.30	123.79
	KW	1.79	2.01	2.26	2.54	2.87	3.25	3.69
35.0 (1.7)	TCG	38.13	36.36	34.60	32.82	30.98	29.02	26.94
	SDT	67.53	77.03	86.56	96.09	105.62	115.09	124.53
	KW	1.79	2.01	2.26	2.54	2.87	3.25	3.69
40.0 (4.4)	TCG	41.99	40.07	38.16	36.21	34.21	32.09	29.83
	SDT	68.61	78.07	87.55	97.04	106.52	115.95	125.33
	KW	1.79	2.01	2.26	2.55	2.88	3.26	3.69
45.0 (7.2)	TCG	46.17	44.07	41.98	39.86	37.66	35.36	32.90
	SDT	69.80	79.19	88.62	98.06	107.47	116.86	126.18
	KW	1.79	2.01	2.26	2.55	2.88	3.26	3.70
50.0 (10.0)	TCG	50.68	48.38	46.09	43.78	41.35	38.84	36.17
	SDT	71.09	80.41	89.77	99.17	108.50	117.82	127.10
	KW	1.78	2.01	2.27	2.56	2.89	3.27	3.71
55.0 (12.8)	TCG	55.51	53.00	50.49	47.94	45.32	41.62	39.66
	SDT	72.47	81.73	91.02	100.26	109.61	118.54	128.07
	KW	1.78	2.01	2.27	2.57	2.90	3.27	3.72
26SPA648W003								
30.0 (-1.1)	TCG	40.62	38.68	36.79	34.81	32.70	30.37	27.82
	SDT	71.79	81.15	90.56	99.93	109.24	118.49	127.62
	KW	2.19	2.42	2.70	3.03	3.42	3.89	4.43
35.0 (1.7)	TCG	44.68	42.64	40.58	38.46	36.16	33.66	30.91
	SDT	73.27	82.61	91.93	101.25	110.50	119.68	128.76
	KW	2.20	2.43	2.72	3.05	3.45	3.91	4.45
40.0 (4.4)	TCG	49.05	46.87	44.64	42.34	39.86	37.13	34.16
	SDT	74.86	84.14	93.40	102.67	111.87	120.97	129.97
	KW	2.19	2.44	2.73	3.08	3.48	3.94	4.47
45.0 (7.2)	TCG	53.76	51.40	49.00	46.47	43.76	40.80	37.58
	SDT	76.58	85.79	95.03	104.18	113.29	122.31	131.23
	KW	2.19	2.45	2.75	3.10	3.51	3.97	4.50
50.0 (10.0)	TCG	58.82	56.27	53.62	50.86	47.89	44.68	41.17
	SDT	78.47	87.62	96.70	105.80	114.81	123.73	132.56
	KW	2.19	2.46	2.77	3.14	3.55	4.02	4.55
55.0 (12.8)	TCG	64.19	61.41	58.53	55.50	52.25	48.74	44.94
	SDT	80.42	89.48	98.52	107.52	116.44	125.26	133.98
	KW	2.18	2.47	2.80	3.17	3.59	4.07	4.60

Manufacturer reserves the right to change, at any time, specifications and designs without notice and without obligations.

Condenser Only Ratings (Continued)

SST °F (°C)		CONDENSER ENTERING AIR TEMPERATURES °F (°C)						
		55.0 (12.8)	65.0 (18.3)	75.0 (23.9)	85.0 (29.4)	95.0 (35.0)	105.0 (40.6)	115.0 (46.1)
26SPA660W003								
30.0 (-1.1)	TCG	48.39	46.46	44.41	42.14	39.61	36.87	33.84
	SDT	71.12	80.58	90.03	99.42	108.76	118.03	127.21
	KW	2.67	2.98	3.33	3.75	4.24	4.81	5.47
35.0 (1.7)	TCG	53.57	51.42	49.13	46.67	43.97	40.91	37.84
	SDT	72.66	82.04	91.40	100.74	110.03	119.24	128.38
	KW	2.67	2.99	3.35	3.78	4.27	4.83	5.49
40.0 (4.4)	TCG	59.08	56.66	54.16	51.46	48.53	45.25	42.05
	SDT	74.29	83.58	92.90	102.16	111.41	120.49	129.64
	KW	2.68	3.01	3.38	3.81	4.30	4.86	5.52
45.0 (7.2)	TCG	64.91	62.23	59.44	56.52	53.39	50.05	46.42
	SDT	76.02	85.23	94.44	103.64	112.79	121.87	130.94
	KW	2.69	3.03	3.41	3.84	4.34	4.92	5.57
50.0 (10.0)	TCG	71.04	68.07	65.01	61.78	58.44	54.85	51.01
	SDT	77.84	86.96	96.08	105.18	114.28	123.31	132.27
	KW	2.71	3.06	3.45	3.89	4.40	4.97	5.63
55.0 (12.8)	TCG	77.48	74.17	70.81	67.33	63.68	59.82	55.73
	SDT	79.79	88.86	97.81	106.85	115.85	124.79	133.68
	KW	2.75	3.10	3.50	3.95	4.46	5.04	5.70

KW - Outdoor Unit Kilowatts Only.
SDT -Saturated Temperature Leaving Compressor (°F)
SST -Saturated Temperature Entering Compressor (°F/°C)
TCG -Gross Cooling Capacity (1000 Btuh)

GUIDE SPECIFICATIONS

Air-cooled, split-system air conditioner
26SPA6
1.5 to 5 nominal tons

GENERAL

System Description

Outdoor-mounted, air-cooled, split-system air conditioner unit suitable for ground or rooftop installation. Unit consists of a hermetic compressor, an air-cooled coil, propeller-type condenser fan, and a control box. Unit will discharge supply air upward as shown on contract drawings. Unit will be used in a refrigeration circuit to match up to a packaged fan coil or coil unit.

Quality Assurance

- Unit will be rated in accordance with the latest edition of AHRI Standard 210/240.
- Unit will be certified for capacity and efficiency, and listed in AHRI directory.
- Unit construction will comply with latest edition of ANSI/ASHRAE and with NEC.
- Unit will be constructed in accordance with UL standards and will carry the UL label of approval. Unit will have c-UL-us approval.
- Unit cabinet will be capable of withstanding Federal Test Method Standard No. 141 (Method 6061) 500-hr salt spray test.
- Air-cooled condenser coils will be leak tested at 150 psig and pressure tested at 470 psig.
- Unit constructed in ISO9001 approved facility.

Delivery, Storage, and Handling

- Unit will be shipped as single package only and is stored and handled per unit manufacturer's recommendations.

Warranty (for inclusion by specifying engineer)

- U.S. and Canada only.

PRODUCTS

Equipment

Factory assembled, single piece, air-cooled air conditioner unit. Contained within the unit enclosure is all factory wiring, piping, controls, compressor, refrigerant charge Puron Advance™ (R-454B), and special features required prior to field start-up.

Unit Cabinet

Unit cabinet will be constructed of galvanized steel, bonderized, and coated with a powder coat paint.
Available with louvered coil guard only.

Fans

- Condenser fan will be direct-drive propeller type, discharging air upward.
- Condenser fan motors will be totally enclosed, 1-phase type with class B insulation and permanently lubricated bearings. Shafts will be corrosion resistant.
- Fan blades will be statically and dynamically balanced.
- Condenser fan openings will be equipped with coated steel wire safety guards.

Compressor

- Compressor will be hermetically sealed.
- Compressor will be mounted on rubber vibration isolators.

Condenser Coil

- Condenser coil will be air cooled.
- Coil will be constructed of aluminum fins mechanically bonded to copper or aluminum tubes which are then cleaned, dehydrated, and sealed.

Refrigeration Components

- Refrigeration circuit components will include liquid-line shutoff valve with sweat connections, vapor-line shutoff valve with sweat connections, system charge of Puron Advance™ (R-454B) refrigerant, and compressor oil.
- Unit will be shipped with filter drier for Puron Advance™ (R-454B) refrigerant.

Operating Characteristics

- The capacity of the unit will meet or exceed _____ Btuh at a suction temperature of _____ °F/°C. The power consumption at full load will not exceed _____ kW.
- Combination of the unit and the evaporator or fan coil unit will have a total net cooling capacity of _____ Btuh or greater at conditions of _____ CFM entering air temperature at the evaporator at _____ °F/°C wet bulb and _____ °F/°C dry bulb, and air entering the unit at _____ °F/°C.
- The system will have a SEER2 of _____ Btuh/watt or greater at DOE conditions.

Electrical Requirements

- Nominal unit electrical characteristics will be _____ v, single phase, 60 Hz. The unit will be capable of satisfactory operation within voltage limits of _____ v to _____ v.
- Nominal unit electrical characteristics will be _____ v, three phase, 60 Hz. The unit will be capable of satisfactory operation within voltage limits of _____ v to _____ v.
- Unit electrical power will be single point connection.
- Control circuit will be 24v.

Special Features

- Refer to section of this literature identifying accessories and descriptions for specific features and available enhancements.

Manufacturer reserves the right to change, at any time, specifications and designs without notice and without obligations.

© 2024 Carrier. All rights reserved.

Manufacturer reserves the right to change, at any time, specifications and designs without notice and without obligations.

Product Data

WeatherMaker® Single Packaged Rooftop

3 to 6 Nominal Tons

ecoblue™ technology

Puron ADVANCE™

48/50FE**04, 05, 06, 07

48FE: Single-Package Gas Heating/Electric Cooling Rooftop Units
50FE: Electric Cooling Rooftop Units with Optional Electric Heat
with Puron Advance™ Refrigerant (R-454B)

© 2024 Carrier

Form 48-50FE-4-7-01PD

Features/Benefits

Carrier's WeatherMaker® rooftop units (RTUs) with Puron Advance™ and EcoBlue™ Fan Technology offer an eco-friendly solution for a brighter future.

New major design features include:

- Environmentally balanced Puron Advance (R-454B) refrigerant, which delivers a 75% reduction in global warming potential (GWP) compared to the original Puron. Puron Advance's GWP of 466 easily exceeds the EPA (Environmental Protection Agency) requirement of <700 GWP.
- A patented, industry-first vane axial indoor fan system with an electronically commutated motor for simplicity and efficiency. When compared to traditional belt-driven forward curve fans, our reliable system has:
  - 75% fewer moving parts
  - Up to 40% greater efficiency
  - No fan belts, pulleys, shaft, or shaft bearings
  - Better sound and comfort control due to slow ramp-up capability
  - Internal protection from phase reversal and phase loss situations
  - High external static capability
- Reliable single (04-06 sizes) or 2-stage (07 size) cooling designs with fully active evaporator coils
- Unit control board (UCB) with intuitive indoor fan adjustment that uses simple dial and switch configuration
- Reliable copper tube/aluminum fin condenser coil with 5/16 in. tubing to help reduce refrigerant charge and weight versus prior designs
- For 48FE Ultra Low NOx units ONLY (sizes 04-06 only and excluding 575-v units): Carrier-exclusive Ultra Low NOx gas heat emissions burner box and heat exchanger design that provides 14 nanograms/joule (ng/j) operation

Our WeatherMaker 48/50FE 3 to 6 ton units are specifically designed to fit on Carrier roof curbs installed as far back as 1989. That makes replacements fast and easy, eliminating the need for curb adapters or different utility connections.

Single-stage models deliver efficiencies of up to 13.4 SEER2, while two-stage models deliver efficiencies of up to 15.5 IEER. All models are field convertible and capable of either vertical or horizontal airflow.

With "no-strip" screw collars, handled access panels, and more, the unit is easy to install, easy to maintain, and easy to use. Your new 3 to 6 ton Carrier WeatherMaker RTU provides optimum comfort and control from a packaged rooftop.

Value-added features include:

- Optional Humidi-MiZer® adaptive dehumidification system for improved part load humidity performance
- SystemVu™ intuitive, intelligent controls option that provides:
  - Large, full text, multi-line display
  - USB flash port for data transfer
  - Built in i-Vu®, CCN, and BACnet®[1]
  - Easy-to-read refrigerant pressures shown via the display — no checking gauges
  - Quick LED Status for Run, Alert, and Fault
  - Conventional thermostat or sensor capabilities
  - Historical component runtime and starts
  - Supply air tempering
  - Network Service Tool compatibility
- Single point gas and electrical connections
- Fixed refrigerant metering devices on 3 to 5 ton models and TXV on 6 ton models
- Scroll compressors with internal line-break overload protection
- Easy-to-access tool-less filter door, filter tracks that tilt out for filter removal and replacement, and filter size consistency across units

1. Third-party trademarks and logos are the property of their respective owners.

Table of contents

	Page
Features/Benefits	2
Model Number Nomenclature	5
Capacity Ratings	7
Physical Data	11
Options and Accessories	18
Base Unit Dimensions	23
Accessory Dimensions	29
Performance Data	30
Fan Data	44
Electrical Data	101
Typical Wiring Diagrams	120
Sequence of Operation	136
Application Data	139
Guide Specifications — 48FE	141
Guide Specifications — 50FE	154

Features/Benefits (cont)

Easy to install

All 3 to 6 ton WeatherMaker units are field-convertible to horizontal airflow, which makes it easy to adjust to unexpected jobsite complications. Our units are light, making them easy to replace, and our standard integrated unit control board (UCB) has simple, fast, clearly labeled plug-in connection points that reduce installation time. Should a job need additional features, our large control box provides room to work and mount Carrier accessories.

Easy to maintain

With the EcoBlue vane axial fan system and a direct drive ECM motor, belts and pulleys are a thing of the past. Should an adjustment be necessary, it can easily be made via the UCB in the control box. For regular service activities, our easy-access handles provide a quick solution to all commonly accessed service panels, and our sloped, corrosion-resistant composite drain pan sheds water and will not rust. Service gauge connections are included on compressor suction/discharge lines and before and after the filter drier to monitor system operation during maintenance.

Easy to use

Carrier's re-designed unit control board puts all connections and troubleshooting points in one convenient place. Most low voltage connections use the same board and are easy to access. Setting up the fan is simple using an intuitive switch and rotary dial arrangement. Our rooftops have high and low-pressure switches, a filter drier, and 2-in. filters standard.

For 48FE Ultra Low NOx units ONLY: the integrated gas control board operates an intelligent multi speed gas heat inducer motor to help reduce the ultra low NOx emissions. Note that:

1. Units cannot operate with Liquid Propane (LP) gas.
2. Units can operate from 0 to 2000 feet altitude only.

Puron Advance™ Features

In 2018, Carrier announced Puron Advance (R-454B) as our next generation refrigerant for light commercial rooftops. With a GWP of 466 and similar working pressure and performance to R-410A, Puron Advance easily exceeds the EPA's new, stringent <700 GWP refrigerant requirement while minimizing unit redesign. Like other next generation refrigerants (R-32, etc.), R-454B is classified as an "A2L" refrigerant by ASHRAE (American Society of Heating, Refrigerating, and Air-Conditioning Engineers). This designation means that R-454B is "mildly flammable" under certain conditions. While this is a change from legacy "A1 — No Flame Propagation" refrigerants like Puron (R-410A), A2Ls are still very low on the flammability scale and quite safe for use. A2L refrigerants are difficult to ignite and have an extremely low flame speed — much less so than natural gas, propane, or even rubbing alcohol. At Carrier, we are committed to safety. As such, all of our Puron Advance rooftop units include a factory-installed dissipation control board and leak sensor designed to last the lifetime of the unit. This system is certified to UL 60335-2-40 and designed to work right away, without any field configuration or wiring. In the event of a leak, these systems automatically identify and resolve the issue by safely dissipating the refrigerant to ensure there is no risk to equipment, buildings, or occupants.

EcoBlue™ Technology

Our direct drive EcoBlue indoor fan system uses a vane axial fan and electronically commutated motor. The benefit is clear: when compared to legacy belt drive systems, this vane axial design has 75% fewer moving parts, uses up to 40% less energy, and has no belts, blower bearings, or shaft.

Streamlined control and integration

Carrier controllers make connecting WeatherMaker rooftops to existing building automation systems easy. The units are compatible with conventional thermostat controls, SystemVu controls, and third-party building management systems (BMS).

Operating efficiency and flexibility

The 48/50FE rooftops meet ASHRAE 90.1 and IECC®[1] (International Energy Conservation Code) minimum efficiency requirements.

Comfort control

Carrier's patented Humidi-MiZer adaptive dehumidification system is an all-inclusive, factory-installed option on gas heating/electric cooling and electric cooling/electric heat models. This system provides reliable, flexible operation to meet indoor part load sensible and latent requirements.

---

1. Third-party trademarks and logos are the property of their respective owners.

Features/Benefits (cont)

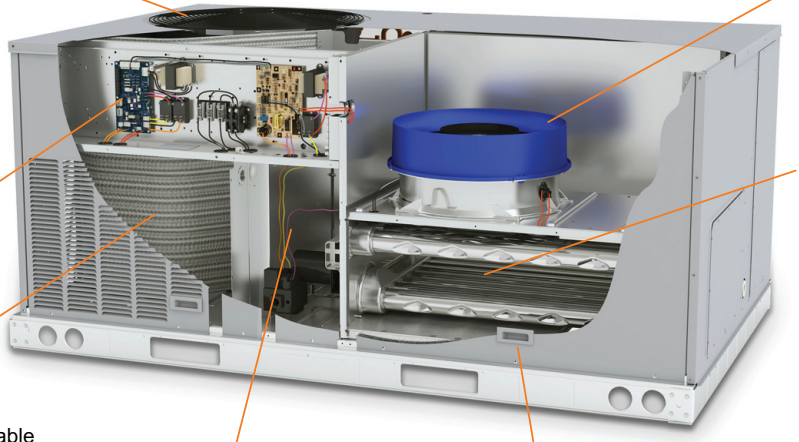

High Efficiency Outdoor Fan
– Non-corrosive blade
– Balanced blade
– Efficient airflow collar

Vane Axial Indoor Fan
– Direct drive ECM
– Slow ramp up
– Phase loss protection
– No belts or pulleys

Unit controls
– Base unit controller
  Switch/dial fan setting
  Large terminal connections
– SystemVu™ option
  Large Display
  Quick LED status
  i-Vu®, CCN®, BACnet

Heating
– Gas Heating
  – Induced draft heat exchanger
  – Multiple sizes available
  – Efficient dimpled gas design
– Electric Heating
  – Multiple sizes available
  – Single point power

Efficient Coils
– Round tube/plate fin
– Copper/Aluminum
– Special coating available
– New 5/16 in. condenser tube
– Humidi-MiZer® system available

Compression
– Fully hermetic scroll
– Internally protected
– Single stage (3 to 5 tons)
– Two stage (6 tons)

Cabinet Design
– Heavy gauge base rails
– Large handled access panels
– Tool-less filter access door
– Replacement “original” fit design

Model number nomenclature

48FE Model Number Nomenclature

Position:	1	2	3	4	5	6	7	8	9	10	11	12	13	14	15	16	17	18
Example:	4	8	F	E	D	A	0	4	A	2	A	6	-	0	A	0	A	0

Unit Heat Type
48 = Gas Heat Packaged Rooftop

Model Series — WeatherMaker®
FE = Entry Tier Puron Advance™

Heat Size
D = Low Gas Heat
E = Medium Gas Heat
F = High Gas Heat
G = Ultra Low NOx, Low Heat[a,b]
H = Ultra Low NOx, High Heat[a,b]
L = Low NOx, Low Heat
S = Low Heat with Stainless Steel Exchanger
R = Medium Heat with Stainless Steel Exchanger
T = High Heat with Stainless Steel Exchanger

Refrig. Systems Options
A = Std One Stage Cooling Models[a]
B = Std One Stage Cooling Models with Humidi-MiZer® [a,c]
M = Single Circuit, Two Stage Cooling Models[c]
N = Single Circuit, Two Stage Cooling Models with Humidi-MiZer[c,d]

Cooling Tons
04 = 3 tons
05 = 4 tons
06 = 5 tons
07 = 6 tons

Sensor Options
A = None
B = Return Air (RA) Smoke Detector
C = Supply Air (SA) Smoke Detector
D = RA + SA Smoke Detector
J = Condensate Overflow Switch
K = Condensate Overflow Switch and RA Smoke Detector
L = Condensate Overflow Switch and RA + SA Smoke Detectors
M = Condensate Overflow Switch and SA Smoke Detector

Fan Options
2 = Standard/Medium Static — EcoBlue Vane Axial Fan
3 = High Static — EcoBlue Vane Axial Fan
5 = Standard/Medium Static — EcoBlue Vane Axial Fan and Filter Status Switch
6 = High Static — EcoBlue Vane Axial Fan and Filter Status Switch

Coil Options (Outdoor - Indoor — Hail Guard)
A = Al/Cu - Al/Cu
B = Precoat Al/Cu - Al/Cu
C = E-coat Al/Cu - Al/Cu
D = E-coat Al/Cu - E-coat Al/Cu
M = Al/Cu - Al/Cu — Louvered Hail Guard
N = Precoat Al/Cu - Al/Cu — Louvered Hail Guard
P = E-coat Al/Cu - Al/Cu — Louvered Hail Guard
Q = E-coat Al/Cu - E-coat Al/Cu — Louvered Hail Guard
R = Cu/Cu - Al/Cu — Louvered Hail Guard
S = Cu/Cu - Cu/Cu — Louvered Hail Guard

Voltage
1 = 575-3-60
3 = 208/230-1-60[a,f]
5 = 208/230-3-60
6 = 460-3-60

Design Revision
- = Factory Design Revision

Base Unit Controls
0 = Electromechanical Controls (allows for use of field-installed economizers)
3 = SystemVu™ Controls
8 = Electromechanical Controls with POL224 EconomizerONE (with Fault Detection and Diagnostic)

Intake / Exhaust Options
A = None
B = Standard Leak Economizer with Barometric Relief
F = Standard Leak Enthalpy Economizer with Barometric Relief
L = ULL (Ultra Low Leak) Temperature Economizer with Barometric Relief and CO_2 Sensor
M = ULL Enthalpy Economizer with Barometric Relief and CO_2 Sensor
U = ULL Temperature Economizer with Barometric Relief
W = ULL Enthalpy Economizer with Barometric Relief

Service Options
0 = None
1 = Unpowered Convenience Outlet (NPCO)
2 = Powered Convenience Outlet (PCO)
3 = Hinged Panels (HP)
4 = Hinged Panels + NPCO
5 = Hinged Panels + PCO
6 = MERV-13 Filters (M13)
7 = NPCO + MERV-13 Filters
8 = PCO + MERV-13 Filters
9 = Hinged Panels + MERV-13 Filters
A = HP + NPCO + MERV-13 Filters
B = HP + PCO + MERV-13 Filters

Electrical Options
A = None
C = Non-Fused Disconnect (NFDC)
D = Thru-the-Base (TTB) Connections
F = Non-Fused Disconnect and TTB Connections
N = Phase Monitor Protection (PMR)
Q = PMR + NFDC
R = PMR + TTB
T = PMR + NFDC + TTB
1 = HSCCR[d] (High Short Circuit Current Rating)
2 = HSCCR[d] + TTB

Packaging & Seismic Compliance
0 = Standard

NOTE(S):
[a] Size 04/05/06 models only.
[b] Not available on 575-v units.
[c] Units with Humidi-MiZer System include Low Ambient controller.
[d] Size 07 models only.
[e] HSCCR is not available on units with: Humidi-MiZer System, Powered Convenience Outlet, Phase Loss Monitor, Non-Fused Disconnect, or 575-v.
[f] The following are not available as a factory-installed options for models with this voltage code: Humidi-MiZer System, Coated Coils or Cu Fin Coils, Louvered Hail Guards, Economizer, Powered Convenience Outlet, or Upgraded MERV filters.

Model number nomenclature (cont)

50FE Model Number Nomenclature

Position:	1	2	3	4	5	6	7	8	9	10	11	12	13	14	15	16	17	18
Example:	5	0	F	E	-	A	0	4	A	2	A	6	-	0	A	0	A	0

Unit Heat Type
50 = Cooling Only Packaged Rooftop with Optional Electric Heat

Model Series — WeatherMaker®
FE = Entry Tier Puron Advance™

Heat Size
- = No Heat
(Field Installed Available)

Refrig. Systems Options
A = Std One Stage Cooling Models[a]
B = Std One Stage Cooling Models with Humidi-MiZer® [a, b]
M = Single Circuit, Two Stage Cooling Models[c]
N = Single Circuit, Two Stage Cooling Models with Humidi-MiZer[b,c]

Cooling Tons
04 = 3 tons
05 = 4 tons
06 = 5 tons
07 = 6 tons

Sensor Options
A = None
B = Return Air (RA) Smoke Detector
C = Supply Air (SA) Smoke Detector
D = RA + SA Smoke Detector
J = Condensate Overflow Switch
K = Condensate Overflow Switch and RA Smoke Detector
L = Condensate Overflow Switch and RA + SA Smoke Detectors
M = Condensate Overflow Switch and SA Smoke Detector

Fan Options
2 = Standard/Medium Static — EcoBlue Vane Axial Fan
3 = High Static — EcoBlue Vane Axial Fan
5 = Standard/Medium Static — EcoBlue Vane Axial Fan and Filter Status Switch
6 = High Static — EcoBlue Vane Axial Fan and Filter Status Switch

Coil Options (Outdoor - Indoor — Hail Guard)
A = Al/Cu - Al/Cu
B = Precoat Al/Cu - Al/Cu
C = E-coat Al/Cu - Al/Cu
D = E-coat Al/Cu - E-coat Al/Cu
M = Al/Cu - Al/Cu — Louvered Hail Guard
N = Precoat Al/Cu - Al/Cu — Louvered Hail Guard
P = E-coat Al/Cu - Al/Cu — Louvered Hail Guard
Q = E-coat Al/Cu - E-coat Al/Cu — Louvered Hail Guard
R = Cu/Cu - Al/Cu — Louvered Hail Guard
S = Cu/Cu - Cu/Cu — Louvered Hail Guard

Voltage
1 = 575-3-60
3 = 208/230-1-60[a,e]
5 = 208/230-3-60
6 = 460-3-60

Design Revision
- = Factory Design Revision

Base Unit Controls
0 = Electromechanical Controls (allows for use of field-installed economizers)
3 = SystemVu™ Controls
8 = Electromechanical Controls with POL224 EconomizerONE (with Fault Detection and Diagnostic)

Intake / Exhaust Options
A = None
B = Standard Leak Economizer with Barometric Relief
F = Standard Leak Enthalpy Economizer with Barometric Relief
L = ULL (Ultra Low Leak) Temperature Economizer with Barometric Relief and CO_2 Sensor
M = ULL Enthalpy Economizer with Barometric Relief and CO_2 Sensor
U = ULL Temperature Economizer with Barometric Relief
W = ULL Enthalpy Economizer with Barometric Relief

Service Options
0 = None
1 = Unpowered Convenience Outlet (NPCO)
2 = Powered Convenience Outlet (PCO)
3 = Hinged Panels (HP)
4 = Hinged Panels + NPCO
5 = Hinged Panels + PCO
6 = MERV-13 Filters (M13)
7 = NPCO + MERV-13 Filters
8 = PCO + MERV-13 Filters
9 = Hinged Panels + MERV-13 Filters
A = HP + NPCO + MERV-13 Filters
B = HP + PCO + MERV-13 Filters

Electrical Options
A = None
C = Non-Fused Disconnect (NFDC)
D = Thru-the-Base (TTB) Connections
F = Non-Fused Disconnect and TTB Connections
N = Phase Monitor Protection (PMR)
Q = PMR + NFDC
R = PMR + TTB
T = PMR + NFDC + TTB
1 = HSCCR[d] (High Short Circuit Current Rating)
2 = HSCCR[d] + TTB

Packaging & Seismic Compliance
0 = Standard

[a] Size 04/05/06 models only.
[b] Units with Humidi-MiZer System include Low Ambient controller.
[c] Size 07 models only.
[d] HSCCR is not available on units with: Humidi-Mizer, Phase Loss Monitor, Non-Fused Disconnect, Powered Convenience Outlet, Low Ambient Controls, or 575-v.
[e] The following are not available as a factory-installed options for models with this voltage code: Humidi-MiZer System, Coated Coils or Cu Fin Coils, Louvered Hail Guards, Economizer, Powered Convenience Outlet, or Upgraded MERV filters.

Capacity ratings

48FE*A 1-Phase AHRI Ratings[a,b,c,d]

48FE UNITS	COOLING STAGES	NOMINAL CAPACITY (tons)	NET COOLING CAPACITY 2 (MBH)	TOTAL POWER 2 (kW)	SEER2	EER2	RATED INDOOR AIRFLOW (cfm)
***A04**	1	3	34.0	3.0	13.4	11.5	1050
***A05**	1	4	48.0	4.2	13.4	11.5	1500
***A06**	1	5	57.5	5.0	13.4	11.4	1500

NOTE(S):

a. Rated in accordance with AHRI Standards 210/240 (04-06 size).
b. Rating are based on:
Cooling Standard: 80°F (27°C) db, 67°F (19°C) wb indoor air temperature and 95°F (35°C) db outdoor air temperature.
c. Units comply with ASHRAE 90.1-2016 (American Society of Heating, Refrigerating, and Air-Conditioning Engineers) and DOE-2023 (Department of Energy) Energy Standard for minimum SEER2 and EER2 requirements.
d. 48FE units comply with US Energy Policy Act (2005). To evaluate code compliance requirements, refer to state and local codes.

48FE*A/M 3-Phase AHRI Ratings[a,b,c,d]

48FE UNITS	COOLING STAGES	NOMINAL CAPACITY (tons)	NET COOLING CAPACITY (MBH)	TOTAL POWER (kW)	SEER	EER
***A04**	1	3	34.4	2.9	14.0	11.80
***A05**	1	4	48.0	4.1	14.0	11.80
***A06**	1	5	57.5	5.0	14.0	11.40
***M07**	2	6	70.0	6.3	—	11.20

48FE UNITS	IEER WITH 2-SPEED INDOOR FAN MOTOR	NET COOLING CAPACITY 2 (MBH)	TOTAL POWER 2 (kW)	SEER2	EER2	RATED INDOOR AIRFLOW (cfm)
***A04**	—	34.0	3.0	13.4	11.50	1050
***A05**	—	48.0	4.2	13.4	11.50	1500
***A06**	—	57.5	5.0	13.4	11.40	1500
***M07**	15.0	—	—	—	—	2400

NOTE(S):

a. Rated in accordance with AHRI Standards 210/240 (04-06 size) and 340/360 (07 size).
b. Rating are based on:
Cooling Standard: 80°F (27°C) db, 67°F (19°C) wb indoor air temperature and 95°F (35°C) db outdoor air temperature.
IEER Standard: A measure that expresses cooling part-load EER efficiency for commercial unitary air-conditioning and heat pump equipment on the basis of weighted operation at various load capacities.
c. Units comply with ASHRAE 90.1-2016 (American Society of Heating, Refrigerating, and Air-Conditioning Engineers) requirements, as well as DOE-2018 (Department of Energy) Energy Standard for minimum SEER and EER requirements and DOE-2023 Energy Standard for minimum SEER2 and EER2 requirements. ASHRAE 90.1 requires M1 ratings on 3-phase models.
d. 48FE units comply with US Energy Policy Act (2005). To evaluate code compliance requirements, refer to state and local codes.

LEGEND

AHRI — Air-Conditioning, Heating and Refrigeration Institute
EER — Energy Efficiency Ratio
IEER — Integrated Energy Efficiency Ratio
MBH — Btuh in thousands
SEER — Seasonal Energy Efficiency Ratio

Capacity ratings (cont)

50FE-A 1-Phase AHRI Ratings[a,b,c,d]

50FE UNITS	COOLING STAGES	NOM. CAPACITY (tons)	NET COOLING CAPACITY 2 (MBH)	TOTAL POWER 2 (KW)	SEER2	EER2	RATED INDOOR AIRFLOW (cfm)
-A04	1	3	34.0	3.0	13.4	11.50	1050
-A05	1	4	48.0	4.2	13.4	11.50	1500
-A06	1	5	57.5	5.0	13.4	11.40	1500

NOTE(S):

a. Rated in accordance with AHRI Standards 210/240 (04-06 size).
b. Rating are based on:
Cooling Standard: 80°F (27°C) db, 67°F (19°C) wb indoor air temperature and 95°F (35°C) db outdoor air temperature.
c. Units comply with ASHRAE 90.1-2016 (American Society of Heating, Refrigerating, and Air-Conditioning Engineers) and DOE-2023 (Department of Energy) Energy Standard for minimum SEER2 and EER2 requirements.
d. 50FE units comply with US Energy Policy Act (2005). To evaluate code compliance requirements, refer to state and local codes.

50FE-A/M 3-Phase AHRI Ratings[a,b,c,d]

50FE UNITS	COOLING STAGES	NOMINAL CAPACITY (tons)	NET COOLING CAPACITY (MBH)	TOTAL POWER (kW)	SEER	EER
-A04	1	3	34.4	2.9	14.0	11.8
-A05	1	4	48.0	4.1	14.0	11.8
-A06	1	5	57.5	5.0	14.0	11.4
-M07	2	6	70.0	6.3	—	11.2

50FE UNITS	IEER WITH 2-SPEED INDOOR FAN MOTOR	NET COOLING CAPACITY 2 (MBH)	TOTAL POWER 2 (kW)	SEER2	EER2	RATED INDOOR AIRFLOW (cfm)
-A04	—	34.0	3.0	13.4	11.50	1050
-A05	—	48.0	4.2	13.4	11.50	1500
-A06	—	57.5	5.0	13.4	11.40	1500
-M07	15.5	—	—	—	—	2400

NOTE(S):

a. Rated in accordance with AHRI Standards 210/240 (04-06 size) and 340/360 (07 size).
b. Rating are based on:
Cooling Standard: 80°F (27°C) db, 67°F (19°C) wb indoor air temperature and 95°F (35°C) db outdoor air temperature.
IEER Standard: A measure that expresses cooling part-load EER efficiency for commercial unitary air-conditioning and heat pump equipment on the basis of weighted operation at various load capacities.
c. Units comply with ASHRAE 90.1-2016 (American Society of Heating, Refrigerating, and Air-Conditioning Engineers) requirements, as well as DOE-2018 (Department of Energy) Energy Standard for minimum SEER and EER and DOE-2023 Energy Standards for minimum SEER2 and EER2 requirements. ASHRAE 90.1 requires M1 ratings on 3-phase models.
d. 50FE units comply with US Energy Policy Act (2005). To evaluate code compliance requirements, refer to state and local codes.

LEGEND

AHRI — Air-Conditioning, Heating and Refrigeration Institute
EER — Energy Efficiency Ratio
IEER — Integrated Energy Efficiency Ratio
MBH — Btuh in thousands
SEER — Seasonal Energy Efficiency Ratio

Capacity ratings (cont)

Sound Ratings Table

48/50FE UNIT	COOLING STAGES	OUTDOOR SOUND (dB) at 60 Hz[a,b]								
		A-Weighted[c]	63	125	250	500	1000	2000	4000	8000
**04	1	79	85.6	84.7	80.5	76.0	72.4	68.0	62.8	59.3
**05	1	79	85.6	84.7	80.5	76.0	72.4	68.0	62.8	59.3
**06	1	79	85.6	84.7	80.5	76.0	72.4	68.0	62.8	59.3
**07	2	79	85.6	84.7	80.5	76.0	72.4	68.0	62.8	59.3

NOTE(S):

a. Outdoor sound data is measured in accordance with AHRI.
b. Measurements are expressed in terms of sound power. Do not compare these values to sound pressure values because sound pressure depends on specific environmental factors which normally do not match individual applications. Sound power values are independent of the environment and therefore more accurate.
c. A-weighted sound ratings filter out very high and very low frequencies, to better approximate the response of "average" human ear. A-weighted measurements for Carrier units are taken in accordance with AHRI.

LEGEND

db — Decibel

Minimum - Maximum Airflow Ratings (cfm) — Natural Gas and Propane

VOLTAGE	UNIT	HEAT LEVEL	COOLING				HEATING[a]	
			Minimum Airflow cfm	Minimum 2-Speed Airflow (Low Speed)	Minimum 2-Speed Airflow (High Speed)	Maximum Airflow cfm	Minimum Airflow cfm	Maximum Airflow cfm
1 PHASE	48FE**04	LOW	900	—	—	1500	890	1950
		MED	900	—	—	1500	800	1520
		HIGH	900	—	—	1500	—	—
	48FE**05	LOW	1200	—	—	2000	890	2440
		MED	1200	—	—	2000	1050	2280
		HIGH	1200	—	—	2000	1220	2170
	48FE**06	LOW	1500	—	—	2500	890	3250
		MED	1500	—	—	2500	1050	2730
		HIGH	1500	—	—	2500	1220	2790
3 PHASE	48FE**04	LOW	900	—	—	1500	910	2010
		MED	900	—	—	1500	960	1630
		HIGH	900	—	—	1500	—	—
	48FE**05	LOW	1200	—	—	2000	910	2010
		MED	1200	—	—	2000	1250	2330
		HIGH	1200	—	—	2000	1390	2220
	48FE**06	LOW	1500	—	—	2500	910	2510
		MED	1500	—	—	2500	1250	2720
		HIGH	1500	—	—	2500	1390	2780
	48FE**07	LOW	1800	1200	1800	3000	910	3350
		MED	1800	1200	1800	3000	1250	3260
		HIGH	1800	1200	1800	3000	1390	3170

NOTE(S):

a. Heating rating values are identical for aluminum heat exchangers and stainless steel heat exchangers.

Minimum - Maximum Airflow Ratings (cfm) — 48FE Ultra Low NOx Units

48FE ULTRA LOW NOx UNIT SIZE	HEAT LEVEL	COOLING				ULTRA LOW NOx HEATING	
		Minimum Airflow cfm	Minimum 2-Speed Airflow (Low Speed)	Minimum 2-Speed Airflow (High Speed)	Maximum Airflow cfm	Minimum Airflow at 300 cfm/ton	Maximum Airflow at 300 cfm/ton
04	LOW	900	—	—	1500	900	1500
	MED	900	—	—	1500	1030	1500
05	LOW	1200	—	—	2000	1200	2000
	MED	1200	—	—	2000	1200	2000
06	LOW	1500	—	—	2500	1500	2500
	MED	1500	—	—	2500	1500	2500

Capacity ratings (cont)

Minimum - Maximum Airflow Ratings (cfm) — Cooling Units and Accessory Electric Heat

50FE UNIT SIZE	COOLING				ELECTRIC HEAT[a]	
	Minimum Airflow cfm	Minimum 2-Speed Airflow (Low Speed)	Minimum 2-Speed Airflow (High Speed)	Maximum Airflow cfm	Minimum Airflow cfm	Maximum Airflow cfm
-*04	900	—	—	1500	900	1500
-*05	1200	—	—	2000	1200	2000
-*06	1500	—	—	2500	1500	2500
-*07	1800	1200	1800	3000	1800	3000

NOTE(S):

a. Electric heat modules are available as field-installed accessories for 50FE units.

Heat Rating Table — Natural Gas and Propane

48FE UNIT		GAS HEAT	AL/SS HEAT EXCHANGER		TEMPERATURE RISE (°F)	THERMAL EFFICIENCY (%)	AFUE EFFICIENCY (%)
			Input/Output Stage 1 (MBH)	Input/Output Stage 2 (MBH)			
1 PHASE	04	LOW	—	65/53	25-55	81	81
		MED	—	90/73	45-85	82	81
		HIGH	—	—	—	—	—
	05	LOW	—	65/53	20-55	81	81
		MED	—	90/73	30-65	82	81
		HIGH	—	130/106	45-80	81	81
	06	LOW	—	65/53	15-55	81	81
		MED	—	90/73	25-65	82	81
		HIGH	—	130/106	35-80	81	81
3 PHASE	04	LOW	—	67/54	25-55	81	—
		MED	82/65	110/88	50-85	80	—
		HIGH	—	—	—	—	—
	05	LOW	—	67/54	25-55	81	—
		MED	—	110/88	35-65	80	—
		HIGH	120/96	150/120	50-80	80	—
	06	LOW	—	67/54	20-55	81	—
		MED	—	110/88	30-65	80	—
		HIGH	120/96	150/120	40-80	80	—
	07	LOW	—	67/54	15-55	81	—
		MED	—	110/88	25-65	80	—
		HIGH	120/96	150/120	35-80	80	—

Heat Rating Table — Ultra Low NOx

48FE ULTRA LOW NOx UNIT		GAS HEAT	INPUT/OUTPUT (MBH)	TEMPERATURE RISE (°F)	THERMAL EFFICIENCY (%)	AFUE EFFICIENCY (%)
1 PHASE	04	LOW	60 / 49	20-50	81	82
		MED	82 / 66	20-60	81	81
	05	LOW	60 / 49	20-50	81	82
		MED	82 / 66	20-60	81	81
	06	LOW	60 / 49	15-45	81	82
		MED	82 / 66	20-60	81	81
3 PHASE	04	LOW	60 / 49	20-50	81	—
		MED	82 / 66	20-60	81	81
	05	LOW	60 / 49	20-50	81	—
		MED	82 / 66	20-60	81	81
	06	LOW	60 / 49	15-45	81	—
		MED	82 / 66	20-60	81	81

Physical data

48/50FE 3 and 4 Ton Units Physical Data

48/50FE UNIT	48/50FE*A04	48/50FE*B04	48/50FE*A05	48/50FE*B05
NOMINAL TONS	3	3	4	4
BASE UNIT OPERATING WT (lb) 48/50FE[a]	482/437	482/437	543/498	543/498
REFRIGERATION SYSTEM				
No. Circuits/No. Compressors/Type	1 / 1 / Scroll	1 / 1 / Scroll	1 / 1 / Scroll	1 / 1 / Scroll
Puron Advance™ R-454B Charge A/B (lb-oz)	4-5	—	8-13	—
Humidi-MiZer® Puron Advance R-454B Charge A/B (lb-oz)	—	6-11	—	12-14
Oil A/B (oz)	25	25	42	42
Metering Device	Acutrol	Acutrol	Acutrol	Acutrol
Humidi-MiZer Metering Device	—	TXV-Acutrol	—	TXV-Acutrol
High-Pressure Trip/Reset (psig)	630/505	630/505	630/505	630/505
Low-Pressure Trip/Reset (psig)	54/117	27/44	54/117	27/44
EVAPORATOR COIL				
Material (Tube/Fin)	Cu/Al	Cu/Al	Cu/Al	Cu/Al
Coil Type	3/8 in. RTPF	3/8 in. RTPF	3/8 in. RTPF	3/8 in. RTPF
Rows/FPI	2/15	2/15	3/15	3/15
Total Face Area (ft^2)	5.5	5.5	5.5	5.5
Condensate Drain Connection Size	3/4 in.	3/4 in.	3/4 in.	3/4 in.
CONDENSER COIL				
Material	Cu/Al	Cu/Al	Cu/Al	Cu/Al
Coil Type	5/16 in. RTPF	5/16 in. RTPF	5/16 in. RTPF	5/16 in. RTPF
Rows/FPI	1/18	1/18	2/18	2/18
Total Face Area (ft^2)	14.6	14.6	15.9	15.9
HUMIDI-MIZER COIL				
Material	—	Cu/Al	—	Cu/Al
Coil Type	—	3/8 in. RTPF	—	3/8 in. RTPF
Rows/FPI	—	1/17	—	2/17
Total Face Area (ft^2)	—	4.1	—	4.1
EVAPORATOR FAN AND MOTOR				
Standard/Medium Static 1 Phase				
Motor Qty/Drive Type	1 / Direct	—	1 / Direct	—
Maximum Cont Bhp	0.71	—	1.06	—
Rpm Range	219-2190	—	217-2170	—
Fan Qty/Type	1 / Vane Axial	—	1 / Vane Axial	—
Fan Diameter (in.)	16.6 in.	—	16.6 in.	—
High Static 1 Phase				
Motor Qty/Drive Type	1 / Direct	—	1 / Direct	—
Maximum Cont Bhp	1.07	—	1.53	—
Rpm Range	249-2490	—	246-2460	—
Fan Qty/Type	1 / Vane Axial	—	1 / Vane Axial	—
Fan Diameter (in.)	16.6 in.	—	16.6 in.	—
Standard/Medium Static 3 Phase				
Motor Qty/Drive Type	1 / Direct	1 / Direct	1 / Direct	1 / Direct
Maximum Cont Bhp	0.71	0.71	1.06	1.06
Rpm Range	219-2190	219-2190	217-2170	217-2170
Fan Qty/Type	1 / Vane Axial	1 / Vane Axial	1 / Vane Axial	1 / Vane Axial
Fan Diameter (in.)	16.6 in.	16.6 in.	16.6 in.	16.6 in.
High Static 3 Phase				
Motor Qty/Drive Type	1 / Direct	1 / Direct	1 / Direct	1 / Direct
Maximum Cont Bhp	1.07	1.07	1.96	1.96
Rpm Range	249-2490	249-2490	266-2660	266-2660
Fan Qty/Type	1 / Vane Axial	1 / Vane Axial	1 / Vane Axial	1 / Vane Axial
Fan Diameter (in.)	16.6 in.	16.6 in.	16.6 in.	16.6 in.
CONDENSER FAN AND MOTOR				
Qty / Motor Drive Type	1 / Direct	1 / Direct	1 / Direct	1 / Direct
Motor HP/Rpm	1/4 / 1100	1/4 / 1100	1/4 / 1100	1/4 / 1100
Fan Diameter (in.)	23 in.	23 in.	23 in.	23 in.

48/50FE 3 and 4 Ton Units Physical Data (cont)

48/50FE UNIT	48/50FE*A04	48/50FE*B04	48/50FE*A05	48/50FE*B05
FILTER				
RA Filter Qty / Size (in.)	2 / 16 x 25 x 2	2 / 16 x 25 x 2	2 / 16 x 25 x 2	2 / 16 x 25 x 2
OA Inlet Screen Qty / Size (in.)	1 / 20 x 24 x 1	1 / 20 x 24 x 1	1 / 20 x 24 x 1	1 / 20 x 24 x 1

NOTE(S):

a. Base unit operating weight does not include weight of options.

LEGEND

Bhp — Brake Horsepower
FPI — Fins Per Inch
OA — Outdoor Air
RA — Return Air

Physical data (cont)

48/50FE 5 and 6 Ton Units Physical Data

48/50FE UNIT	48/50FE*A06	48/50FE*B06	48/50FE*M07	48/50FE*N07
NOMINAL TONS	5	5	6	6
BASE UNIT OPERATING WT (lb) 4850FE[a]	556/511	556/511	607/562	607/562
REFRIGERATION SYSTEM				
No. Circuits/No. Compressors/Type	1 / 1 / Scroll	1 / 1 / Scroll	1 / 1 / 2-Stage Scroll	1 / 1 / 2-Stage Scroll
Puron Advance™ R-454B Charge A/B (lb-oz)	7-11	—	7-13	—
Humidi-MiZer® Puron Advance R-454B Charge A/B (lb-oz)	—	14	—	18-6
Oil A/B (oz)	42	42	42	42
Metering Device	Acutrol	Acutrol	TXV	TXV
Humidi-MiZer Metering Device	—	TXV-Acutrol	—	TXV
High-Pressure Trip/Reset (psig)	630/505	630/505	630/505	630/505
Low-Pressure Trip/Reset (psig)	54/117	27/44	54/117	27/44
EVAPORATOR COIL				
Material (Tube/Fin)	Cu/Al	Cu/Al	Cu/Al	Cu/Al
Coil Type	3/8 in. RTPF	3/8 in. RTPF	3/8 in. RTPF	3/8 in. RTPF
Rows/FPI	4/15	4/15	4/15	4/15
Total Face Area (ft^2)	5.5	5.5	7.3	7.3
Condensate Drain Connection Size	3/4 in.	3/4 in.	3/4 in.	3/4 in.
CONDENSER COIL				
Material	Cu/Al	Cu/Al	Cu/Al	Cu/Al
Coil Type	5/16 in. RTPF	5/16 in. RTPF	5/16 in. RTPF	5/16 in. RTPF
Rows/FPI	2/18	2/18	2/18	2/18
Total Face Area (ft^2)	15.9	15.9	15	15
HUMIDI-MIZER COIL				
Material	—	Cu/Al	—	Cu/Al
Coil Type	—	3/8 in. RTPF	—	3/8 in. RTPF
Rows/FPI	—	2/17	—	2/17
Total Face Area (ft^2)	—	4.1	—	5.5
EVAPORATOR FAN AND MOTOR				
Standard/Medium Static 1 Phase				
Motor Qty/Drive Type	1 / Direct	—	—	—
Maximum Cont Bhp	1.44	—	—	—
Rpm Range	239-2390	—	—	—
Fan Qty/Type	1 / Vane Axial	—	—	—
Fan Diameter (in.)	16.6 in.	—	—	—
High Static 1 Phase				
Motor Qty/Drive Type	1 / Direct	—	—	—
Maximum Cont Bhp	1.96	—	—	—
Rpm Range	266-2660	—	—	—
Fan Qty/Type	1 / Vane Axial	—	—	—
Fan Diameter (in.)	16.6 in.	—	—	—
Standard/Medium Static 3 Phase				
Motor Qty/Drive Type	1 / Direct	1 / Direct	1 / Direct	1 / Direct
Maximum Cont Bhp	1.44	1.44	1.76	1.76
Rpm Range	239-2390	239-2390	253-2530	253-2530
Fan Qty/Type	1 / Vane Axial	1 / Vane Axial	1 / Vane Axial	1 / Vane Axial
Fan Diameter (in.)	16.6 in.	16.6 in.	16.6 in.	16.6 in.
High Static 3 Phase				
Motor Qty/Drive Type	1 / Direct	1 / Direct	1 / Direct	1 / Direct
Maximum Cont Bhp	2.43	2.43	2.43	2.43
Rpm Range	284-2836	284-2836	284-2836	284-2836
Fan Qty/Type	1 / Vane Axial	1 / Vane Axial	1 / Vane Axial	1 / Vane Axial
Fan Diameter (in.)	16.6 in.	16.6 in.	16.6 in.	16.6 in.
CONDENSER FAN AND MOTOR				
Qty / Motor Drive Type	1 / Direct	1 / Direct	1 / Direct	1 / Direct
Motor HP/Rpm	1/4 / 1100	1/4 / 1100	1/4 / 1100	1/4 / 1100
Fan Diameter (in.)	23 in.	23 in.	23 in.	23 in.

48/50FE 5 and 6 Ton Units Physical Data (cont)

48/50FE UNIT	48/50FE*A06	48/50FE*B06	48/50FE*M07	48/50FE*N07
FILTER				
RA Filter Qty / Size (in.)	2 / 16 x 25 x 2	2 / 16 x 25 x 2	4 / 16 x 16 x 2	4 / 16 x 16 x 2
OA Inlet Screen Qty / Size (in.)	1 / 20 x 24 x 1	1 / 20 x 24 x 1	1 / 20 x 24 x 1	1 / 20 x 24 x 1

NOTE(S):

a. Base unit operating weight does not include weight of options.

LEGEND

Bhp — Brake Horsepower
FPI — Fins Per Inch
OA — Outdoor Air
RA — Return Air

48FE 3 to 5 Ton Gas Heat Data — 1-Phase Units

48FE UNIT	48FE**04	48FE**05	48FE**06
GAS CONNECTION			
No. of Gas Valves	1	1	1
Natural Gas Supply Line Pressure (in. wg)/(psig)	4-13 / 0.18-0.47	4-13 / 0.18-0.47	4-13 / 0.18-0.47
Liquid Propane Supply Line Pressure (in. wg)/(psig)	11-13 / 0.40-0.47	11-13 / 0.40-0.47	11-13 / 0.40-0.47
HEAT ANTICIPATOR SETTING (AMPS)			
First Stage	0.14	0.14	0.14
Second Stage	0.14	0.14	0.14
NATURAL GAS HEAT			
LOW			
No. of Stages / No. of Burners (total)	1 / 2	1 / 2	1 / 2
Connection Size	1/2 in. NPT	1/2 in. NPT	1/2 in. NPT
Rollout Switch Opens / Closes (°F)	195 / 115	195 / 115	195 / 115
Temperature Rise (°F)	25-55	20-55	15-55
MEDIUM			
No. of Stages / No. of Burners (total)	1 / 3	1 / 3	1 / 3
Connection Size	1/2 in. NPT	1/2 in. NPT	1/2 in. NPT
Rollout Switch Opens / Closes (°F)	195 / 115	195 / 115	195 / 115
Temperature Rise (°F)	45-85	30-65	25-65
HIGH			
No. of Stages / No. of Burners (total)	—	1 / 3	1 / 3
Connection Size	—	1/2 in. NPT	1/2 in. NPT
Rollout Switch Opens / Closes (°F)	—	195 / 115	195 / 115
Temperature Rise (°F)	—	45-80	35-80
LIQUID PROPANE HEAT			
LOW			
No. of Stages / No. of Burners (total)	1 / 2	1 / 2	1 / 2
Connection Size	1/2 in. NPT	1/2 in. NPT	1/2 in. NPT
Rollout Switch Opens / Closes (°F)	195 / 115	195 / 115	195 / 115
Temperature Rise (°F)	25-55	20-55	15-55
MEDIUM			
No. of Stages / No. of Burners (total)	1 / 3	1 / 3	1 / 3
Connection Size	1/2 in. NPT	1/2 in. NPT	1/2 in. NPT
Rollout Switch Opens / Closes (°F)	195 / 115	195 / 115	195 / 115
Temperature Rise (°F)	45-85	30-65	25-65
HIGH			
No. of Stages / No. of Burners (total)	—	1 / 3	1 / 3
Connection Size	—	1/2 in. NPT	1/2 in. NPT
Rollout Switch Opens / Closes (°F)	—	195 / 115	195 / 115
Temperature Rise (°F)	—	45-80	35-80

48FE 3 to 6 Ton Gas Heat Data — 3-Phase Units

48FE UNIT	48FE**04	48FE**05	48FE**06	48FE**07
GAS CONNECTION				
No. of Gas Valves	1	1	1	1
Natural Gas Supply Line Pressure (in. wg)/(psig)	4-13 / 0.18-0.47	4-13 / 0.18-0.47	4-13 / 0.18-0.47	4-13 / 0.18-0.47
Liquid Propane Supply Line Pressure (in. wg)/(psig)	11-13 / 0.40-0.47	11-13 / 0.40-0.47	11-13 / 0.40-0.47	11-13 / 0.40-0.47
HEAT ANTICIPATOR SETTING (AMPS)				
First Stage	0.14	0.14	0.14	0.14
Second Stage	0.14	0.14	0.14	0.14
NATURAL GAS HEAT				
LOW				
No. of Stages / No. of Burners (total)	1 / 2	1 / 2	1 / 2	1 / 2
Connection Size	1/2 in. NPT	1/2 in. NPT	1/2 in. NPT	1/2 in. NPT
Rollout Switch Opens / Closes (°F)	195 / 115	195 / 115	195 / 115	195 / 115
Temperature Rise (°F)	25-55	25-55	20-55	15-55
MEDIUM				
No. of Stages / No. of Burners (total)	2 / 3	1 / 3	1 / 3	1 / 3
Connection Size	1/2 in. NPT	1/2 in. NPT	1/2 in. NPT	1/2 in. NPT
Rollout Switch Opens / Closes (°F)	195 / 115	195 / 115	195 / 115	195 / 115
Temperature Rise (°F)	50-85	35-65	30-65	25-65
HIGH				
No. of Stages / No. of Burners (total)	—	2 / 3	2 / 3	2 / 3
Connection Size	—	1/2 in. NPT	1/2 in. NPT	1/2 in. NPT
Rollout Switch Opens / Closes (°F)	—	195 / 115	195 / 115	195 / 115
Temperature Rise (°F)	—	50-80	40-80	35-80
LIQUID PROPANE HEAT				
LOW				
No. of Stages / No. of Burners (total)	1 / 2	1 / 2	1 / 2	1 / 2
Connection Size	1/2 in. NPT	1/2 in. NPT	1/2 in. NPT	1/2 in. NPT
Rollout Switch Opens / Closes (°F)	195 / 115	195 / 115	195 / 115	195 / 115
Temperature Rise (°F)	25-55	25-55	20-55	15-55
MEDIUM				
No. of Stages / No. of Burners (total)	2 / 3	1 / 3	1 / 3	1 / 3
Connection Size	1/2 in. NPT	1/2 in. NPT	1/2 in. NPT	1/2 in. NPT
Rollout Switch Opens / Closes (°F)	195 / 115	195 / 115	195 / 115	195 / 115
Temperature Rise (°F)	50-85	35-65	30-65	25-65
HIGH				
No. of Stages / No. of Burners (total)	—	2 / 3	2 / 3	2 / 3
Connection Size	—	1/2 in. NPT	1/2 in. NPT	1/2 in. NPT
Rollout Switch Opens / Closes (°F)	—	195 / 115	195 / 115	195 / 115
Temperature Rise (°F)	—	50-80	40-80	35-80

48FE 3 to 5 Ton Ultra Low NOx Gas Heat Data — 1 and 3-Phase Units

48FE ULTRA LOW NOx UNIT	48FE**04 ULTRA LOW NOx UNIT	48FE**05 ULTRA LOW NOx UNIT	48FE**06 ULTRA LOW NOx UNIT
GAS CONNECTION			
No. of Gas Valves	1	1	1
Natural Gas Supply Line Pressure (in. wg)/(psig)	5-13 / 0.18-0.47	5-13 / 0.18-0.47	5-13 / 0.18-0.47
HEAT ANTICIPATOR SETTING (AMPS)	0.14	0.14	0.14
NATURAL GAS HEAT			
LOW			
No. of Stages / No. of Burners (total)	1 / 1	1 / 1	1 / 1
Connection Size	1/2 in. NPT	1/2 in. NPT	1/2 in. NPT
Burner Thermal Switch Opens / Closes (°F)	350 / 301	350 / 301	350 / 301
Temperature Rise (°F)	20-50	20-50	15-45
MEDIUM			
No. of Stages / No. of Burners (total)	1 / 1	1 / 1	1 / 1
Connection Size	1/2 in. NPT	1/2 in. NPT	1/2 in. NPT
Burner Thermal Switch Opens / Closes (°F)	350 / 301	350 / 301	350 / 301
Temperature Rise (°F)	20-60	20-60	20-60

Options and accessories

ITEM	FACTORY-INSTALLED OPTION	FIELD-INSTALLED ACCESSORY
GAS HEAT (48FE units only)		
Low, Medium or High Gas Heat — Aluminized Heat Exchanger[a]	X	
Low, Medium or High Gas Heat — Stainless Steel Heat Exchanger	X	
Propane Conversion Kit (48FE only)[a]		X
High Altitude Conversion Kit (48FE only)[a]		X
Flue Discharge Deflector (48FE only)		X
Flue Shield[a]		X
ELECTRIC HEAT (50FE units only)		
Electric Resistance Heaters		X
Single Point Kits		X
CABINET		
Thru-the-Base Electrical or Gas-Line Connections	X	X
Hinged Access Panels	X	
MERV-8 Filters		X
MERV-13 Filters, 2 in.		X
MERV-13 Filters, 4 in.	X	
COIL OPTIONS		
Cu/Cu Indoor and/or Outdoor Coils[b,c]	X	
Pre-coated Outdoor Coils[b]	X	
Premium, E-coated Indoor/Outdoor Coils[b]	X	
HUMIDITY CONTROL		
Humidi-MiZer® Adaptive Dehumidification System[b]	X	
CONDENSER PROTECTION		
Condenser Coil Hail Guard (louvered design)[b]	X	X
CONTROLS		
Thermostats, Temperature Sensors, and Subbases		X
SystemVu™ DDC Communicating Controller[d]	X	
Smoke Detector (supply and/or return air)	X	X
Horn Strobe Annunciator[e]		X
Time Guard II Compressor Delay Control Circuit		X
Phase Monitor	X	X
Condensate Overflow Switch	X	X
ECONOMIZERS AND OUTDOOR AIR DAMPERS		
EconomizerONE for Electromechanical Controls, complies with FDD (Standard and Ultra Low Leak damper models)[b,f]	X	X
Wi-Fi Stick for EconomizerONE (optional)		X
EconoMi$er® 2 for DDC controls (Standard and Ultra Low Leak air damper models)[b,d]	X	X
Motorized Two-Position Outdoor-Air Damper		X
Manual Outdoor-Air Damper (25% and 50%)		X
Barometric Relief[g]	X	X
Power Exhaust — Prop Design		X

ITEM	FACTORY-INSTALLED OPTION	FIELD-INSTALLED ACCESSORY
ECONOMIZER SENSORS AND IAQ DEVICES		
Single Dry Bulb Temperature Sensors[h]	X	X
Differential Dry Bulb Temperature Sensors[h]		X
Single Enthalpy Sensors[h]	X	X
Differential Enthalpy Sensors[h]		X
CO_2 Sensor (wall, duct, or unit mounted)[h]	X	X
INDOOR MOTOR AND DRIVE		
Multiple Motor and Drive Packages	X	
Fan Filter Status Switch	X	X
LOW AMBIENT CONTROL		
Winter Start Kit[i,j]		X
Low Ambient Controller to –20°F (–29°C)[i]		X
POWER OPTIONS		
Convenience Outlet (powered)[b]	X	
Convenience Outlet (unpowered)	X	X
Non-Fused Disconnect[k,l]	X	
High SCCR Protection[m]	X	
ROOF CURBS		
Roof Curb 14 in. (356 mm)		X
Roof Curb 24 in. (610 mm)		X

NOTE(S):

a. Not available for 48FE Ultra Low NOx units.
b. Not available as a factory-installed option on single phase (-3 voltage code) models. Use field-installed accessory where available.
c. Cu/Cu coils are only available with louvered hail guards.
d. Models with SystemVu controls comply with California Title 24 Fault Detection and Diagnostic (FDD).
e. Requires a field-supplied 24-v transformer for each application. See price pages for details.
f. FDD (Fault Detection and Diagnostic) capability per California Title 24 section 120.2.
g. Included with economizer.
h. Sensors used to optimize economizer performance.
i. See application data for assistance.
j. Not necessary on SystemVu units, as they are capable of operating at temperatures down to 25°F (4°C).
k. Non-fused disconnect switch cannot be used when unit electrical rating exceeds:
208/230-1-60 and 208/230-3-60 = 80 amps (FLA).
480-3-60 and 575-3-60 = 80 amps (FLA).
Carrier RTUBuilder automatically selects the amp limitations.
l. Not available for 48FE Ultra Low NOx 460-v units.
m. High SCCR (Short Circuit Current Rating) is not available on the following: units with Humidi-MiZer system, low ambient controls, phase loss monitor, non-fused disconnect, powered convenience outlet, or 575-v models.

Factory-installed options

Economizer (dry-bulb or enthalpy)

Economizers save money. They bring in fresh, outside air for ventilation and provide outside air to cool your building. This is the preferred method of low-ambient cooling. When used with CO_2 sensors, economizers can provide even more savings by adjusting the ventilation air intake to just the correct amount.

Economizers are available, installed and tested by the factory, with either enthalpy or dry-bulb temperature inputs. Additional sensors are available as accessories to optimize the economizers.

Economizers include a powered exhaust system and gravity-controlled barometric relief to help equalize building pressures. Gravity-controlled barometric relief also helps equalize ambient air pressures. This can be a cost effective solution to prevent building pressurization. Economizers are available in ultra low leak and standard low leak versions. They can be factory-installed or easily field installed.

Unit-mounted CO_2 sensor

The CO_2 sensor works with the economizer to intake only the correct amount of outside air for ventilation. As occupants fill your building, the CO_2 sensor detects their presence through increasing CO_2 levels and opens the economizer appropriately. When the occupants leave, the CO_2 levels decrease, and the sensor appropriately closes the economizer. This intelligent control of the ventilation air, called demand controlled ventilation (DCV), reduces the overall load on the rooftop, saving money. It is also available as a field-installed accessory.

Smoke detector (supply and/or return air)

Our smoke detectors make your application safer and your job easier. Carrier smoke detectors immediately shut down the rooftop unit when smoke is detected. They are available, installed by the factory, for supply air, return air, or both.

Optional Humidi-MiZer® adaptive dehumidification system

Carrier's Humidi-MiZer adaptive dehumidification system is an all-inclusive factory-installed option that can be ordered with any WeatherMaker® 48/50FE 04-07 rooftop unit, with the exception of single phase voltage (208/230-1-60) units.

This system expands the envelope of operation of Carrier's WeatherMaker rooftop units to provide unprecedented flexibility to meet year-round comfort conditions.

The Humidi-MiZer adaptive dehumidification system has a unique dual operational mode setting. It provides greater dehumidification of the occupied space through 2 modes of dehumidification operations, in addition to its normal design cooling mode.

When coupled with the Humidi-MiZer system, the 48/50FE 04-07 rooftop is capable of operating in normal design cooling mode, sub-cooling mode, and hot gas reheat mode. Normal design cooling mode is when the unit operates under its normal sequence of operation by cycling compressors to maintain comfort conditions.

Sub-cooling mode operates to satisfy part load type conditions when the space requires combined sensible and a higher proportion of latent load control. Hot gas reheat mode operates when outdoor temperatures fall and latent capacity is required for humidity control. Hot gas reheat mode provides neutral air for maximum dehumidification operation.

NOTE: Humidi-MiZer system includes Low Ambient controller.

Thru-the-base connections

Thru-the-base connections, available as a factory option, are necessary to ensure proper connection and seal when routing wire and piping through the rooftop's basepan and curb. These couplings eliminate roof penetration and should be considered for gas lines, main power lines, and control power.

Hinged access panels

These specially designed hinged access panels allow access to the unit's major components. Panels allow access to filters, the control box, and the indoor fan motor.

MERV-13 return air filters

This factory option upgrades the return air filters from standard unit filters to high efficiency 4 in. MERV-13 filters. Uses non-woven MERV-13 filter media with a high strength, moisture-resistant frame. Filter media is securely fastened inside the filter frame on all 4 sides.

Cu/Cu (indoor and outdoor) coils

Copper fins and copper tubes are mechanically bonded to copper tubes and copper tube sheets. A polymer strip prevents the coil assembly from contacting the sheet metal coil pan to minimize the potential for galvanic corrosion between coil and pan. Only available with louvered hail guards.

E-coated (outdoor and indoor) coils

These coils feature a flexible epoxy polymer coating uniformly applied to all coil surface areas without material bridging between fins. The coating process ensures complete coil encapsulation of tubes, fins, and headers.

Pre-coated outdoor coils

These coils feature a durable epoxy-phenolic coating that provides protection in mildly corrosive coastal environments. The coating minimizes galvanic action between dissimilar metals. The coating is applied to the aluminum fin stock prior to the fin stamping process to create an inert barrier between the aluminum fin and copper tube.

Condenser coil hail guard

These sleek, louvered panels protect the condenser coil from hail damage, foreign objects, and incidental contact. This can be purchased as a factory-installed option or as a field-installed accessory.

Single enthalpy sensor

This sensor allows the economizer to account for both the humidity and temperature of outside air conditions, providing additional comfort.

Stainless steel heat exchanger (48FE units only)

For this option, the tubular heat exchanger is made out of a minimum 20 gauge type 409 stainless steel for applications where the mixed air going to the heat exchanger is expected to drop below 45°F (7°C). Stainless steel may be specified on applications where the presence of airborne contaminants require its use (applications such as paper mills) or in areas with very high outdoor humidity that may result in severe condensation in the heat exchanger during cooling operation.

Convenience outlet (powered or unpowered)

Reduce service and/or installation costs by including a convenience outlet in your specification. Carrier will install this service feature at our factory. It provides a convenient, 15 amp, 115-v GFCI receptacle with "Wet in Use" cover. The "powered" option allows the installer to power the outlet from the line side of the disconnect or load side as required by code.

The "unpowered" option is to be powered from a separate 115/120-v power source. This outlet is available as a 15 amp factory-installed option or a 20 amp field-installed accessory.

Non-fused disconnect

This OSHA-compliant, factory-installed safety switch allows a service technician to locally secure power to the rooftop. When selecting a factory-installed non-fused disconnect, note that they are sized for the unit as ordered from the factory. The sizing does not accommodate field-installed items such as power exhaust devices, etc. If field installing electric heat with factory-installed non-fused disconnect switch, a single point kit may or may not be required.

NOTE: Not available for 48FE Ultra Low NOx 460-v units.

SystemVu™ controller

Carrier's SystemVu controller is an optional factory-installed and tested controller.

This option provides a whole new approach by using an intuitive, intelligent controller that not only monitors and controls the unit but also provides linkage to multiple building automation systems.

Each SystemVu controller makes it easy to set up, service, troubleshoot, access historical data, generate reports, and provide comfort only Carrier is noted for.

Key features include:

- Easy-to-read backlit 4-line text screen for superior visibility
- Quick operational condition LEDs for Run, Alert, and Fault
- Simple navigation using large keypad buttons for Navigation arrows, Test, Back, Enter, and Menu
- Capable of being controlled with a conventional thermostat, space sensor, or building automation system
- Service capabilities include:
  Auto run test
  Manual run test
  Component run hours and starts
  Commissioning reports
  Data logging
- Full range of diagnosis:
  Read refrigerant pressures without needing gauges
  Sensor faults
  Compressor reverse rotation
  Economizer diagnostics that meet California Title 24 requirements
- Quick data transfer via USB port:
  Unit configuration uploading/downloading
  Data logging
  Software upgrades
- Built in capacity for:
  i-Vu® open systems
  BACnet® systems
  CCN systems
- Configuration and alarm point capability:
  Contain over 100 alarm codes
  Contain over 260 status, troubleshooting, diagnostic, and maintenance points
  Contain over 270 control configuration setpoints

Condensate overflow switch

This sensor and related controller monitor the condensate level in the drain pan and shut down compression operation when overflow conditions occur. This option:

- Includes an indicator light showing when the sensor is disconnected (blinking red) and when there has been more than 10 seconds of water contact (solid red — compressors disabled)
- Includes a 10-second delay to break, which eliminates nuisance trips from splashing or waves in the pan (sensor needs 10 seconds of constant water contact before tripping)
- Disables the compressor(s) operation when a condensate plug is detected but still allows fans to run for the economizer

Fan filter status switch and maintenance indicator

When the optional factory-installed filter maintenance indicator is used, a factory-installed differential pressure switch measures pressure drop across the outside air filter and activates a field-supplied dry contact indicator when the pressure differential exceeds the adjustable switch setpoint.

High Short Circuit Current Rating (SCCR) protection

This factory-installed option provides high short circuit current protection of 10 kA against high potential fault current situations for the compressor and all indoor and outdoor fan motors. (A standard unit comes with 5 kA rating.)

This option is not available on 575 volt models or models with a factory-installed non-fused disconnect, Humidi-MiZer system, phase loss monitor/protection, powered convenience outlet, or low ambient controls.

Field-installed accessories

Condenser coil hail guard

These sleek, louvered panels protect the condenser coil from hail damage, foreign objects, and incidental contact. This can be purchased as a factory-installed option or as a field-installed accessory.

Differential enthalpy sensor

The differential enthalpy sensor is comprised of an outdoor and a return air enthalpy sensor to provide differential enthalpy control. The sensor allows the unit to determine whether outside air is suitable for free cooling.

Wall or duct-mounted CO_2 sensor

The IAQ sensor shall be available for duct or wall mount. The sensor provides demand ventilation indoor air quality (IAQ) control.

Propane conversion kit (48FE units only)

Convert your gas heat rooftop from standard natural gas operation to propane using this field-installed kit.

NOTE: Not available for 48FE Ultra Low NOx units.

High altitude conversion kit (48FE units only)

High altitudes have less oxygen, which affects the fuel/air mixture in heat exchangers. In order to maintain a proper fuel/air mixture, heat exchangers operating in altitudes above 2000 ft (610 m) require different orifices. To select the correct burner orifices or determine the heat capacity for a high altitude application, use either the selection software or the unit's service manual. High altitudes have less oxygen, which means heat exchangers need less fuel. The new gas orifices in this field-installed kit make the necessary adjustment for high altitude applications. They restore the optimal fuel to air mixture and maintain healthy combustion at altitudes above 2000 ft (610 m).

NOTE: Typical natural gas heating value ranges from 975 to 1050 Btu/ft^3 at sea level nationally. The heating value goes down approximately 1.7% per every thousand feet of elevation. Standard factory orifices can typically be used up to 2000 ft (610 m) elevations without any operational issues.

NOTE: Not available for 48FE Ultra Low NOx units.

Flue discharge deflector (48FE units only)

The flue discharge deflector is a useful accessory when flue gas recirculation is a concern. By venting the flue discharge upwards, the deflector minimizes the chance for a neighboring unit to intake the flue exhaust.

MERV-8 and MERV-13 return air filters

These field-installed accessories provide a return air filter upgrade from standard unit filters to high efficiency MERV-8 or 2 in. MERV-13 filters. Uses non-woven filter media with high strength, moisture-resistant frame. Filter media is securely fastened inside the filter frame on all 4 sides.

Phase monitor protection

The phase monitor control monitors the sequence of the 3-phase electrical system to provide phase reversal protection and monitors the 3-phase voltage inputs to provide phase loss protection for the 3-phase device. It will work on either a Delta or Wye power connection.

Winter start kit

Carrier's winter start kit extends the low ambient limit of your rooftop to 25°F (–4°C). The kit bypasses the low pressure switch, preventing nuisance tripping of the switch. Other low ambient precautions may still be prudent.

Low ambient controller

The low ambient controller is a head pressure controller kit designed to maintain the unit's condenser head pressure during periods of low ambient cooling operation. This device should be used as an alternative to economizer free cooling when economizer usage is either not appropriate or not desired. The low ambient controller will either cycle the outdoor fan motors or operate them at reduced speed to maintain the unit operation, depending on the model. This controller allows cooling operation down to –20°F (–29°C) ambient conditions.

Roof curb (14 in./356 mm or 24 in./610 mm)

This full perimeter roof curb with exhaust capability provides separate air streams for energy recovery from the exhaust air without supply air contamination.

Fan filter status switch and maintenance indicator

When a field-installed filter maintenance indicator is used, a field-installed differential pressure switch measures pressure drop across the outside air filter and activates a field-supplied dry contact indicator when the pressure differential exceeds the adjustable switch setpoint.

Power exhaust

This accessory provides superior internal building pressure control and may eliminate the need for costly external pressure control fans.

Manual OA damper

Manual outdoor air dampers are an economical way to bring in ventilation air. The dampers are available in 25% and 50% versions.

NOTE: See application tip "ROOFTOP-18-01" prior to use of this damper on 07 size models.

Motorized two-position damper

The Carrier two-position, motorized outdoor air damper admits up to 100% outside air. Using reliable, gear-driven technology, the two-position damper opens to allow ventilation air and closes when the rooftop stops, stopping unwanted infiltration.

NOTE: See application tip "ROOFTOP-18-01" prior to use of this damper on 07 size models.

Electric heaters (50FE units only)

Carrier offers a full-line of field-installed accessory heaters. The heaters are very easy to use and install, and they are all pre-engineered and certified.

Time Guard II control circuit

This accessory protects your compressor by preventing short-cycling in the event of some other failure by preventing the compressor from restarting for 30 seconds after stopping. (Not required with SystemVu™ controller or authorized commercial thermostats.)

Wi-Fi Stick for EconomizerONE (optional)

The accessory Wi-Fi/WLAN stick can be connected to the EconomizerONE POL224 economizer controller via the USB host interface. The Wi-Fi stick enables a wireless connection to be made between a smartphone and the economizer controller via the Climatix™[1] mobile application for commissioning, troubleshooting, and maintenance operations. The Wi-Fi stick is required to utilize the mobile application.

1. Third-party trademarks and logos are the property of their respective owners.

Climatix™ mobile application

The Climatix™ mobile application offers a best-in-class user interface and a simple step-by-step commissioning workflow using a mobile device. The user interface walks users through the setup of the controller and allows users to view the operating mode and parameters. Users can adjust setpoints, initiate damper tests, and save the final configuration as a favorite to expedite setup in the future.

The application is available on Android™[1] and Apple iOS®[1] platforms. The Wi-Fi stick for the EconomizerONE is required to join the Siemens-WiFi-Stick network and setup the controller on a smartphone.

Options and Accessory Weights

OPTION / ACCESSORY NAME	48/50FE UNIT WEIGHT[a]							
	04		05		06		07	
	lb	kg	lb	kg	lb	kg	lb	kg
Humidi-MiZer® System[b]	15	7	15	7	15	7	24	11
Power Exhaust — Vertical or Horizontal	45	21	45	21	45	21	45	21
EconomizerONE or EconoMi$er® 2	51	23	51	23	51	23	51	23
Two-Position Damper	39	18	39	18	39	18	58	26
Manual Damper	12	5	12	5	12	5	18	8
Medium Gas Heat (48FE units only)[c]	9	4	9	4	9	4	15	7
High Gas Heat (48FE units only)[c]	—	—	63	29	63	29	63	29
Hail Guard (louvered)	13	6	13	6	13	6	17	8
Cu/Cu Condenser Coil	37	17	74	34	74	34	95	43
Cu/Cu Evaporator Coil	38	17	38	17	38	17	70	32
Roof Curb (14 in. curb)	95	43	95	43	95	43	95	43
Roof Curb (24 in. curb)	150	68	150	68	150	68	150	68
CO_2 Sensor	2	1	2	1	2	1	2	1
Flue Discharge Deflector	7	3	7	3	7	3	7	3
Optional Indoor Motor/Drive	10	5	10	5	10	5	15	7
Low Ambient Controller	9	4	9	4	9	4	9	4
Winter Start Kit	5	2	5	2	5	2	5	2
Return Air Smoke Detector	7	3	7	3	7	3	7	3
Supply Air Smoke Detector	7	3	7	3	7	3	7	3
Fan Filter Switch	2	1	2	1	2	1	2	1
Non-Fused Disconnect	15	7	15	7	15	7	15	7
Powered Convenience Outlet[d]	36	16	36	16	36	16	36	16
Unpowered Convenience Outlet	4	2	4	2	4	2	4	2
Enthalpy Sensor	2	1	2	1	2	1	2	1
Differential Enthalpy Sensor	3	1	3	1	3	1	3	1

NOTE(S):

a. Where multiple variations are available, the heaviest combination is listed.
b. For Humidi-MiZer system, add low ambient controller weight.
c. Values do not apply for 48FE Ultra Low NOx units.
d. Weight includes convenience outlet and convenience outlet transformer.

48FE**04-07 Base Unit Dimensions

NOTES:

1. DIMENSIONS ARE IN INCHES, DIMENSIONS IN [ ] ARE IN MILLIMETERS.
2. CENTER OF GRAVITY
3. DIRECTION OF AIR FLOW
4. ALL VIEW DRAWN USING 3RD ANGLE

UNIT	J	K
48FE**04	33 3/8 [847]	18 5/8 [472]
48FE**05	33 3/8 [847]	14 7/8 [377]
48FE**06	33 3/8 [847]	14 7/8 [377]
48FE**07	41 3/8 [1051]	18 5/8 [472]

Carrier

THIS DOCUMENT IS THE PROPERTY OF CARRIER CORPORATION AND IS DELIVERED UPON THE EXPRESS CONDITION THAT THE CONTENTS WILL NOT BE DISCLOSED OR USED WITHOUT CARRIER CORPORATION'S WRITTEN CONSENT.

SUBMISSION OF THESE DRAWINGS OR DOCUMENTS DOES NOT CONSTITUTE PART PERFORMANCE OR ACCEPTANCE OF CONTRACT.

	CONNECTION SIZES
A	1 3/8" [35] DIA FIELD POWER SUPPLY HOLE
B	2" [50] DIA POWER SUPPLY KNOCKOUT
C	1 3/4" [51] DIA GAUGE ACCESS PLUG
D	7/8" [22] DIA FIELD CONTROL WIRING HOLE
E	3/4"-14 NPT CONDENSATE DRAIN
F	1/2"-14 NPT GAS CONNECTION
G	2 1/2 " [64] DIA POWER SUPPLY KNOCK-OUT

THRU-THE-BASE CHART
THESE HOLES REQUIRED FOR USE
CRBTMPWR008A00, 009A00

	THREADED CONDUIT SIZE	WIRE USE	REQ'D HOLE SIZES (MAX.)
W	1/2"	115V	7/8" [22.2]
X	1/2"	24V	7/8" [22.2]
Y	3/4"	POWER	1-1/8" [28.6]
Z*	(009A00) 1/2" FPT	GAS	1-1/8" [28.6]
	FOR "THRU-THE-BASEPAN" FACTORY OPTION, FITTINGS FOR ONLY X, Y, & Z ARE PROVIDED		
*	(008A00) PROVIDES 3/4" FPT THRU CURB FLANGE & FITTING.		

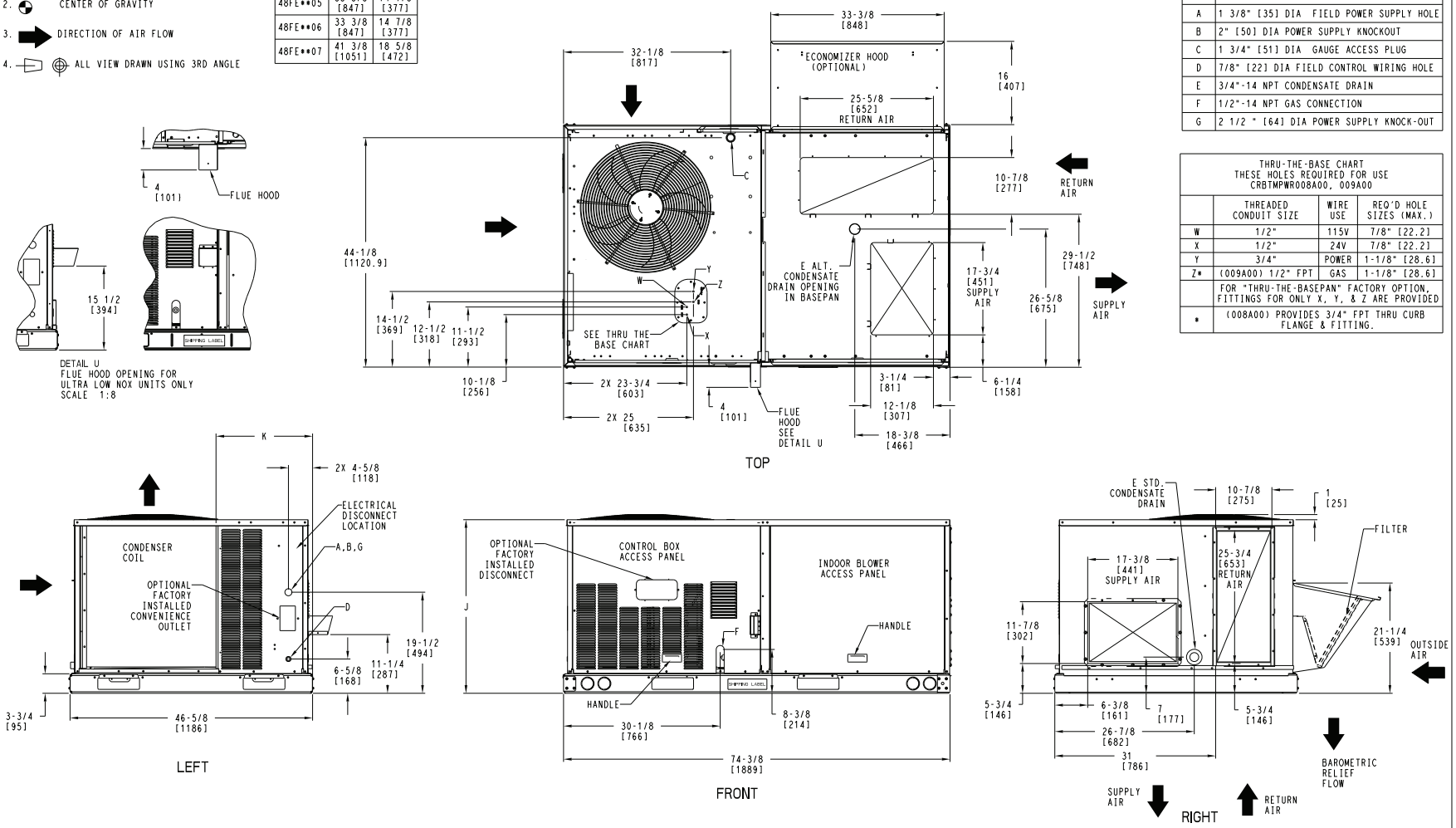

ITC CLASSIFICATION	SHEET	DATE	SUPERCEDES			REV
U.S. ECCN:NSR	1 OF 3	11/17/23	-	48FE 04-07 SINGLE PACKAGE ELECTRICAL COOLING WITH GAS HEAT	48TC006964	-

48FE**04-07 Base Unit Dimensions (cont)

Carrier | THIS DOCUMENT IS THE PROPERTY OF CARRIER CORPORATION AND IS DELIVERED UPON THE EXPRESS CONDITION THAT THE CONTENTS WILL NOT BE DISCLOSED OR USED WITHOUT CARRIER CORPORATION'S WRITTEN CONSENT. | SUBMISSION OF THESE DRAWINGS OR DOCUMENTS DOES NOT CONSTITUTE PART PERFORMANCE OR ACCEPTANCE OF CONTRACT.

UNIT	STD. UNIT WEIGHT *		CORNER WEIGHT (A)		CORNER WEIGHT (B)		CORNER WEIGHT (C)		CORNER WEIGHT (D)		C.G.		HEIGHT
	LBS.	KG.	LBS.	KG.	LBS.	KG.	LBS.	KG.	LBS.	KG.	X	Y	Z
48FE**04	482	219	113	51	116	53	128	58	125	57	37 5/8 [956]	24 9/16 [624]	18 1/4 [464]
48FE**05	543	246	138	63	133	60	133	60	138	63	36 1/2 [927]	23 3/8 [594]	18 [457]
48FE**06	556	252	142	64	136	62	136	62	142	64	36 1/2 [927]	23 3/8 [594]	18 [457]
48FE**07	607	275	162	73	152	69	141	64	151	68	36 [914]	22 1/2 [572]	19 3/8 [492]

* STANDARD UNIT WEIGHT IS WITH LOW GAS HEAT AND WITHOUT PACKAGING.
FOR OTHER OPTIONS AND ACCESSORIES, REFER TO THE PRODUCT DATA CATALOG.

THIS TABLE IS FOR "ULTRA LOW NOX" UNITS ONLY

UNIT	STD. UNIT WEIGHT**		CORNER WEIGHT (A)		CORNER WEIGHT (B)		CORNER WEIGHT (C)		CORNER WEIGHT (D)		C.G.		HEIGHT
	LBS.	KG.	LBS.	KG.	LBS.	KG.	LBS.	KG.	LBS.	KG.	X	Y	Z
48FEG*04	512	233	120	55	122	55	136	62	134	61	37 1/2 [953]	24 11/16 [627]	18 1/8 [460]
48FEG*05	573	260	146	66	139	63	141	64	147	67	36 3/8 [924]	23 1/2 [597]	18 [457]
48FEG*06	586	266	149	68	143	65	144	65	151	69	36 3/8 [924]	23 1/2 [597]	18 [457]

** STANDARD UNIT WEIGHT IS WITH WITHOUT PACKAGING.
FOR OTHER OPTIONS AND ACCESSORIES, REFER TO THE PRODUCT DATA CATALOG.

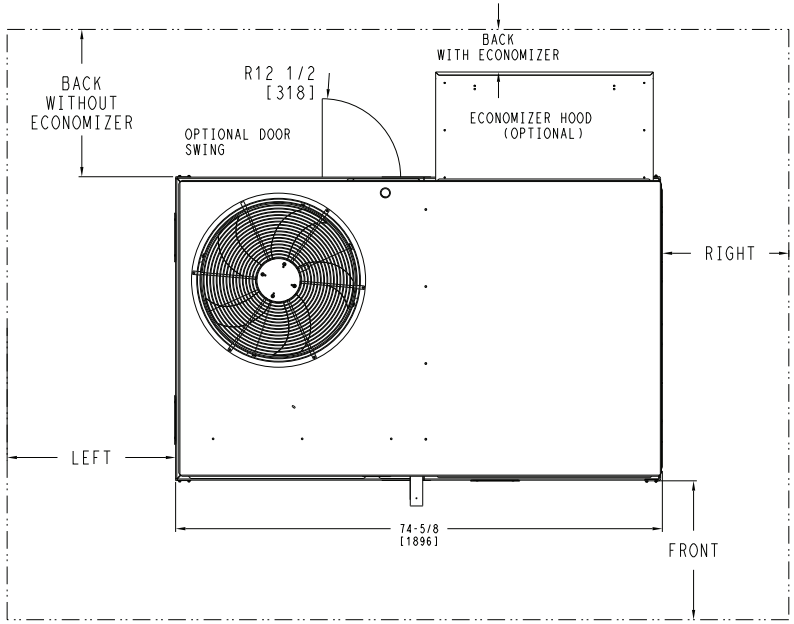

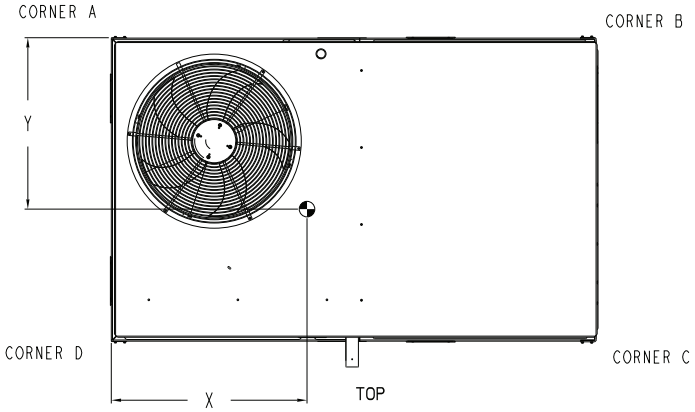

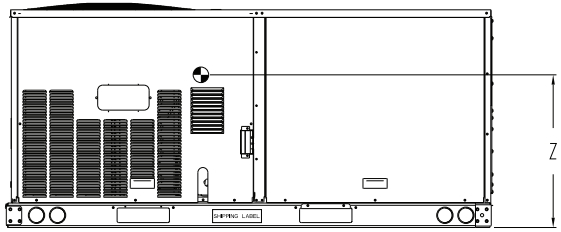

NOTES:

1. FOR ALL MINIMUM CLEARANCES LOCAL CODES OR JURISDICTIONS MAY PREVAIL.

CLEARANCE			
	SERVICE WITH:	SERVICE WITH:	OPERATING
SURFACE	CONDUCTIVE BARRIER	NONCONDUCTIVE BARRIER	CLEARANCE
FRONT	48 [1219mm]	36 [914mm]	18 [457mm]
LEFT	48 [1219mm]	42 [1067mm]	18 [457mm]
BACK W/O HOOD	48 [1219mm]	42 [1067mm]	18 [457mm]
BACK W/HOOD	36 [914mm]	36 [914mm]	18 [457mm]
RIGHT	36 [914mm]	36 [914mm]	18 [457mm]
TOP	72 [1829mm]	72 [1829mm]	72 [1829mm]

ITC CLASSIFICATION	SHEET	DATE	SUPERCEDES			REV
U.S. ECCN:NSR	2 OF 3	11/17/23	-	48FE 04-07 SINGLE PACKAGE ELECTRICAL COOLING WITH GAS HEAT	48TC006964	-

48FE**04-07 Base Unit Dimensions (cont)

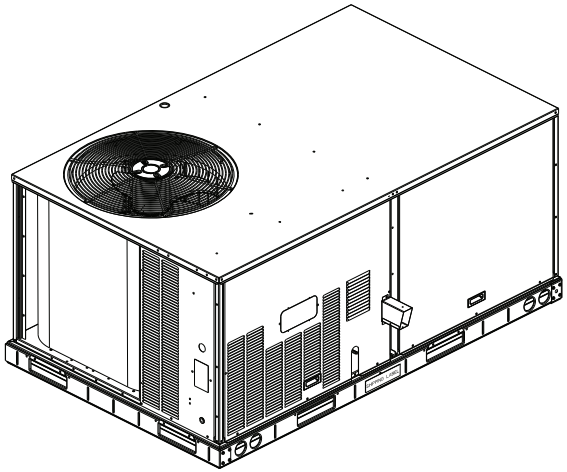

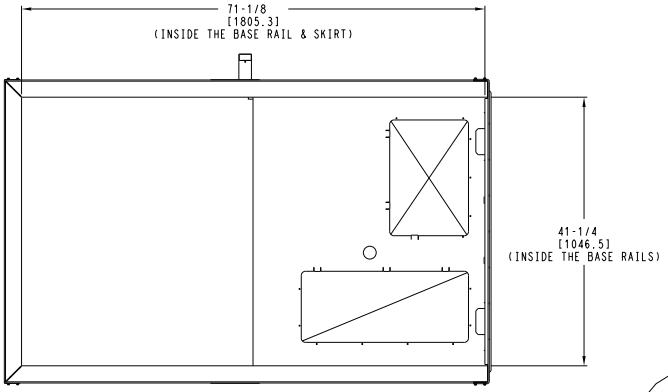

INSIDE BASERAIL DIMENSIONS

BOTTOM

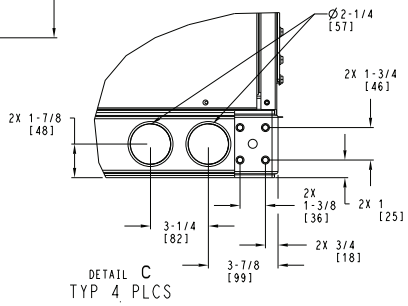

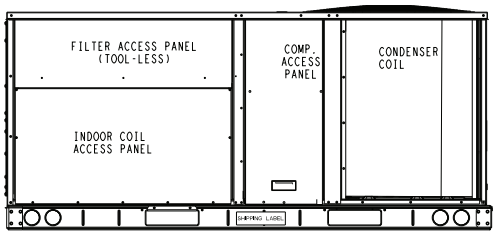

BACK

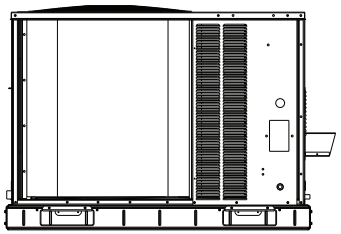

LEFT

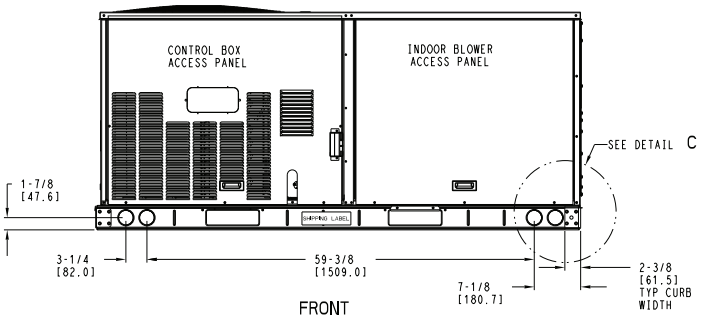

FRONT

ITC CLASSIFICATION	SHEET	DATE	SUPERCEDES			
U.S. ECCN:NSR	3 OF 3	11/17/23	-	48FE 04-07 SINGLE PACKAGE ELECTRICAL COOLING WITH GAS HEAT	48TC006964	REV -

THIS DOCUMENT IS THE PROPERTY OF CARRIER CORPORATION AND IS DELIVERED UPON THE EXPRESS CONDITION THAT THE CONTENTS WILL NOT BE DISCLOSED OR USED WITHOUT CARRIER CORPORATION'S WRITTEN CONSENT.

SUBMISSION OF THESE DRAWINGS OR DOCUMENTS DOES NOT CONSTITUTE PART PERFORMANCE OR ACCEPTANCE OF CONTRACT.

Base unit dimensions (cont)

50FE-*04-07 Base Unit Dimensions

NOTES:

1. DIMENSIONS ARE IN INCHES, DIMENSIONS IN [ ] ARE IN MILLIMETERS.
2. CENTER OF GRAVITY
3. DIRECTION OF AIR FLOW
4. ALL VIEW DRAWN USING 3RD ANGLE

UNIT	J	K
50FE**04	33 3/8 [847]	18 5/8 [472]
50FE**05	33 3/8 [847]	14 7/8 [377]
50FE**06	33 3/8 [847]	14 7/8 [377]
50FE**07	41 3/8 [1051]	18 5/8 [472]

Carrier THIS DOCUMENT IS THE PROPERTY OF CARRIER CORPORATION AND IS DELIVERED UPON THE EXPRESS CONDITION THAT THE CONTENTS WILL NOT BE DISCLOSED OR USED WITHOUT CARRIER CORPORATION'S WRITTEN CONSENT. SUBMISSION OF THESE DRAWINGS OR DOCUMENTS DOES NOT CONSTITUTE PART PERFORMANCE OR ACCEPTANCE OF CONTRACT.

	CONNECTION SIZES
A	1 3/8" [35] DIA FIELD POWER SUPPLY HOLE
B	2" [51] DIA POWER SUPPLY KNOCKOUT
C	1 3/4" [44] DIA GAUGE ACCESS PLUG
D	7/8" [22] DIA FIELD CONTROL WIRING HOLE
E	3/4"-14 NPT CONDENSATE DRAIN
G	2 1/2 " [64] DIA POWER SUPPLY KNOCK-OUT

THRU-THE-BASE CHART
THESE HOLES REQUIRED FOR USE
CRBTMPWR008A00, 009A00

	THREADED CONDUIT SIZE	WIRE USE	REQ'D HOLE SIZES (MAX.)
W	1/2"	115V	7/8" [22.2]
X	1/2"	24V	7/8" [22.2]
Y *	3/4"	POWER	1 1/8" [28.6]
Z**	(009A00) 1/2" FPT	GAS	1 1/8" [28.6]
	FOR "THRU-THE-BASEPAN" FACTORY OPTION, FITTINGS FOR ONLY X,Y, & Z ARE PROVIDED		
*	SELECT EITHER 3/4" OR 1/2" FOR POWER, DEPENDING ON WIRE SIZE		
**	(008A00) PROVIDES 3/4" FPT THRU CURB FLANGE & FITTING.		

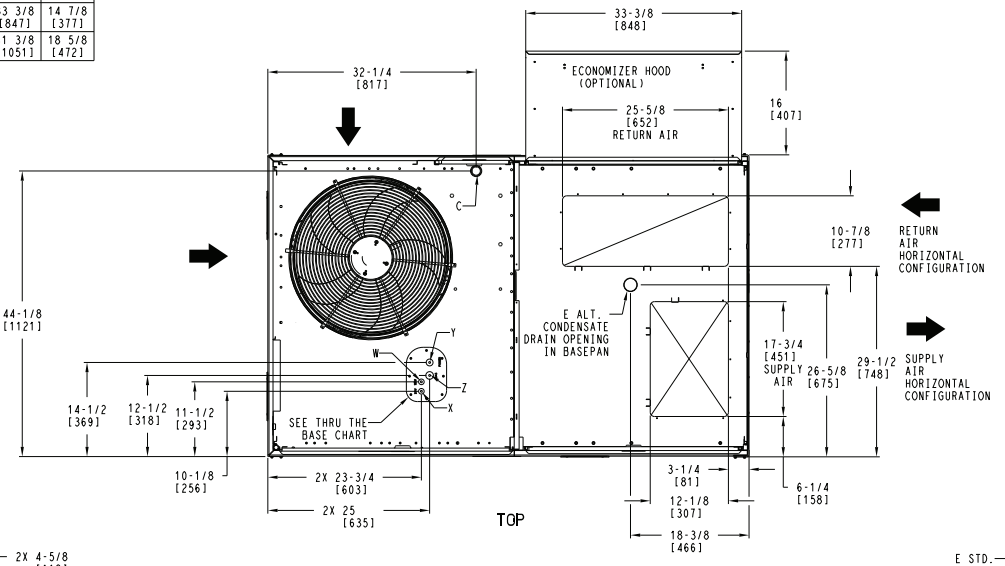

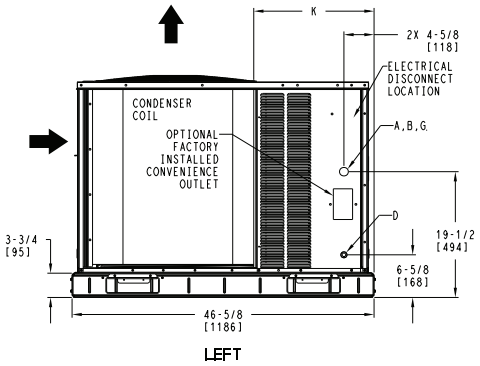

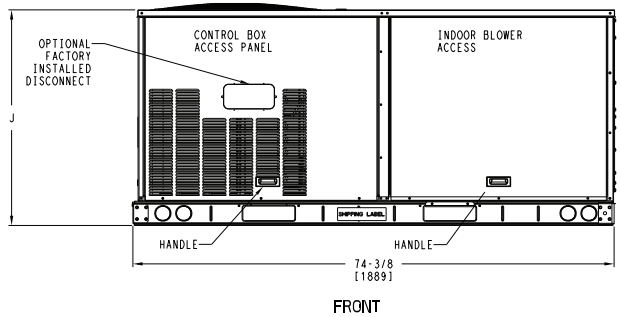

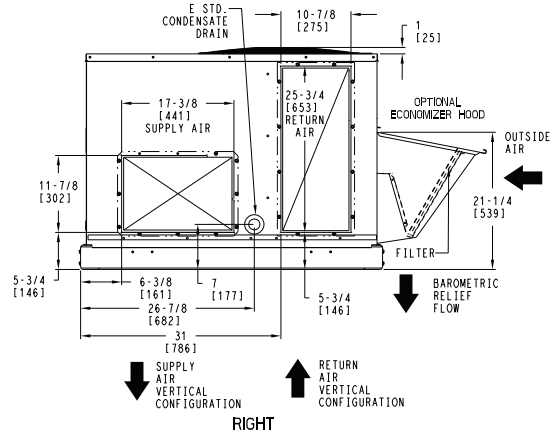

ITC CLASSIFICATION	SHEET	DATE	SUPERCEDES			REV
U.S. ECCN:NSR	1 OF 3	11/20/23	-	50FE 04-07 SINGLE PACKAGE ELECTRICAL COOLING WITH ELECTRIC HEAT	48TC006965	-

50FE-*04-07 Base Unit Dimensions (cont)

UNIT	STD. UNIT WEIGHT*		CORNER WEIGHT (A)		CORNER WEIGHT (B)		CORNER WEIGHT (C)		CORNER WEIGHT (D)		C.G.		HEIGHT
	LBS.	KG.	LBS.	KG.	LBS.	KG.	LBS.	KG.	LBS.	KG.	X	Y	Z
50FE**04	437	198	110	50	107	49	108	49	112	51	36 5/8 [930]	23 9/16 [598]	18 1/2 [470]
50FE**05	498	226	136	62	124	56	114	52	125	57	35 1/2 [902]	22 3/8 [568]	18 1/4 [464]
50FE**06	511	232	139	63	127	58	117	53	128	58	35 1/2 [902]	22 3/8 [568]	18 1/4 [464]
50FE**07	562	255	154	70	137	62	127	58	143	65	35 [889]	22 1/2 [572]	19 1/2 [495]

* STANDARD UNIT WEIGHT IS WITHOUT ELECTRIC HEAT AND WITHOUT PACKAGING.
FOR OTHER OPTIONS AND ACCESSORIES, REFER TO THE PRODUCT DATA CATALOG.

Carrier
THIS DOCUMENT IS THE PROPERTY OF CARRIER CORPORATION AND IS DELIVERED UPON THE EXPRESS CONDITION THAT THE CONTENTS WILL NOT BE DISCLOSED OR USED WITHOUT CARRIER CORPORATION'S WRITTEN CONSENT.
SUBMISSION OF THESE DRAWINGS OR DOCUMENTS DOES NOT CONSTITUTE PART PERFORMANCE OR ACCEPTANCE OF CONTRACT.

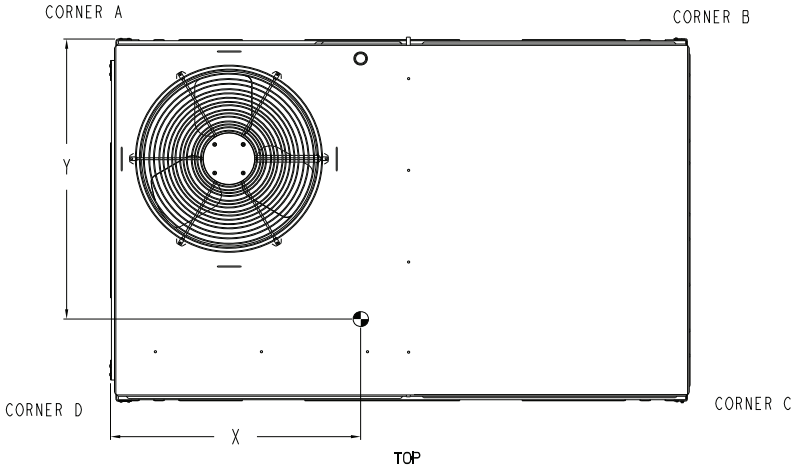

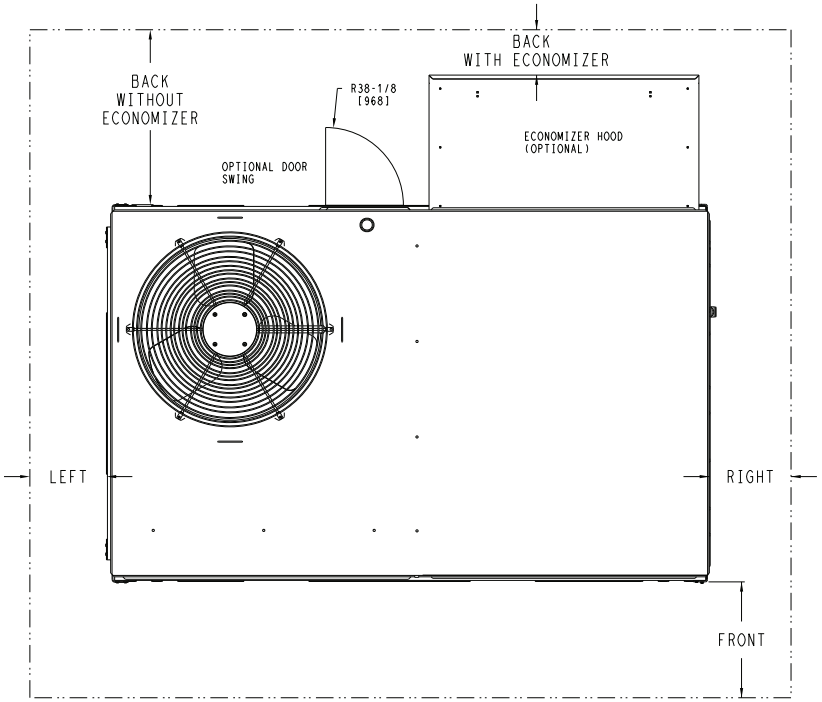

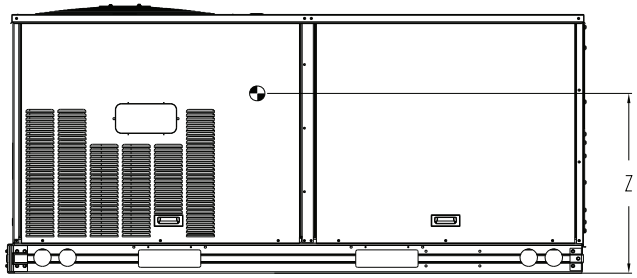

NOTE:

1. FOR ALL MINIMUM CLEARANCES LOCAL CODES OR JURISDICTIONS MAY PREVAIL.

CLEARANCE			
	SERVICE WITH:	SERVICE WITH:	OPERATING
SURFACE	CONDUCTIVE BARRIER	NONCONDUCTIVE BARRIER	CLEARANCE
FRONT	48 [1219mm]	36 [914mm]	18 [457mm]
LEFT	48 [1219mm]	42 [1067mm]	18 [457mm]
BACK W/O HOOD	48 [1219mm]	42 [1067mm]	18 [457mm]
BACK W/ HOOD	36 [914mm]	36 [914mm]	18 [457mm]
RIGHT	36 [914mm]	36 [914mm]	18 [457mm]
TOP	72 [1829mm]	72 [1829mm]	72 [1829mm]

ITC CLASSIFICATION	SHEET	DATE	SUPERCEDES			REV
U.S. ECCN:NSR	2 OF 3	11/20/23	-	50FE 04-07 SINGLE PACKAGE ELECTRICAL COOLING WITH ELECTRIC HEAT	48TC006965	-

50FE-*04-07 Base Unit Dimensions (cont)

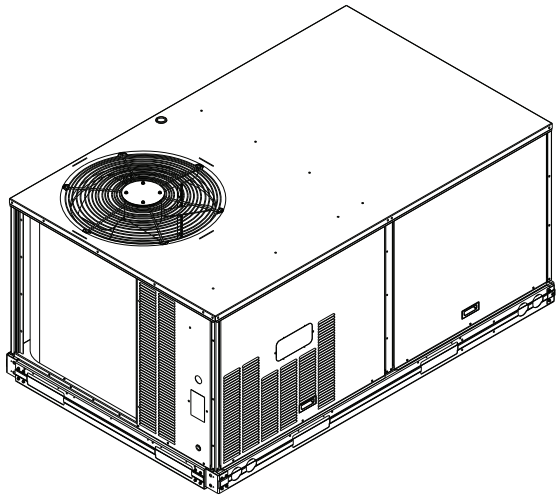

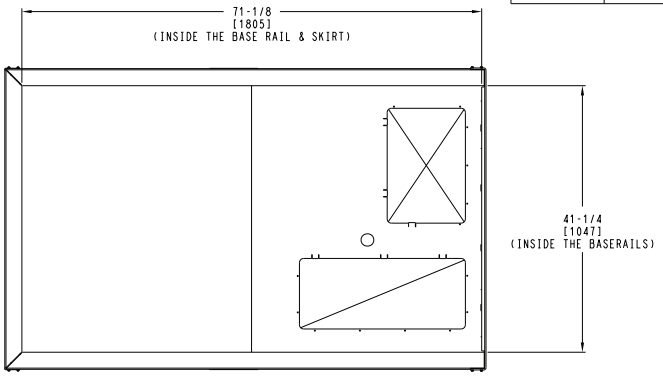

INSIDE BASERAIL DIMENSIONS

BOTTOM

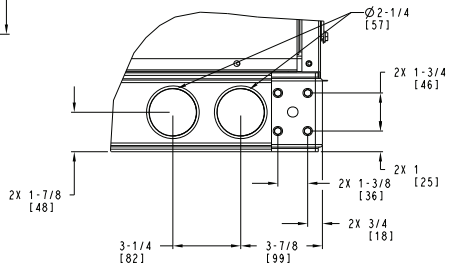

DETAIL C
TYP 4 PLCS

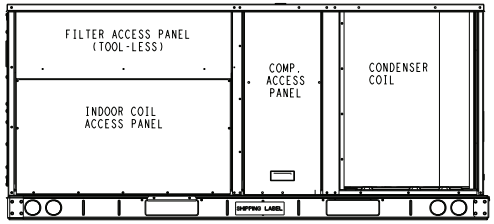

BACK

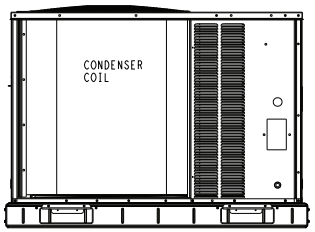

LEFT

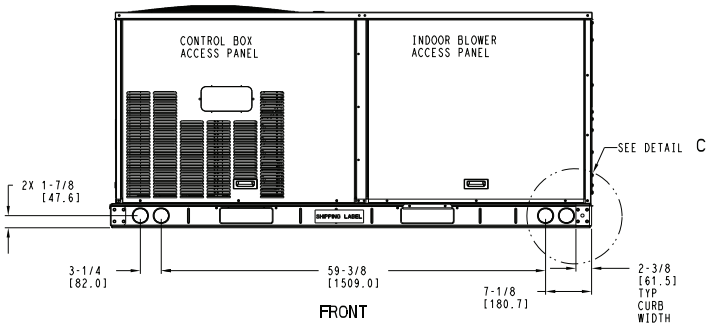

FRONT

ITC CLASSIFICATION	SHEET	DATE	SUPERCEDES			REV
U.S. ECCN:NSR	3 OF 3	11/20/23	-	50FE 04-07 SINGLE PACKAGE ELECTRICAL COOLING WITH ELECTRIC HEAT	48TC006965	-

Roof Curb Dimensions — 48/50FE 04-07

ROOF CURB ACCESSORY #	A
CRRFCURB001A01	14" [356]
CRRFCURB002A01	24" [610]

NOTES:
1. ROOFCURB ACCESSORY IS SHIPPED DISASSEMBLED.
2. INSULATED PANELS: 25.4 [1"] THK. POLYURETHANE FOAM, 44.5 [1-3/4] # DENSITY.
3. DIMENSIONS IN [ ] ARE IN MILLIMETERS.
4. ROOFCURB: 18 GAGE STEEL.
5. ATTACH DUCTWORK TO CURB. (FLANGES OF DUCT REST ON CURB).
6. SERVICE CLEARANCE 4 FEET ON EACH SIDE.
7. ▨ DIRECTION OF AIR FLOW.
8. CONNECTOR PACKAGE CRBTMPWR001A01 IS FOR THRU-THE-CURB GAS TYPE
   PACKAGE CRBTMPWR003A01 IS FOR THRU-THE-BOTTOM TYPE GAS CONNECTIONS.

CONNECTOR PKG. ACC.	GAS CONNECTION TYPE	GAS FITTING	POWER WIRING FITTING	CONTROL WIRING FITTING	ACCESSORY CONVENIENCE OUTLET WIRING CONNECTOR
CRBTMPWR001A01	THRU THE CURB	3/4" [19] NPT	3/4" [19] NPT	1/2" [12.7] NPT	1/2" [12.7] NPT
CRBTMPWR003A01	THRU THE BOTTOM	1/2" [12.7] NPT			

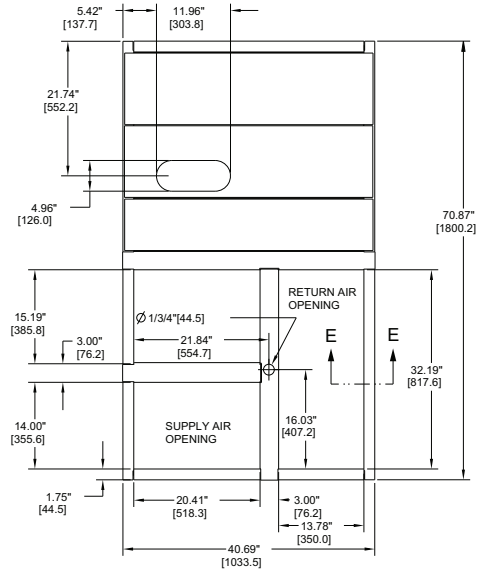

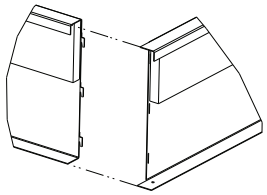

VIEW "B"
CORNER DETAIL

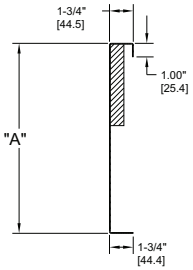

SECTION E-E
SCALE 0.250

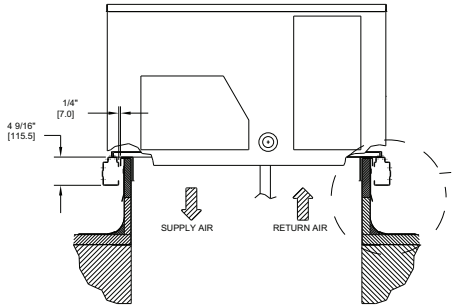

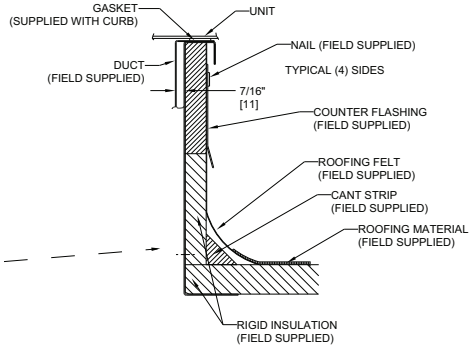

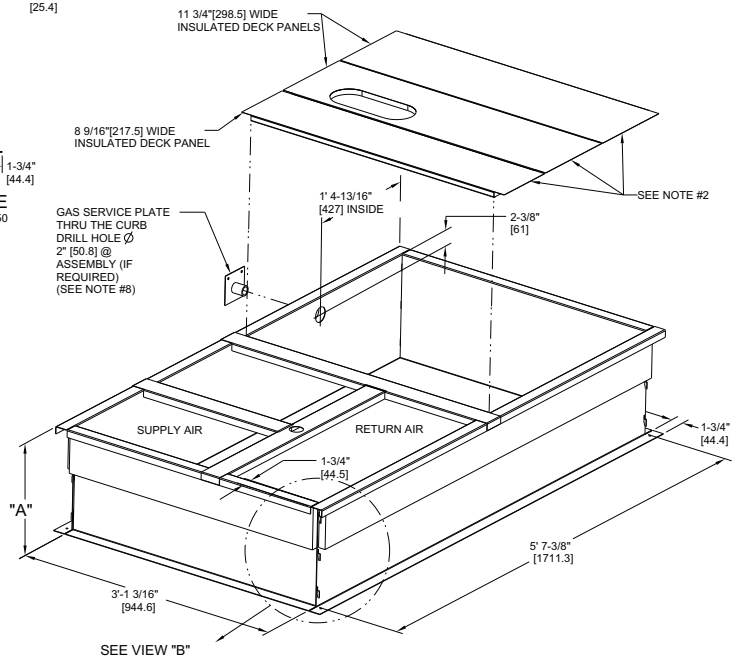

CERTIFIED DRAWING

REV	REVISION RECORD	DATE	BY	CHK'D	APP'D	ECN NO.
A	OVERALL DIM. 5'-7 3/8" WAS 5'-7 7/8; 18GA MATERIAL WA 16 GA.; NAIL FIELD SUPPLIED WAS WITH CURB	04/22/13	MMC	-	-	1067898

DRAWING RELEASE LEVEL: PRODUCTION			
THIRD ANGLE PROJECTION	UNLESS OTHERWISE SPECIFIED DIMENSIONS ARE IN INCHES TOLERANCES ON: 1 DEC ± - 2 DEC ± - 3 DEC ± - ANG ± -		
MATERIAL - - -	AUTHORIZATION NUMBER 1041738	TITLE CURB ASY, ROOF	
ENGINEERING REQUIREMENTS T-005, Y-002	ENGINEERING - - MANUFACTURING - -	SIZE D	DRAWING NUMBER 48TC400427 SHEET 5 OF 5 / REV B
WEIGHT: -	DRAFTER MMC 06/17/11 CHECKER - -		
SURFACE FINISH - / MFG/PURCH PURCH	MODEL (INTERNAL USE ONLY)	NEXT DRAWING - / SCALE N/A	DISTRIBUTION MMC

48/50FE*A04 Single Stage Cooling Capacities[a,b]

48/50FE*A04				AMBIENT TEMPERATURE (°F)											
				85			95			105			115		
				EA (db)			EA (db)			EA (db)			EA (db)		
				75	80	85	75	80	85	75	80	85	75	80	85
900 cfm	EA (wb)	58	TC	30.4	30.4	32.0	27.8	27.8	31.7	25.8	25.8	29.4	23.5	23.5	26.9
			SHC	24.9	28.4	32.0	24.0.	27.8	31.7	22.2	25.8	29.4	20.1	23.5	26.9
		62	TC	32.4	32.4	32.4	29.8	29.8	30.4	26.9	26.9	28.8	24.1	24.1	27.1
			SHC	23.3	27.5	31.8	21.8	26.1	30.4	20.3	24.5	28.8	18.7	22.9	27.1
		67	TC	36.1	36.1	36.1	34.0	34.0	34.0	31.2	31.2	31.2	28.1	28.1	28.1
			SHC	19.0	23.0	27.0	18.0.	22.1	26.3	16.5	20.7	24.9	15.0	19.3	23.5
		72	TC	39.5	39.5	39.5	37.8	37.8	37.8	35.4	35.4	35.4	32.7	32.7	32.7
			SHC	15.0	18.6	22.2	14.0	17.8	21.6	12.7	16.6	20.5	11.4	15.4	19.4
		76	TC	—	41.6	41.6	—	40.5	40.5	—	38.5	38.5	—	35.8	35.8
			SHC	—	15.1	20.0	—	14.3	19.3	—	13.1	18.0	—	11.9	16.9
1050 cfm	EA (wb)	58	TC	31.9	31.9	36.1	29.8	29.8	33.9	27.6	27.6	31.5	25.3	25.3	28.9
			SHC	27.6	31.9	36.1	25.8	29.8	33.9	23.8	27.6	31.5	21.7	25.3	28.9
		62	TC	33.6	33.6	34.9	31.0	31.0	33.5	28.2	28.2	31.8	25.3	25.3	30.1
			SHC	25.1	30.0	34.9	23.7	28.6	33.5	22.1	27.0	31.8	20.5	25.3	30.1
		67	TC	37.3	37.3	37.3	35.1	35.1	35.1	32.5	32.5	32.5	29.2	29.2	29.2
			SHC	20.1	24.7	29.2	19.1	23.9	28.6	17.9	22.8	27.7	16.3	21.2	26.1
		72	TC	40.4	40.4	40.4	38.8	38.8	38.8	36.4	36.4	36.4	33.7	33.7	33.7
			SHC	15.3	19.4	23.5	14.4	18.8	23.2	13.2	17.7	22.3	11.9	16.5	21.2
		76	TC	—	42.5	42.5	—	41.3	41.3	—	39.3	39.3	—	36.8	36.8
			SHC	—	15.4	21.2	—	14.8	20.5	—	13.8	19.6	—	12.6	16.6
1200 cfm	EA (wb)	58	TC	33.5	33.5	38.0	31.5	31.5	35.8	29.2	29.2	33.3	26.8	26.8	30.6
			SHC	29.1	33.5	38.0	27.3	31.5	35.8	25.2	29.2	33.3	23.0	26.8	30.6
		62	TC	34.6	34.6	37.7	32.2	32.2	36.3	29.4	29.4	33.6	26.9	26.9	31.0
			SHC	26.9	32.3	37.7	25.5	30.9	36.3	23.3	28.5	33.6	21.4	26.2	31.0
		67	TC	38.2	38.2	38.2	36.0	36.0	36.0	33.4	33.4	33.4	30.0	30.0	30.0
			SHC	21.1	26.2	31.2	20.2	25.5	30.8	19.1	24.6	30.2	17.5	23.1	28.6
		72	TC	40.9	40.9	40.9	39.6	39.6	39.6	37.3	37.3	37.3	34.5	34.5	34.5
			SHC	15.5	20.0	24.5	14.7	19.6	24.5	13.6	18.7	23.8	12.3	17.6	22.9
		76	TC	—	43.1	43.1	—	41.8	41.8	—	40.1	40.1	—	37.5	37.5
			SHC	—	15.6	22.2	—	15.1	19.3	—	14.3	19.0	—	13.2	18.0
1350 cfm	EA (wb)	58	TC	34.9	34.9	39.5	33.0	33.0	37.4	30.6	30.6	34.8	28.1	28.1	32.0
			SHC	30.3	34.9	39.5	28.6	33.0	37.4	26.4	30.6	34.8	24.2	28.1	32.0
		62	TC	35.4	35.4	39.7	33.4	33.4	38.2	31.2	31.2	34.6	28.1	28.1	33.3
			SHC	28.1	33.9	39.7	26.8	32.5	38.2	24.3	29.5	34.6	22.9	28.1	33.3
		67	TC	38.9	38.9	38.9	36.7	36.7	36.7	34.1	34.1	34.1	30.7	30.7	31.0
			SHC	21.9	27.4	33.0	21.2	27.0	32.8	20.2	26.3	32.3	18.7	24.9	31.0
		72	TC	41.5	41.5	41.5	40.2	40.2	40.2	38.0	38.0	38.0	35.1	35.1	35.1
			SHC	15.8	20.7	25.5	15.0	20.4	25.7	14.0	19.6	25.2	12.7	18.5	24.4
		76	TC	—	43.6	43.6	—	42.1	42.1	—	40.6	40.6	—	38.1	38.1
			SHC	—	16.0	23.4	—	15.3	20.1	—	14.7	19.9	—	13.6	19.1
1500 cfm	EA (wb)	58	TC	36.0	36.0	40.7	34.1	34.1	38.7	31.9	31.9	36.2	29.2	29.2	33.2
			SHC	31.2	36.0	40.7	29.6	34.1	38.7	27.5	31.9	36.2	25.1	29.2	33.2
		62	TC	36.8	36.8	39.6	34.2	34.2	40.3	31.2	31.2	37.7	29.2	29.2	34.6
			SHC	28.4	34.0	39.6	28.1	34.2	40.3	24.8	31.2	37.7	23.8	29.2	34.6
		67	TC	39.4	39.4	39.4	37.3	37.3	37.3	34.6	34.6	34.6	31.3	31.3	33.4
			SHC	22.6	28.6	34.5	21.9	28.2	34.5	21.2	27.8	34.5	19.9	26.7	33.4
		72	TC	42.0	42.0	42.0	40.7	40.7	40.7	38.5	38.5	38.5	35.6	35.6	35.6
			SHC	15.9	21.2	26.4	15.2	21.0	26.8	14.2	20.3	26.5	13.0	19.4	25.8
		76	TC	—	44.0	44.0	—	42.5	42.5	—	41.1	41.1	—	38.5	38.5
			SHC	—	16.2	21.2	—	15.5	20.7	—	14.9	20.7	—	13.9	19.9

NOTE(S):

a. See minimum-maximum airflow ratings on page 9.
b. Published capacity values are based on SEER2 static requirements.

LEGEND

— — Do Not Operate
cfm — Cubic Feet Per Minute (Supply Air)
EA (db) — Entering Air Temperature (dry bulb)
EA (wb) — Entering Air Temperature (wet bulb)
SHC — Sensible Heat Capacity (1000 Btuh) Gross
TC — Total Capacity (1000 Btuh) Gross

48/50FE*B04 — Unit with Humidi-MiZer® System in Subcooling Mode — Cooling Capacities[a]

TEMP (°F) AIR ENTERING CONDENSER (Edb)		AIR ENTERING EVAPORATOR — SCFM/BF								
		900 / 0.01			1200 / 0.02			1500 / 0.04		
		Air Entering Evaporator — Ewb (°F)								
		72	67	62	72	67	62	72	67	62
75	TC	34.11	38.41	40.13	34.27	36.95	37.77	38.26	35.36	31.22
	SHC	33.96	20.21	4.34	24.30	19.78	14.92	13.58	17.65	21.22
	kW	3.13	2.99	2.94	2.82	2.74	2.68	3.09	3.01	2.88
85	TC	16.51	30.88	46.31	30.26	35.29	40.58	35.93	30.44	25.33
	SHC	24.05	14.60	5.25	21.77	18.79	15.68	11.33	14.25	17.13
	kW	3.47	3.19	3.01	3.22	3.01	2.84	3.39	3.18	2.99
95	TC	30.43	35.10	36.83	30.96	33.64	34.46	34.96	32.06	27.91
	SHC	31.80	18.23	2.35	22.31	17.79	12.93	11.59	15.66	19.23
	kW	3.66	3.53	3.48	3.36	3.28	3.22	3.63	3.55	3.42
105	TC	13.20	27.58	43.00	26.95	31.99	37.27	32.62	27.13	22.02
	SHC	22.06	12.61	3.25	19.78	16.80	13.69	9.33	12.26	15.14
	kW	4.01	3.72	3.55	3.76	3.55	3.38	3.93	3.72	3.53
115	TC	27.12	31.79	33.52	27.65	30.33	31.15	31.65	28.75	24.61
	SHC	29.81	16.23	0.36	20.32	15.80	10.94	9.60	13.67	17.23
	kW	4.20	4.07	4.02	3.90	3.82	3.76	4.17	4.09	3.96

NOTE(S):

a. Published capacity values are based on SEER2 static requirements.

48/50FE*B04 — Unit with Humidi-MiZer System in Hot Gas Reheat Mode — Cooling Capacities[a]

TEMP (°F) AIR ENTERING CONDENSER (Edb)		AIR ENTERING EVAPORATOR — Ewb (°F)								
		75 Dry Bulb 62.5 Wet Bulb (50% Relative)			75 Dry Bulb 64 Wet Bulb (56% Relative)			75 Dry Bulb 65.3 Wet Bulb (60% Relative)		
		Air Entering Evaporator — Cfm								
		900	1200	1500	900	1200	1500	900	1200	1500
80	TC	11.85	12.53	12.78	12.40	13.06	13.31	12.87	13.51	13.77
	SHC	0.36	2.26	4.13	–1.28	0.18	1.67	–2.71	–1.61	–0.47
	kW	2.01	2.00	2.00	2.06	2.05	2.04	2.10	2.09	2.08
75	TC	12.70	13.42	13.69	13.27	13.96	14.23	13.71	14.41	14.69
	SHC	1.14	3.09	4.98	–0.48	1.01	2.53	–1.93	–0.79	0.39
	kW	1.99	1.98	1.98	2.04	2.03	2.02	2.08	2.07	2.06
70	TC	13.52	14.29	14.59	14.04	14.50	15.11	14.54	15.27	15.57
	SHC	1.92	3.89	5.82	0.22	1.40	3.35	–1.15	0.01	1.21
	kW	1.97	1.97	1.96	2.02	2.01	2.00	2.06	2.05	2.04
60	TC	15.10	15.94	16.28	15.65	16.46	16.80	16.09	16.90	17.25
	SHC	3.40	5.43	7.40	1.79	3.34	4.93	0.28	1.53	2.77
	kW	1.93	1.93	1.93	1.98	1.98	1.97	2.02	2.02	2.01
50	TC	16.56	17.47	17.85	17.08	18.00	18.38	17.61	18.47	18.84
	SHC	4.76	6.88	8.88	3.08	4.79	6.40	1.70	2.99	4.26
	kW	1.90	1.91	1.91	1.95	1.95	1.95	1.99	1.99	1.98
40	TC	18.01	18.99	19.40	18.51	19.53	19.95	19.08	20.00	20.42
	SHC	6.11	8.31	10.34	4.42	6.22	7.88	3.06	4.42	5.73
	kW	1.87	1.88	1.88	1.92	1.92	1.92	1.96	1.96	1.96

NOTE(S):

a. Published capacity values are based on SEER2 static requirements.

LEGEND

Edb — Entering Dry Bulb
Ewb — Entering Wet Bulb
kW — Compressor Power Input
SCFM/BF — Standard Cubic Feet per Minute/Bypass Factor
SHC — Sensible Heat Capacity (1000 Btuh) Gross
TC — Total Capacity (1000 Btuh) Gross

48/50FE*A05 Single Stage Cooling Capacities[a,b]

48/50FE*A05				AMBIENT TEMPERATURE (°F)											
				85			95			105			115		
				EA (db)			EA (db)			EA (db)			EA (db)		
				75	80	85	75	80	85	75	80	85	75	80	85
1200 cfm	EA (wb)	58	TC	43.1	43.1	49.0	40.2	40.2	45.8	—	—	—	—	—	—
			SHC	37.2	43.1	49.0	34.6	40.2	45.8	—	—	—	—	—	—
		62	TC	46.6	46.6	46.6	43.1	43.1	43.8	—	—	—	—	—	—
			SHC	33.4	39.7	46.0	31.2	37.5	43.8	—	—	—	—	—	—
		67	TC	52.3	52.3	52.3	49.0	49.0	49.0	44.9	44.9	44.9	40.1	40.1	40.1
			SHC	27.5	33.8	40.1	25.6	31.9	38.3	23.4	29.7	36.0	20.9	27.2	33.5
		72	TC	57.7	57.7	57.7	54.7	54.7	54.7	51.2	51.2	51.2	46.8	46.8	46.8
			SHC	21.2	27.5	33.8	19.5	25.8	32.2	17.6	24.0	30.3	15.4	21.7	28.1
		76	TC	—	61.4	61.4	—	58.6	58.6	—	55.4	55.4	—	51.9	51.9
			SHC	—	22.2	28.8	—	20.6	27.2	—	18.9	25.5	—	17.1	23.6
1400 cfm	EA (wb)	58	TC	46.3	46.3	52.6	43.3	43.3	49.3	39.8	39.8	45.5	—	—	—
			SHC	40.0	46.3	52.6	37.3	43.3	49.3	34.2	39.8	45.5	—	—	—
		62	TC	48.6	48.6	51.1	45.0	45.0	48.9	40.8	40.8	46.2	—	—	—
			SHC	36.5	43.8	51.1	34.4	41.6	48.9	31.9	39.0	46.2	—	—	—
		67	TC	54.2	54.2	54.2	50.9	50.9	50.9	47.0	47.0	47.0	41.9	41.9	41.9
			SHC	29.4	36.7	44.0	27.6	34.9	42.2	25.5	32.9	40.2	23.0	30.3	37.5
		72	TC	59.3	59.3	59.3	56.3	56.3	56.3	52.9	52.9	52.9	48.7	48.7	48.7
			SHC	22.0	29.1	36.3	20.3	27.5	34.7	18.5	25.8	33.1	16.4	23.8	31.1
		76	TC	—	62.7	62.7	—	59.9	59.9	—	56.6	56.6	—	53.2	53.2
			SHC	—	23.1	30.7	—	21.5	29.1	—	19.8	27.3	—	18.0	25.4
1600 cfm	EA (wb)	58	TC	49.0	49.0	55.6	46.0	46.0	52.3	42.4	42.4	48.4	38.5	38.5	44.0
			SHC	42.4	49.0	55.6	39.7	46.0	52.3	36.5	42.4	48.4	33.0	38.5	44.0
		62	TC	50.2	50.2	55.7	46.7	46.7	53.5	43.5	43.5	47.9	38.6	38.6	46.0
			SHC	39.3	47.5	55.7	37.2	45.4	53.5	33.4	40.6	47.9	31.1	38.6	46.0
		67	TC	55.6	55.6	55.6	52.3	52.3	52.3	48.5	48.5	48.5	43.2	43.2	43.2
			SHC	31.2	39.3	47.5	29.4	37.7	45.9	27.5	35.8	44.1	24.9	33.2	41.4
		72	TC	60.5	60.5	60.5	57.5	57.5	57.5	54.1	54.1	54.1	50.1	50.1	50.1
			SHC	22.6	30.5	38.4	20.9	29.0	37.0	19.2	27.3	35.5	17.2	25.5	33.9
		76	TC	—	63.7	63.7	—	60.9	60.9	—	57.6	57.6	—	54.1	54.1
			SHC	—	23.7	32.1	—	22.2	30.5	—	20.4	28.7	—	18.7	27.1
1800 cfm	EA (wb)	58	TC	51.2	51.2	58.0	48.3	48.3	54.8	44.7	44.7	50.9	40.6	40.6	46.4
			SHC	44.3	51.2	58.0	41.7	48.3	54.8	38.5	44.7	50.9	34.8	40.6	46.4
		62	TC	51.6	51.6	59.7	49.2	49.2	54.1	44.7	44.7	53.0	40.6	40.6	48.3
			SHC	41.8	50.8	59.7	38.1	46.1	54.1	36.4	44.7	53.0	32.9	40.6	48.3
		67	TC	56.7	56.7	56.7	53.4	53.4	53.4	49.6	49.6	49.6	44.3	44.3	45.1
			SHC	32.7	41.8	50.8	31.1	40.2	49.3	29.2	38.5	47.7	26.7	35.9	45.1
		72	TC	61.3	61.3	61.3	58.3	58.3	58.3	54.9	54.9	54.9	51.1	51.1	51.1
			SHC	23.1	31.7	40.3	21.5	30.3	39.1	19.7	28.7	37.7	17.9	27.1	36.3
		76	TC	—	64.4	64.4	—	61.6	61.6	—	58.3	58.3	—	54.8	54.8
			SHC	—	24.2	33.2	—	22.7	31.6	—	21.0	29.9	—	19.3	28.4
2000 cfm	EA (wb)	58	TC	53.0	53.0	60.0	50.1	50.1	56.9	46.7	46.7	53.2	42.4	42.4	48.4
			SHC	46.0	53.0	60.0	43.3	50.1	56.9	40.3	46.7	53.2	36.4	42.4	48.4
		62	TC	54.4	54.4	57.7	50.2	50.2	59.2	46.8	46.8	55.4	42.4	42.4	50.5
			SHC	41.3	49.5	57.7	41.1	50.2	59.2	38.2	46.8	55.4	34.4	42.4	50.5
		67	TC	57.5	57.5	57.5	54.3	54.3	54.3	50.4	50.4	51.1	45.3	45.3	48.7
			SHC	34.2	44.0.	53.8	32.6	42.6	52.5	30.9	41.0	51.1	28.5	38.6	48.7
		72	TC	62.0	62.0	62.0	59.0	59.0	59.0	55.6	55.6	55.6	51.8	51.8	51.8
			SHC	23.4	32.7	42.0	21.9	31.4	40.9	20.2	29.9	39.6	18.4	28.4	38.5
		76	TC	—	65.0	65.0	—	62.2	62.2	—	58.9	58.9	—	55.3	55.3
			SHC	—	24.5	34.0	—	23.0	32.6	—	21.3	31.0	—	19.7	29.4

NOTE(S):

a. See minimum-maximum airflow ratings on page 9.
b. Published capacity values are based on SEER2 static requirements.

LEGEND

— — Do Not Operate
cfm — Cubic Feet Per Minute (Supply Air)
EA (db) — Entering Air Temperature (dry bulb)
EA (wb) — Entering Air Temperature (wet bulb)
SHC — Sensible Heat Capacity (1000 Btuh) Gross
TC — Total Capacity (1000 Btuh) Gross

48/50FE*B05 — Unit with Humidi-MiZer® System in Subcooling Mode — Cooling Capacities[a]

TEMP (°F) AIR ENTERING CONDENSER (Edb)		AIR ENTERING EVAPORATOR — SCFM/BF								
		1200 / 0.04			1600 / 0.07			2000 / 0.10		
		Air Entering Evaporator — Ewb (°F)								
		72	67	62	72	67	62	72	67	62
75	TC	49.74	44.94	40.58	51.90	48.81	42.51	54.80	49.82	43.50
	SHC	20.80	26.22	31.65	29.75	25.13	43.61	26.80	35.16	16.70
	kW	2.50	2.47	2.44	4.03	4.06	4.09	2.53	2.50	2.53
85	TC	48.80	39.77	40.20	50.40	43.47	41.92	53.40	44.30	44.74
	SHC	17.29	24.04	28.65	25.72	22.81	40.42	22.88	32.69	39.87
	kW	2.53	2.51	2.48	4.07	4.09	4.12	2.56	2.53	2.51
95	TC	47.42	34.60	39.40	49.19	38.12	40.95	51.77	38.77	43.67
	SHC	13.40	21.87	25.30	22.02	20.49	36.91	18.78	30.21	36.26
	kW	2.57	2.54	2.52	4.11	4.13	4.16	2.60	2.57	2.55
105	TC	45.19	29.43	26.14	46.71	32.78	29.29	49.33	33.25	30.03
	SHC	8.71	19.70	26.16	17.11	18.18	25.97	13.90	27.73	36.70
	kW	4.52	2.58	2.57	2.92	4.17	4.19	4.55	2.61	2.59
115	TC	42.92	24.26	21.01	43.68	27.43	24.26	46.65	27.73	24.63
	SHC	4.05	17.53	24.01	11.67	15.86	23.94	8.85	25.25	34.25
	kW	5.41	2.62	2.61	3.81	4.21	4.22	5.43	2.64	2.63

NOTE(S):

a. Published capacity values are based on SEER2 static requirements.

48/50FE*B05 — Unit with Humidi-MiZer System in Hot Gas Reheat Mode — Cooling Capacities[a]

TEMP (°F) AIR ENTERING CONDENSER (Edb)		AIR ENTERING EVAPORATOR — Ewb (°F)								
		75 Dry Bulb 62.5 Wet Bulb (50% Relative)			75 Dry Bulb 64 Wet Bulb (56% Relative)			75 Dry Bulb 65.3 Wet Bulb (60% Relative)		
		Air Entering Evaporator — Cfm								
		1200	1600	2000	1200	1600	2000	1200	1600	2000
80	TC	11.65	11.44	11.20	13.18	12.98	12.73	13.47	13.26	12.88
	SHC	–3.80	–3.40	–2.95	7.77	8.17	8.61	–6.99	–6.98	–6.99
	kW	3.19	3.20	3.20	3.68	3.69	3.69	3.26	3.27	3.27
75	TC	13.89	13.76	13.47	13.54	13.41	13.12	15.39	15.37	15.03
	SHC	–1.54	–1.09	–0.76	6.74	7.19	7.51	–4.70	–4.51	–4.54
	kW	3.07	3.08	3.09	3.63	3.64	3.65	3.13	3.15	3.16
70	TC	15.98	15.88	15.60	16.91	16.82	16.53	17.40	17.12	16.67
	SHC	0.68	1.11	1.36	–1.25	–0.83	–0.57	–2.23	–2.21	–2.36
	kW	2.96	2.97	2.98	3.00	3.01	3.02	3.01	3.02	3.01
60	TC	19.24	19.18	18.82	17.30	17.24	16.88	20.43	19.98	24.36
	SHC	4.77	5.17	5.26	–2.20	–1.80	–1.71	2.67	2.62	4.24
	kW	3.21	3.26	3.18	2.90	2.96	2.88	3.26	2.97	3.02
50	TC	13.45	13.58	13.53	14.97	15.11	15.06	13.88	14.00	13.95
	SHC	7.82	7.54	7.16	3.56	3.29	2.91	7.06	6.66	6.19
	kW	3.04	3.10	3.15	3.40	3.47	3.51	3.10	3.17	3.21
40	TC	13.45	13.58	13.53	15.40	15.53	15.48	13.88	14.00	13.95
	SHC	7.82	7.54	7.16	2.59	2.31	1.93	7.06	6.66	6.19
	kW	3.14	3.23	3.15	3.33	3.42	3.34	3.22	3.31	3.01

NOTE(S):

a. Published capacity values are based on SEER2 static requirements.

LEGEND

Edb — Entering Dry Bulb
Ewb — Entering Wet Bulb
kW — Compressor Power Input
SCFM/BF — Standard Cubic Feet per Minute/Bypass Factor
SHC — Sensible Heat Capacity (1000 Btuh) Gross
TC — Total Capacity (1000 Btuh) Gross

48/50FE*A06 Single Stage Cooling Capacities[a,b]

48/50FE*A06				AMBIENT TEMPERATURE (°F)											
				85			95			105			115		
				EA (db)			EA (db)			EA (db)			EA (db)		
				75	80	85	75	80	85	75	80	85	75	80	85
1500 cfm	EA (wb)	58	TC	52.7	52.7	59.6	49.6	49.6	56.1	46.1	46.1	52.3	42.4	42.4	48.2
			SHC	45.7	52.7	59.6	43.0	49.6	56.1	40.0	46.1	52.3	36.7	42.4	48.2
		62	TC	56.1	56.1	56.6	52.2	52.2	54.8	47.7	47.7	52.4	42.8	42.8	49.7
			SHC	41.4	49.0	56.6	39.5	47.1	54.8	37.1	44.8	52.4	34.6	42.1	49.7
		67	TC	61.6	61.6	61.6	58.7	58.7	58.7	54.5	54.5	54.5	49.5	49.5	49.5
			SHC	33.7	40.8	48.0	32.5	40.0	47.4	30.6	38.1	45.7	28.3	35.9	43.5
		72	TC	66.5	66.5	66.5	64.6	64.6	64.6	60.9	60.9	60.9	56.4	56.4	56.4
			SHC	26.3	33.0	39.7	25.2	32.3	39.3	23.5	30.8	38.0	21.5	28.9	36.3
		76	TC	—	69.8	69.8	—	67.6	67.6	—	65.4	65.4	—	61.3	61.3
			SHC	—	26.8	35.0	—	25.6	33.9	—	24.6	30.5	—	23.0	29.8
1750 cfm	EA (wb)	58	TC	56.0	56.0	63.3	53.0	53.0	59.9	49.4	49.4	56.0	45.4	45.4	51.6
			SHC	48.7	56.0	63.3	46.0	53.0	59.9	42.8	49.4	56.0	39.3	45.4	51.6
		62	TC	58.1	58.1	62.1	54.2	54.2	60.5	49.8	49.8	57.7	46.4	46.4	50.7
			SHC	44.8	53.4	62.1	42.9	51.7	60.5	40.4	49.0	57.7	36.0	43.3	50.7
		67	TC	63.8	63.8	63.8	60.6	60.6	60.6	56.3	56.3	56.3	51.3	51.3	51.3
			SHC	35.9	44.1	52.3	34.7	43.2	51.8	32.8	41.5	50.2	30.6	39.4	48.2
		72	TC	67.9	67.9	67.9	66.0	66.0	66.0	62.6	62.6	62.6	58.0	58.0	58.0
			SHC	26.9	34.5	42.0	26.0	34.0	42.1	24.4	32.8	41.2	22.5	31.0	39.5
		76	TC	—	71.2	71.2	—	68.8	68.8	—	66.5	66.5	—	62.7	62.7
			SHC	—	27.4	37.0	—	26.5	33.6	—	25.6	33.4	—	24.1	32.1
2000 cfm	EA (wb)	58	TC	58.7	58.7	66.3	55.7	55.7	63.0	52.1	52.1	59.0	48.0	48.0	54.5
			SHC	51.1	58.7	66.3	48.4	55.7	63.0	45.2	52.1	59.0	41.6	48.0	54.5
		62	TC	59.7	59.7	67.0	56.8	56.8	63.2	52.5	52.5	60.5	48.1	48.1	56.7
			SHC	47.7	57.4	67.0	45.0	54.1	63.2	42.5	51.5	60.5	39.5	48.1	56.7
		67	TC	64.8	64.8	64.8	62.0	62.0	62.0	57.7	57.7	57.7	52.7	52.7	52.7
			SHC	37.3	46.3	55.2	36.6	46.2	55.8	34.9	44.7	54.5	32.8	42.7	52.7
		72	TC	69.0	69.0	69.0	66.7	66.7	66.7	63.8	63.8	63.8	59.2	59.2	59.2
			SHC	27.5	35.8	44.0	26.5	35.3	44.1	25.2	34.6	44.0	23.4	33.0	42.6
		76	TC	—	72.2	72.2	—	69.7	69.7	—	67.3	67.3	—	63.6	63.6
			SHC	—	28.3	36.2	—	27.2	35.4	—	26.4	35.3	—	25.0	34.2
2250 cfm	EA (wb)	58	TC	60.9	60.9	68.8	57.9	57.9	65.5	54.4	54.4	61.5	50.2	50.2	56.9
			SHC	53.0	60.9	68.8	50.3	57.9	65.5	47.2	54.4	61.5	43.5	50.2	56.9
		62	TC	61.8	61.8	70.1	58.7	58.7	66.2	54.4	54.4	64.0	50.3	50.3	59.3
			SHC	49.8	60.0	70.1	47.0	56.6	66.2	44.8	54.4	64.0	41.3	50.3	59.3
		67	TC	65.6	65.6	65.6	63.1	63.1	63.1	58.8	58.8	58.8	53.6	53.6	56.9
			SHC	38.6	48.4	58.1	38.4	48.9	59.5	36.8	47.7	58.6	34.7	45.8	56.9
		72	TC	69.7	69.7	69.7	67.3	67.3	67.3	64.8	64.8	64.8	60.2	60.2	60.2
			SHC	28.0	36.9	45.8	26.9	36.4	45.8	26.0	36.3	46.6	24.1	34.8	45.4
		76	TC	—	73.0	73.0	—	70.4	70.4	—	67.8	67.8	—	64.4	64.4
			SHC	—	29.1	37.9	—	28.0	37.0	—	27.1	36.7	—	25.9	36.1
2500 cfm	EA (wb)	58	TC	62.6	62.6	70.7	59.8	59.8	67.6	56.2	56.2	63.7	52.1	52.1	59.1
			SHC	54.5	62.6	70.7	52.0	59.8	67.6	48.8	56.2	63.7	45.2	52.1	59.1
		62	TC	64.3	64.3	69.0	59.9	59.9	70.3	56.3	56.3	66.2	52.2	52.2	61.5
			SHC	49.8	59.4	69.0	49.4	59.9	70.3	46.4	56.3	66.2	42.9	52.2	61.5
		67	TC	66.3	66.3	66.3	63.9	63.9	63.9	59.7	59.7	62.4	54.4	54.4	60.8
			SHC	39.9	50.4	60.8	40.0	51.5	63.0	38.6	50.5	62.4	36.6	48.7	60.8
		72	TC	70.4	70.4	70.4	67.9	67.9	67.9	65.3	65.3	65.3	60.9	60.9	60.9
			SHC	28.5	38.1	47.6	27.4	37.6	47.7	26.6	37.7	48.9	24.9	36.5	48.1
		76	TC	—	73.6	73.6	—	70.9	70.9	—	68.1	68.1	—	64.9	64.9
			SHC	—	29.8	39.4	—	28.6	38.5	—	27.6	37.8	—	26.7	37.8

NOTE(S):

a. See minimum-maximum airflow ratings on page 9.
b. Published capacity values are based on SEER2 static requirements.

LEGEND

— — Do Not Operate
cfm — Cubic Feet Per Minute (Supply Air)
EA (db) — Entering Air Temperature (dry bulb)
EA (wb) — Entering Air Temperature (wet bulb)
SHC — Sensible Heat Capacity (1000 Btuh) Gross
TC — Total Capacity (1000 Btuh) Gross

48/50FE*B06 — Unit with Humidi-MiZer® System in Subcooling Mode — Cooling Capacities[a]

TEMP (°F) AIR ENTERING CONDENSER (Edb)		AIR ENTERING EVAPORATOR — SCFM/BF								
		1500 / 0.01			2000 / 0.02			2500 / 0.03		
		Air Entering Evaporator — Ewb (°F)								
		72	67	62	72	67	62	72	67	62
75	TC	72.90	66.35	61.02	76.45	70.00	64.32	78.39	71.96	66.80
	SHC	27.40	35.54	44.24	29.57	40.50	51.23	30.19	43.54	55.90
	kW	3.90	3.85	3.82	4.16	4.20	4.27	4.58	4.54	4.50
85	TC	67.90	62.19	56.96	71.45	65.84	60.26	73.39	67.79	62.74
	SHC	23.50	32.46	41.23	25.67	37.42	48.22	26.29	40.46	52.89
	kW	4.30	4.26	4.22	4.56	4.61	4.67	4.98	4.95	4.90
95	TC	62.90	58.03	52.89	67.64	62.00	57.13	67.35	61.66	57.24
	SHC	19.60	29.38	38.23	20.43	32.10	43.58	19.95	34.00	47.00
	kW	4.70	4.67	4.62	5.16	5.20	5.25	5.69	5.64	5.60
105	TC	57.90	53.86	48.83	62.64	57.84	53.07	62.35	57.49	53.18
	SHC	15.70	26.30	35.22	16.53	29.02	40.58	16.05	30.92	43.99
	kW	5.10	5.08	5.02	5.56	5.61	5.65	6.09	6.05	6.00
115	TC	48.70	44.15	40.08	48.53	43.70	39.65	52.59	47.98	44.30
	SHC	9.00	19.05	28.91	7.27	19.70	31.91	8.35	23.43	36.50
	kW	6.10	6.05	6.00	6.35	6.40	6.45	6.79	6.74	6.70

NOTE(S):

a. Published capacity values are based on SEER2 static requirements.

48/50FE*B06 — Unit with Humidi-MiZer System in Hot Gas Reheat Mode — Cooling Capacities[a]

TEMP (°F) AIR ENTERING CONDENSER (Edb)		AIR ENTERING EVAPORATOR — Ewb (°F)								
		75 Dry Bulb 62.5 Wet Bulb (50% Relative)			75 Dry Bulb 64 Wet Bulb (56% Relative)			75 Dry Bulb 65.3 Wet Bulb (60% Relative)		
		Air Entering Evaporator — Cfm								
		1500	2000	2500	1500	2000	2500	1500	2000	2500
80	TC	19.31	19.07	18.83	23.35	23.09	22.78	26.78	26.52	26.14
	SHC	–1.12	–0.29	0.61	1.79	2.29	3.76	5.80	6.05	6.32
	kW	3.64	3.64	3.65	4.10	4.11	4.75	4.72	4.72	4.73
75	TC	20.69	20.63	19.31	24.36	23.43	22.96	21.93	21.88	20.51
	SHC	2.63	5.39	7.58	0.49	–2.30	3.92	–3.24	–1.91	–1.12
	kW	3.62	4.02	4.65	3.71	4.10	4.74	3.79	4.18	4.81
70	TC	21.79	21.77	20.49	22.45	22.44	21.13	20.03	20.02	18.68
	SHC	3.67	6.48	8.69	0.53	2.56	4.03	–2.20	–0.84	–0.01
	kW	3.60	4.00	4.63	3.69	4.09	4.72	3.60	4.16	4.79
60	TC	23.92	23.97	22.74	24.60	24.66	23.40	25.19	25.25	23.96
	SHC	5.70	8.58	10.84	2.57	4.67	6.19	–1.16	0.28	1.16
	kW	3.57	3.97	4.61	3.66	4.06	4.69	3.73	4.13	4.77
50	TC	20.07	20.13	18.94	24.00	23.83	22.61	24.27	24.09	22.87
	SHC	6.56	10.63	12.95	5.39	5.73	7.31	4.92	5.18	6.70
	kW	3.31	3.95	4.58	3.75	3.68	4.67	3.78	3.71	4.70
40	TC	22.03	22.23	21.08	28.75	28.95	27.77	29.37	29.57	28.37
	SHC	9.62	12.64	15.02	6.51	8.76	10.38	3.79	5.38	6.36
	kW	3.51	3.92	4.56	3.59	4.00	4.65	3.67	4.08	4.72

NOTE(S):

a. Published capacity values are based on SEER2 static requirements.

LEGEND

Edb — Entering Dry Bulb
Ewb — Entering Wet Bulb
kW — Compressor Power Input
SCFM/BF — Standard Cubic Feet per Minute/Bypass Factor
SHC — Sensible Heat Capacity (1000 Btuh) Gross
TC — Total Capacity (1000 Btuh) Gross

48/50FE*M07 High Stage Cooling Capacities[a,b]

48/50FE*M07				AMBIENT TEMPERATURE (°F)											
				85			95			105			115		
				EA (db)			EA (db)			EA (db)			EA (db)		
				75	80	85	75	80	85	75	80	85	75	80	85
1800 cfm	EA (wb)	58	TC	65.4	65.4	74.3	62.1	62.1	70.8	58.7	58.7	67.1	55.2	55.2	63.2
			SHC	56.4	65.4	74.3	53.5	62.1	70.8	50.4	58.7	67.1	47.2	55.2	63.2
		62	TC	69.3	69.3	69.9	65.4	65.4	67.5	61.2	61.2	65.0	56.9	56.9	62.5
			SHC	50.4	60.2	69.9	48.1	57.8	67.5	45.6	55.3	65.0	43.2	52.8	62.5
		67	TC	76.7	76.7	76.7	72.5	72.5	72.5	68.1	68.1	68.1	63.5	63.5	63.5
			SHC	41.1	50.8	60.6	38.7	48.5	58.2	36.3	46.1	55.8	33.9	43.6	53.3
		72	TC	84.8	84.8	84.8	80.2	80.2	80.2	75.5	75.5	75.5	70.6	70.6	70.6
			SHC	31.6	41.4	51.2	29.2	39.0	48.8	26.8	36.6	46.4	24.4	34.1	43.9
		76	TC	—	91.6	91.6	—	86.8	86.8	—	81.8	81.8	—	76.6	76.6
			SHC	—	33.6	43.5	—	31.3	41.2	—	28.9	38.8	—	26.5	36.4
2100 cfm	EA (wb)	58	TC	69.5	69.5	79.0	66.1	66.1	75.2	62.5	62.5	71.2	58.7	58.7	67.1
			SHC	60.1	69.5	79.0	57.0	66.1	75.2	53.7	62.5	71.2	50.3	58.7	67.1
		62	TC	71.8	71.8	77.4	67.6	67.6	74.9	63.4	63.4	72.3	59.0	59.0	69.5
			SHC	55.0	66.2	77.4	52.5	63.7	74.9	50.0	61.2	72.3	47.4	58.4	69.5
		67	TC	79.2	79.2	79.2	74.7	74.7	74.7	70.1	70.1	70.1	65.3	65.3	65.3
			SHC	44.0	55.3	66.6	41.6	52.9	64.2	39.1	50.4	61.7	36.7	47.9	59.2
		72	TC	87.3	87.3	87.3	82.6	82.6	82.6	77.7	77.7	77.7	72.5	72.5	72.5
			SHC	32.8	44.1	55.5	30.4	41.7	53.1	28.0	39.3	50.6	25.5	36.8	48.1
		76	TC	—	94.2	94.2	—	89.2	89.2	—	83.9	83.9	—	78.5	78.5
			SHC	—	35.1	46.6	—	32.7	44.2	—	30.3	41.7	—	27.7	39.1
2400 cfm	EA (wb)	58	TC	73.0	73.0	82.8	69.3	69.3	78.8	65.5	65.5	74.7	61.6	61.6	70.3
			SHC	63.1	73	82.8	59.8	69.3	78.8	56.4	65.5	74.7	52.8	61.6	70.3
		62	TC	73.8	73.8	84.5	70.2	70.2	79.6	65.6	65.6	77.8	61.6	61.6	73.3
			SHC	59.2	71.8	84.5	55.6	67.6	79.6	53.5	65.6	77.8	50.0	61.6	73.3
		67	TC	81.0	81.0	81.0	76.4	76.4	76.4	71.7	71.7	71.7	66.7	66.7	66.7
			SHC	46.7	59.5	72.4	44.3	57.1	69.9	41.8	54.6	67.4	39.3	52.1	64.9
		72	TC	89.2	89.2	89.2	84.4	84.4	84.4	79.3	79.3	79.3	74.0	74.0	74.0
			SHC	33.8	46.7	59.5	31.4	44.3	57.1	29.0	41.8	54.6	26.5	39.2	52.0
		76	TC	—	96.1	96.1	—	90.9	90.9	—	85.4	85.4	—	79.8	79.8
			SHC	—	36.3	49.3	—	33.9	46.8	—	31.3	44.2	—	28.8	41.5
2700 cfm	EA (wb)	58	TC	75.9	75.9	86.1	72.1	72.1	81.9	68.1	68.1	77.5	64.0	64.0	73.0
			SHC	65.7	75.9	86.1	62.3	72.1	81.9	58.7	68.1	77.5	54.9	64.0	73.0
		62	TC	76.0	76.0	89.5	72.2	72.2	85.2	68.2	68.2	80.7	64.0	64.0	76.0
			SHC	62.4	76.0	89.5	59.1	72.2	85.2	55.6	68.2	80.7	52.0	64.0	76.0
		67	TC	82.5	82.5	82.5	77.8	77.8	77.8	72.9	72.9	73.0	67.8	67.8	70.4
			SHC	49.3	63.7	78.0	46.9	61.2	75.5	44.4	58.7	73.0	41.9	56.1	70.4
		72	TC	90.8	90.8	90.8	85.7	85.7	85.7	80.5	80.5	80.5	75.1	75.1	75.1
			SHC	34.8	49.1	63.4	32.4	46.7	61.0	29.9	44.1	58.4	27.3	41.6	55.8
		76	TC	—	97.6	97.6	—	92.2	92.2	—	86.5	86.5	—	80.7	80.7
			SHC	—	37.3	51.7	—	34.8	49.1	—	32.3	46.4	—	29.6	43.6
3000 cfm	EA (wb)	58	TC	78.4	78.4	88.8	74.4	74.4	84.5	70.3	70.3	80.0	66.0	66.0	75.2
			SHC	67.9	78.4	88.8	64.3	74.4	84.5	60.6	70.3	80.0	56.7	66.0	75.2
		62	TC	78.5	78.5	92.4	74.5	74.5	87.9	70.4	70.4	83.3	66.1	66.1	78.4
			SHC	64.5	78.5	92.4	61.1	74.5	87.9	57.5	70.4	83.3	53.7	66.1	78.4
		67	TC	83.6	83.6	83.6	78.8	78.8	81.0	73.9	73.9	78.4	68.7	68.7	75.7
			SHC	51.9	67.7	83.5	49.4	65.2	81.0	46.9	62.7	78.4	44.4	60.0	75.7
		72	TC	92.0	92.0	92.0	86.9	86.9	86.9	81.5	81.5	81.5	76.0	76.0	76.0
			SHC	35.6	51.4	67.2	33.2	48.9	64.7	30.7	46.4	62.1	28.2	43.8	59.5
		76	TC	—	98.7	98.7	—	93.2	93.2	—	87.4	87.4	—	81.4	81.4
			SHC	—	38.2	53.9	—	35.7	51.2	—	33.0	48.4	—	30.3	45.4

NOTE(S):

a. See minimum-maximum airflow ratings on page 9.
b. Published capacity values are based on SEER2 static requirements.

LEGEND

— — Do Not Operate
cfm — Cubic Feet Per Minute (Supply Air)
EA (db) — Entering Air Temperature (dry bulb)
EA (wb) — Entering Air Temperature (wet bulb)
SHC — Sensible Heat Capacity (1000 Btuh) Gross
TC — Total Capacity (1000 Btuh) Gross

48/50FE*M07 Low Stage Cooling Capacities[a,b]

48/50FE*M07				AMBIENT TEMPERATURE (°F)											
				85			95			105			115		
				EA (db)			EA (db)			EA (db)			EA (db)		
				75	80	85	75	80	85	75	80	85	75	80	85
1200 cfm	EA (wb)	58	TC	42.3	42.3	48.5	39.0	39.0	44.9	35.5	35.5	41.2	32.0	32.0	37.4
			SHC	36.0	42.3	48.5	33.0	39.0	44.9	29.8	35.5	41.2	26.6	32.0	37.4
		62	TC	46.1	46.1	46.1	42.1	42.1	42.7	37.8	37.8	40.0	33.4	33.4	37.2
			SHC	32.1	38.7	45.3	29.5	36.1	42.7	26.8	33.4	40.0	24.1	30.7	37.2
		67	TC	52.6	52.6	52.6	48.4	48.4	48.4	43.9	43.9	43.9	39.3	39.3	39.3
			SHC	26.7	33.3	39.8	24.0	30.6	37.2	21.4	28.0	34.6	18.6	25.2	31.8
		72	TC	59.8	59.8	59.8	55.3	55.3	55.3	50.6	50.6	50.6	45.7	45.7	45.7
			SHC	21.1	27.7	34.3	18.5	25.1	31.7	15.8	22.4	29.0	13.1	19.7	26.3
		76	TC	—	66.0	66.0	—	61.3	61.3	—	56.4	56.4	—	51.2	51.2
			SHC	—	23.1	29.7	—	20.5	27.1	—	17.9	24.5	—	15.2	21.8
1400 cfm	EA (wb)	58	TC	45.9	45.9	52.5	42.4	42.4	48.8	38.8	38.8	44.8	35.0	35.0	40.7
			SHC	39.2	45.9	52.5	36.0	42.4	48.8	32.7	38.8	44.8	29.2	35.0	40.7
		62	TC	48.4	48.4	50.9	44.1	44.1	48.2	39.7	39.7	45.5	35.1	35.1	42.6
			SHC	35.6	43.3	50.9	32.9	40.6	48.2	30.2	37.8	45.5	27.3	35.0	42.6
		67	TC	55.1	55.1	55.1	50.6	50.6	50.6	45.9	45.9	45.9	41.0	41.0	41.0
			SHC	29.0	36.7	44.4	26.4	34.0	41.7	23.6	31.3	39.0	20.8	28.5	36.1
		72	TC	62.4	62.4	62.4	57.7	57.7	57.7	52.8	52.8	52.8	47.6	47.6	47.6
			SHC	22.3	30.0	37.7	19.7	27.4	35.1	16.9	24.6	32.3	14.2	21.9	29.6
		76	TC	—	68.7	68.7	—	63.8	63.8	—	58.6	58.6	—	53.1	53.1
			SHC	—	24.5	32.2	—	21.9	29.6	—	19.2	26.9	—	16.4	24.0
1600 cfm	EA (wb)	58	TC	49.0	49.0	56.0	45.3	45.3	52.0	41.5	41.5	47.9	37.5	37.5	43.6
			SHC	42.0	49.0	56.0	38.6	45.3	52	35.1	41.5	47.9	31.5	37.5	43.6
		62	TC	50.2	50.2	56.4	45.9	45.9	53.6	41.4	41.4	50.0	37.6	37.6	45.7
			SHC	38.9	47.7	56.4	36.2	44.9	53.6	32.8	41.4	50.0	29.6	37.6	45.7
		67	TC	57.0	57.0	57.0	52.3	52.3	52.3	47.4	47.4	47.4	42.4	42.4	42.4
			SHC	31.2	40.0	48.8	28.5	37.3	46.0	25.7	34.5	43.3	22.9	31.6	40.4
		72	TC	64.5	64.5	64.5	59.6	59.6	59.6	54.4	54.4	54.4	49.1	49.1	49.1
			SHC	23.4	32.2	40.9	20.7	29.5	38.3	17.9	26.7	35.5	15.1	23.9	32.7
		76	TC	—	70.8	70.8	—	65.6	65.6	—	60.2	60.2	—	54.3	54.3
			SHC	—	25.8	34.6	—	23.0	31.7	—	20.3	29.1	—	17.4	26.2
1800 cfm	EA (wb)	58	TC	51.7	51.7	59.0	47.9	47.9	54.9	43.9	43.9	50.6	39.8	39.8	46.0
			SHC	44.4	51.7	59.0	40.9	47.9	54.9	37.3	43.9	50.6	33.5	39.8	46.0
		62	TC	51.9	51.9	61.4	48.0	48.0	57.3	44.0	44.0	52.9	39.8	39.8	48.2
			SHC	42.0	51.7	61.4	38.7	48.0	57.3	35.1	44.0	52.9	31.5	39.8	48.2
		67	TC	58.5	58.5	58.5	53.7	53.7	53.7	48.7	48.7	48.7	43.5	43.5	44.5
			SHC	33.3	43.2	53.0	30.6	40.4	50.2	27.7	37.6	47.4	24.9	34.7	44.5
		72	TC	66.1	66.1	66.1	61.0	61.0	61.0	55.8	55.8	55.8	50.2	50.2	50.2
			SHC	24.3	34.2	44.1	21.6	31.5	41.4	18.8	28.7	38.6	15.9	25.8	35.7
		76	TC	—	72.3	72.3	—	66.9	66.9	—	61.2	61.2	—	55.2	55.2
			SHC	—	26.8	36.7	—	24.1	34.0	—	21.2	31.1	—	18.3	28.1
2000 cfm	EA (wb)	58	TC	54.1	54.1	61.7	50.1	50.1	57.4	46.0	46.0	52.9	41.7	41.7	48.2
			SHC	46.5	54.1	61.7	42.9	50.1	57.4	39.1	46.0	52.9	35.2	41.7	48.2
		62	TC	54.2	54.2	64.3	50.2	50.2	59.9	46.1	46.1	55.3	41.8	41.8	50.4
			SHC	44.1	54.2	64.3	40.6	50.2	59.9	36.9	46.1	55.3	33.1	41.8	50.4
		67	TC	59.7	59.7	59.7	54.9	54.9	54.9	49.7	49.7	51.5	44.4	44.4	48.6
			SHC	35.3	46.2	57.1	32.5	43.4	54.3	29.7	40.6	51.5	26.8	37.7	48.6
		72	TC	67.4	67.4	67.4	62.2	62.2	62.2	56.8	56.8	56.8	51.1	51.1	51.1
			SHC	25.2	36.2	47.1	22.4	33.4	44.3	19.6	30.5	41.5	16.7	27.6	38.6
		76	TC	—	73.5	73.5	—	67.9	67.9	—	62.0	62.0	—	55.7	55.7
			SHC	—	27.8	38.8	—	25.0	35.9	—	22.1	32.9	—	19.0	29.7

NOTE(S):

a. See minimum-maximum airflow ratings on page 9.
b. Published capacity values are based on SEER2 static requirements.

LEGEND

— — Do Not Operate
cfm — Cubic Feet Per Minute (Supply Air)
EA (db) — Entering Air Temperature (dry bulb)
EA (wb) — Entering Air Temperature (wet bulb)
SHC — Sensible Heat Capacity (1000 Btuh) Gross
TC — Total Capacity (1000 Btuh) Gross

48/50FE*N07 — Unit with Humidi-MiZer® System in Subcooling Mode — Cooling Capacities[a]

TEMP (°F) AIR ENTERING CONDENSER (Edb)		AIR ENTERING EVAPORATOR — SCFM/BF								
		1800 / 0.06			2400 / 0.08			3000 / 0.10		
		Air Entering Evaporator — Ewb (°F)								
		72	67	62	72	67	62	72	67	62
75	TC	78.38	69.20	64.70	84.37	76.99	72.48	84.15	76.56	72.44
	SHC	31.20	38.91	35.62	39.12	49.13	45.87	40.04	52.20	48.52
	kW	5.34	5.27	5.12	5.27	5.31	5.26	5.40	5.33	5.18
85	TC	70.75	64.04	61.40	78.33	71.48	62.50	78.08	70.90	68.77
	SHC	26.19	34.36	38.96	33.55	44.10	43.76	34.31	46.89	53.73
	kW	5.80	5.74	3.07	5.74	5.77	3.13	5.85	5.79	3.10
95	TC	58.10	58.24	52.09	65.01	65.29	58.92	64.16	64.46	58.39
	SHC	30.14	29.73	39.29	38.76	39.01	50.96	40.56	41.43	54.99
	kW	6.32	6.29	6.05	6.27	6.32	6.16	6.37	6.33	6.10
105	TC	52.78	52.83	48.51	64.24	58.04	52.51	58.24	58.51	54.42
	SHC	23.95	25.27	40.72	24.42	35.64	46.60	33.40	36.23	57.94
	kW	6.86	6.84	3.51	5.39	5.42	5.45	6.91	6.88	3.54
115	TC	51.38	45.80	40.82	57.85	52.10	46.95	56.72	50.77	45.78
	SHC	10.12	19.38	28.51	15.80	27.48	38.79	14.99	28.88	41.93
	kW	7.63	7.58	7.54	7.58	7.61	7.64	7.67	7.62	7.59

NOTE(S):

a. Published capacity values are based on SEER2 static requirements.

48/50FE*N07 — Unit with Humidi-MiZer System in Hot Gas Reheat Mode — Cooling Capacities[a]

TEMP (°F) AIR ENTERING CONDENSER (Edb)		AIR ENTERING EVAPORATOR — Ewb (°F)								
		75 Dry Bulb 62.5 Wet Bulb (50% Relative)			75 Dry Bulb 64 Wet Bulb (56% Relative)			75 Dry Bulb 65.3 Wet Bulb (60% Relative)		
		Air Entering Evaporator — Cfm								
		1800	2400	3000	1800	2400	3000	1800	2400	3000
80	TC	13.04	12.51	10.87	11.79	12.79	13.41	13.59	13.06	11.42
	SHC	3.02	3.70	3.55	–0.94	1.11	3.46	–0.98	–1.08	–2.01
	kW	5.17	5.50	6.13	5.57	5.58	5.58	5.32	5.64	6.26
75	TC	13.32	14.39	15.02	16.59	17.66	18.30	19.83	20.92	21.56
	SHC	1.60	4.23	7.07	5.19	7.29	9.64	8.70	10.34	12.28
	kW	5.29	5.31	5.31	5.26	5.27	5.28	5.23	5.24	5.25
70	TC	16.08	17.39	18.15	17.48	18.68	19.47	18.06	19.35	20.25
	SHC	–2.10	0.78	3.76	4.35	6.58	9.09	–4.80	–2.93	–0.74
	kW	4.00	3.95	3.93	5.06	5.05	5.03	3.87	3.83	3.81
60	TC	16.65	17.59	18.14	18.76	19.70	20.27	18.85	18.74	19.66
	SHC	–1.57	0.94	3.71	3.89	5.87	8.16	–4.25	–3.72	–1.49
	kW	3.98	4.02	4.04	4.80	4.83	4.85	4.12	4.09	4.04
50	TC	16.68	17.50	17.99	19.90	20.72	21.79	18.28	19.70	20.21
	SHC	–1.57	0.83	3.54	3.29	5.17	7.96	–4.79	–2.79	–0.97
	kW	4.07	4.12	4.16	4.56	4.61	4.54	4.06	4.00	4.03
40	TC	17.38	18.17	18.80	22.46	21.75	19.35	19.12	20.68	21.17
	SHC	–0.89	1.47	3.06	5.69	4.46	2.54	–3.97	–1.81	–0.02
	kW	4.01	4.08	4.13	3.96	4.39	4.92	3.98	3.92	3.95

NOTE(S):

a. Published capacity values are based on SEER2 static requirements.

LEGEND

Ewb — Entering wet bulb
kW — compressor Power Input
SCFM/BF — Standard Cubic Feet per Minute/Bypass Factor
SHC — Sensible Heat Capacity (1000 Btuh) Gross
TC — Total Capacity (1000 Btuh) Gross

Pressure Drops for Electric and Gas Heating Units

Pressure Drop for Electric Heat 3 Ton Units — 1 Stage Heat

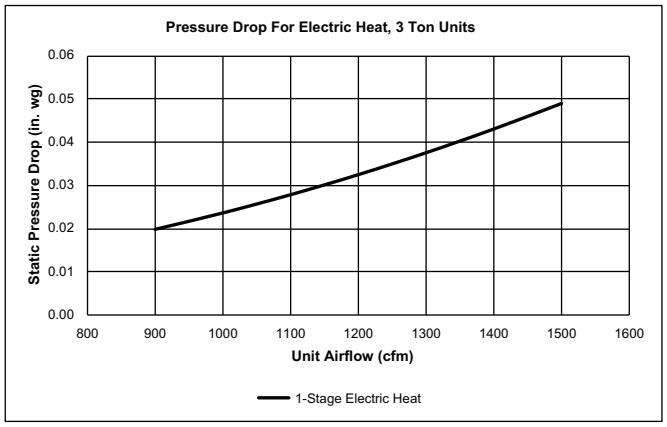

Pressure Drop for Electric Heat 4 to 6 Ton Units — 1 and 2 Stage Heat

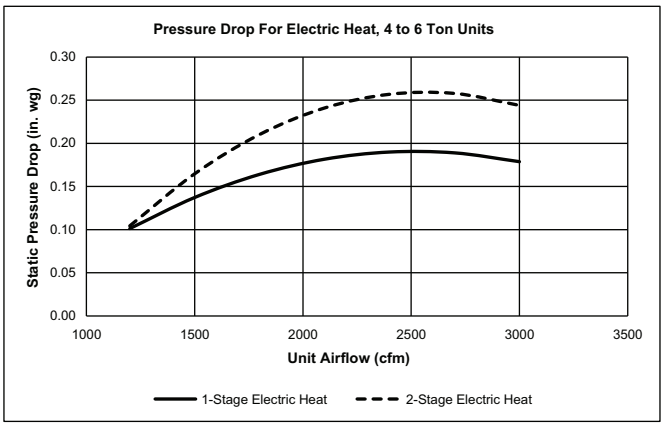

Pressure Drops across Gas Heat Exchanger for 48FE Ultra Low NOx 3 to 5 Ton Units

Pressure Drop across Gas Heat Exchanger, 48FE Ultra Low NOx — 3 Ton Units

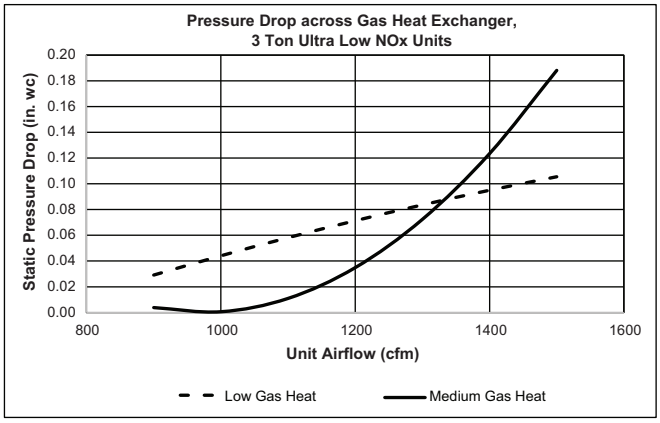

Pressure Drop across Gas Heat Exchanger, 48FE Ultra Low NOx — 4 to 5 Ton Units

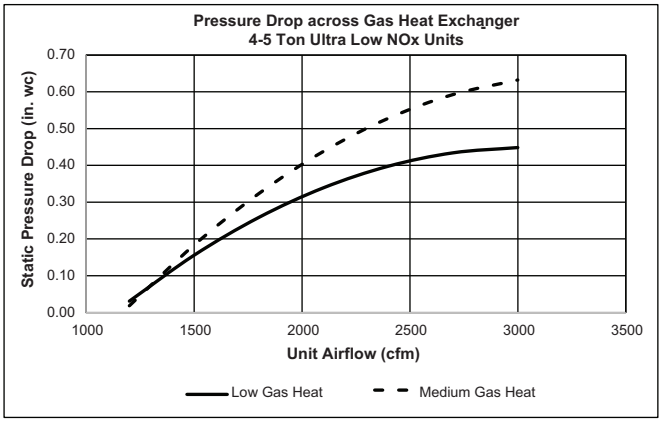

Single-Phase Gas Heat Stages

UNIT SIZE	HEAT SIZE		
1 Phase	Low	Med	High
04	1	1	—
05	1	1	1
06	1	1	1

Three-Phase Gas Heat Stages

UNIT SIZE	HEAT SIZE		
3 Phase	Low	Med	High
04	1	2	—
05	1	1	2
06	1	1	2
07	1	1	2

Gas Heat Stages for 48FE Ultra Low NOx — 3-5 Ton Units

UNIT SIZE	HEAT SIZE
1-Phase or 3-Phase	Low or Medium
04	1
05	1
06	1

Gas Heat Static Pressure Deductions (in. wg) — 3 Ton Units

CFM	900	1000	1100	1200	1300	1400	1500
LOW GAS HEAT DEDUCTION	0.63	0.58	0.53	0.47	0.40	0.33	0.26
MEDIUM GAS HEAT DEDUCTION	0.01	0.01	0.02	0.03	0.03	0.04	0.04

Gas Heat Static Pressure Deductions (in. wg) — 4 to 6 Ton Units

CFM	1200	1500	1800	2100	2400	2700	3000
LOW GAS HEAT DEDUCTION	0.02	0.18	0.32	0.44	0.53	0.59	0.63
MEDIUM GAS HEAT DEDUCTION	0.03	0.10	0.17	0.23	0.29	0.36	0.42
HIGH GAS HEAT DEDUCTION	0.01	0.05	0.08	0.12	0.15	0.18	0.20

Gas Heat Static Pressure Deductions (in. wg) for 48FE Ultra Low NOx — 3 Ton Units

CFM	900	1000	1100	1200	1300	1400	1500
LOW GAS HEAT DEDUCTION	0.63	0.58	0.53	0.47	0.40	0.33	0.26
MEDIUM GAS HEAT DEDUCTION	0.00	0.00	0.00	0.01	0.02	0.03	0.05

Gas Heat Static Pressure Deductions (in. wg) for 48FE Ultra Low NOx — 4 to 5 Ton Units

CFM	1200	1500	1800	2100	2400	2700	3000
LOW GAS HEAT DEDUCTION	0.02	0.18	0.32	0.44	0.53	0.59	0.63
MEDIUM GAS HEAT DEDUCTION	0.01	0.05	0.08	0.12	0.15	0.18	0.20

50FE 04-07 Field-Installed Accessory Electric Heater Data

50FE UNIT SIZE	VOLTAGE	HEATER MODEL NUMBER[a]	NUMBER OF STAGES
04	208/230	CRHEATER323A00	1
		CRHEATER324A00	1
		CRHEATER325A00	1
		CRHEATER326A00	1
		CRHEATER327A00	2
		CRHEATER328A00	1
	460	CRHEATER333A00	1
		CRHEATER334A00	1
		CRHEATER335A00	1
		CRHEATER336A00	1
	575	CRHEATER339A00	1
		CRHEATER340A00	1
05	208/230	CRHEATER323A00	1
		CRHEATER324A00	1
		CRHEATER325A00	1
		CRHEATER327A00	2
		CRHEATER328A00	1
		CRHEATER329A00	2
		CRHEATER330A00[b]	2
		CRHEATER331A00[c]	2
	460	CRHEATER333A00	1
		CRHEATER335A00	1
		CRHEATER336A00	1
		CRHEATER337A00	2
	575	CRHEATER339A00	1
		CRHEATER340A00	1
06	208/230	CRHEATER324A00	1
		CRHEATER325A00	1
		CRHEATER326A00	1
		CRHEATER327A00	2
		CRHEATER328A00	1
		CRHEATER329A00	2
		CRHEATER331A00	2
		CRHEATER332A00	2
	460	CRHEATER333A00	1
		CRHEATER335A00	1
		CRHEATER336A00	1
		CRHEATER337A00	2
		CRHEATER338A00	2
	575	CRHEATER340A00	1
		CRHEATER341A00	2
07	208/230	CRHEATER324A00	1
		CRHEATER326A00	1
		CRHEATER328A00	1
		CRHEATER331A00	2
		CRHEATER332A00	2
	460	CRHEATER333A00	1
		CRHEATER335A00	1
		CRHEATER336A00	1
		CRHEATER337A00	2
		CRHEATER338A00	2
	575	CRHEATER340A00	1
		CRHEATER341A00	2

NOTE(S):

a. Check heater nameplate for model number.
b. Do not use with size 05 horizontal supply duct configuration units.
c. Do not use with size 05 vertical supply duct configuration units.

Economizer Barometric Relief and Static Pressure

Horizontal Economizer Barometric Relief

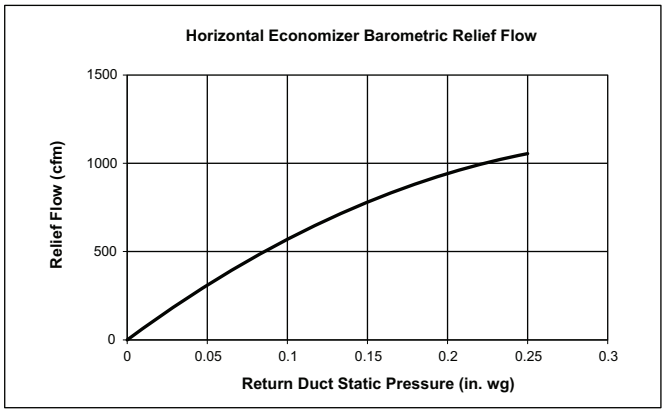

Vertical Economizer Barometric Relief

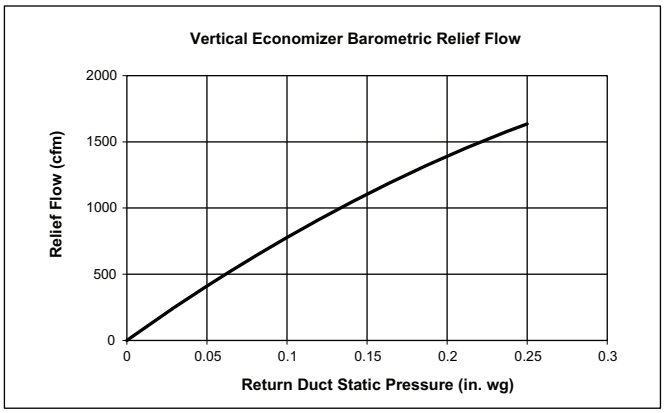

Horizontal Economizer Damper Leakage

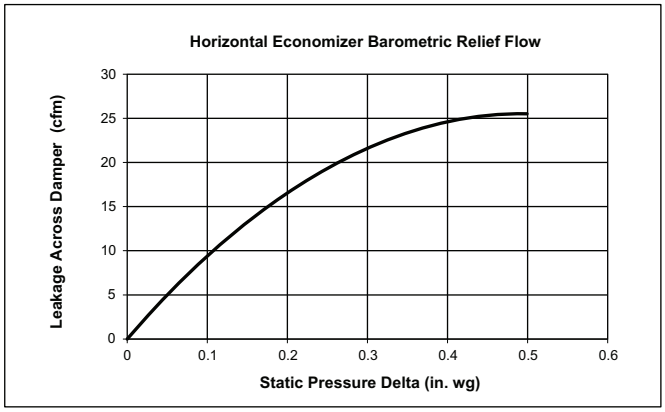

Vertical Economizer Damper Leakage

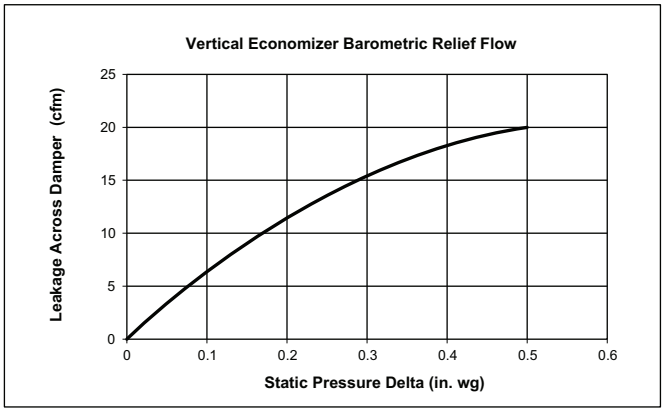

Humidi-MiZer® Coil Pressure Drops

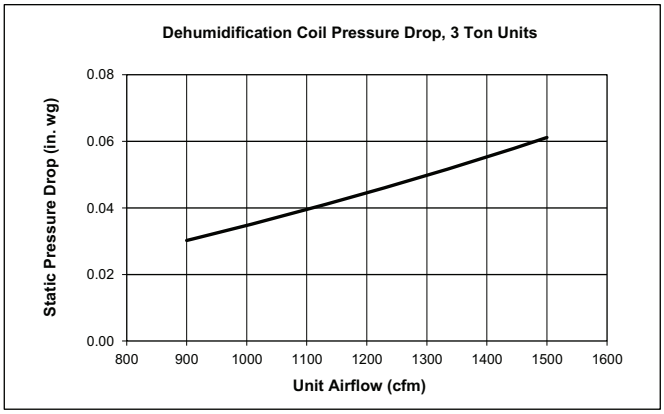

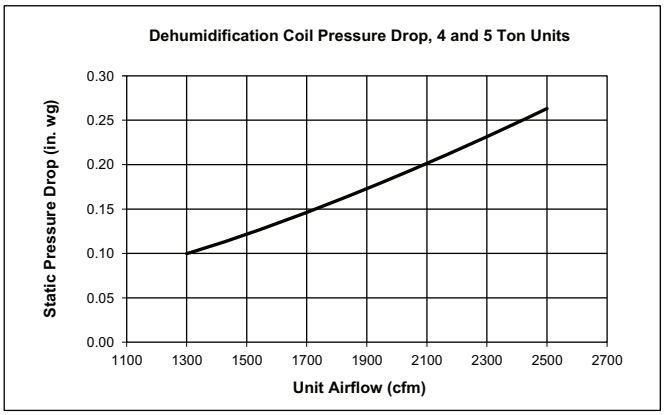

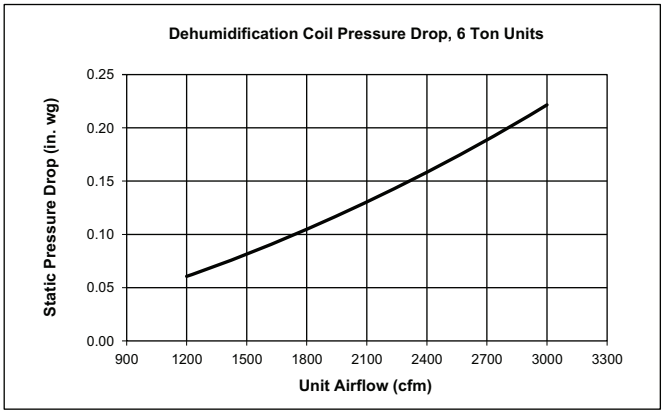

MERV-13 filters pressure drop

NOTE: For factory-installed MERV-13 filters, no additional pressure drop adjustments are necessary. The standard fan tables accommodate usage.

General Fan Performance Notes

1. Interpolation is permissible. Do not extrapolate.
2. External static pressure is the static pressure difference between the return duct and the supply duct plus the static pressure caused by any FIOPs or accessories.
3. Tabular data accounts for pressure loss due to clean filters, unit casing, wet coils, and highest gas heat exchanger (when gas heat unit).
4. Factory options and accessories may effect static pressure losses. Gas heat unit fan tables assume highest gas heat models; for fan selections with low or medium heat models, the user must deduct low and medium heat static pressures. Selection software is available, through your salesperson, to help you select the best motor/drive combination for your application.
5. The fan performance tables offer motor/drive recommendations. In cases when 2 motor/drive combinations would work, Carrier recommends the lower horsepower option.
6. Fan tables for 48FE units include highest gas heat. Utilize static pressure deduction tables on page 40 for lower gas heat capacities.
7. For information on the electrical properties of Carrier motors, please see the Electrical information section of this book.
8. For more information on the performance limits of Carrier motors, see the application data section of this book.
9. The EPACT (Energy Policy Act of 1992) regulates energy requirements for specific types of indoor fan motors. Motors regulated by EPACT include any general purpose, T-frame (3-digit, 143 and larger), single-speed, foot mounted, polyphase, squirrel cage induction motors of NEMA (National Electrical Manufacturers Association) design A and B, manufactured for use in the United States. Ranging from 1 to 200 Hp, these continuous-duty motors operate on 230 and 460 volt, 60 Hz power. If a motor does not fit into these specifications, the motor does not have to be replaced by an EPACT compliant energy-efficient motor. Variable-speed motors are exempt from EPACT compliance requirements.

48FEEA04 Single Phase — 3 Ton Vertical Supply (rpm - bhp)

CFM	AVAILABLE EXTERNAL STATIC PRESSURE (in. wg)									
	0.2		0.4		0.6		0.8		1.0	
	rpm	bhp	rpm	bhp	rpm	bhp	rpm	bhp	rpm	bhp
900	1112	0.10	1341	0.17	1530	0.25	1696	0.34	1845	0.44
975	1162	0.11	1385	0.19	1571	0.27	1733	0.36	1881	0.46
1050	1213	0.12	1431	0.20	1613	0.29	1772	0.39	1917	0.49
1125	1265	0.14	1477	0.22	1656	0.32	1813	0.41	1956	0.52
1200	1319	0.16	1525	0.25	1700	0.34	1855	0.44	1996	0.55
1275	1374	0.18	1573	0.27	1746	0.37	1898	0.48	2037	0.59
1350	1430	0.20	1623	0.30	1792	0.40	1942	0.51	2079	0.63
1425	1487	0.23	1674	0.33	1839	0.43	1987	0.55	2122	0.67
1500	1545	0.26	1725	0.36	1887	0.47	2032	0.58	2165	0.71

CFM	AVAILABLE EXTERNAL STATIC PRESSURE (in. wg)									
	1.2		1.4		1.6		1.8		2.0	
	rpm	bhp	rpm	bhp	rpm	bhp	rpm	bhp	rpm	bhp
900	1983	0.54	2111	0.66	2231	0.77	2344	0.90	2452	1.03
975	2016	0.57	2143	0.69	2262	0.81	2375	0.93	2482	1.06
1050	2051	0.60	2177	0.72	2294	0.84	2406	0.97	—	—
1125	2088	0.63	2211	0.75	2328	0.88	2438	1.01	—	—
1200	2126	0.67	2248	0.79	2363	0.92	2472	1.05	—	—
1275	2165	0.71	2285	0.83	2399	0.96	—	—	—	—
1350	2205	0.75	2324	0.87	2437	1.01	—	—	—	—
1425	2247	0.79	2364	0.92	2475	1.06	—	—	—	—
1500	2289	0.84	2405	0.97	—	—	—	—	—	—

Standard/Medium Static 1112-2190 rpm, 0.71 maximum bhp

High Static 1112-2490 rpm, 1.07 maximum bhp

48FEEA04 Single Phase — Standard/Medium Static — 3 Ton Vertical Supply (rpm - vdc)

CFM	AVAILABLE EXTERNAL STATIC PRESSURE (in. wg)									
	0.2		0.4		0.6		0.8		1.0	
	rpm	vdc	rpm	vdc	rpm	vdc	rpm	vdc	rpm	vdc
900	1112	5.1	1341	6.1	1530	7.0	1696	7.7	1845	8.4
975	1162	5.3	1385	6.3	1571	7.2	1733	7.9	1881	8.6
1050	1213	5.5	1431	6.5	1613	7.4	1772	8.1	1917	8.8
1125	1265	5.8	1477	6.7	1656	7.6	1813	8.3	1956	8.9
1200	1319	6.0	1525	7.0	1700	7.8	1855	8.5	1996	9.1
1275	1374	6.3	1573	7.2	1746	8.0	1898	8.7	2037	9.3
1350	1430	6.5	1623	7.4	1792	8.2	1942	8.9	2079	9.5
1425	1487	6.8	1674	7.6	1839	8.4	1987	9.1	2122	9.7
1500	1545	7.1	1725	7.9	1887	8.6	2032	9.3	2165	9.9

CFM	AVAILABLE EXTERNAL STATIC PRESSURE (in. wg)									
	1.2		1.4		1.6		1.8		2.0	
	rpm	vdc	rpm	vdc	rpm	vdc	rpm	vdc	rpm	vdc
900	1983	9.1	2111	9.6	—	—	—	—	—	—
975	2016	9.2	2143	9.8	—	—	—	—	—	—
1050	2051	9.4	—	—	—	—	—	—	—	—
1125	2088	9.5	—	—	—	—	—	—	—	—
1200	2126	9.7	—	—	—	—	—	—	—	—
1275	2165	9.9	—	—	—	—	—	—	—	—
1350	—	—	—	—	—	—	—	—	—	—
1425	—	—	—	—	—	—	—	—	—	—
1500	—	—	—	—	—	—	—	—	—	—

Standard/Medium Static 1112-2190 rpm

Fan data (cont)

48FEEA04 Single Phase — High Static — 3 Ton Vertical Supply (rpm - vdc)

CFM	AVAILABLE EXTERNAL STATIC PRESSURE (in. wg)									
	0.2		0.4		0.6		0.8		1.0	
	rpm	vdc	rpm	vdc	rpm	vdc	rpm	vdc	rpm	vdc
900	1112	4.5	1341	5.4	1530	6.1	1696	6.8	1845	7.4
975	1162	4.7	1385	5.6	1571	6.3	1733	7.0	1881	7.6
1050	1213	4.9	1431	5.7	1613	6.5	1772	7.1	1917	7.7
1125	1265	5.1	1477	5.9	1656	6.7	1813	7.3	1956	7.9
1200	1319	5.3	1525	6.1	1700	6.8	1855	7.4	1996	8.0
1275	1374	5.5	1573	6.3	1746	7.0	1898	7.6	2037	8.2
1350	1430	5.7	1623	6.5	1792	7.2	1942	7.8	2079	8.3
1425	1487	6.0	1674	6.7	1839	7.4	1987	8.0	2122	8.5
1500	1545	6.2	1725	6.9	1887	7.6	2032	8.2	2165	8.7

CFM	AVAILABLE EXTERNAL STATIC PRESSURE (in. wg)									
	1.2		1.4		1.6		1.8		2.0	
	rpm	vdc	rpm	vdc	rpm	vdc	rpm	vdc	rpm	vdc
900	1983	8.0	2111	8.5	2231	9.0	2344	9.4	2452	9.8
975	2016	8.1	2143	8.6	2262	9.1	2375	9.5	2482	10.0
1050	2051	8.2	2177	8.7	2294	9.2	2406	9.7	—	—
1125	2088	8.4	2211	8.9	2328	9.3	2438	9.8	—	—
1200	2126	8.5	2248	9.0	2363	9.5	2472	9.9	—	—
1275	2165	8.7	2285	9.2	2399	9.6	—	—	—	—
1350	2205	8.9	2324	9.3	2437	9.8	—	—	—	—
1425	2247	9.0	2364	9.5	2475	9.9	—	—	—	—
1500	2289	9.2	2405	9.7	—	—	—	—	—	—

High Static 1112-2490 rpm

48FEEA04 Three Phase — 3 Ton Vertical Supply (rpm - bhp)

CFM	AVAILABLE EXTERNAL STATIC PRESSURE (in. wg)									
	0.2		0.4		0.6		0.8		1.0	
	rpm	bhp	rpm	bhp	rpm	bhp	rpm	bhp	rpm	bhp
900	1112	0.10	1341	0.17	1530	0.25	1696	0.34	1845	0.44
975	1162	0.11	1385	0.19	1571	0.27	1733	0.36	1881	0.46
1050	1213	0.12	1431	0.20	1613	0.29	1772	0.39	1917	0.49
1125	1265	0.14	1477	0.22	1656	0.32	1813	0.41	1956	0.52
1200	1319	0.16	1525	0.25	1700	0.34	1855	0.44	1996	0.55
1275	1374	0.18	1573	0.27	1746	0.37	1898	0.48	2037	0.59
1350	1430	0.20	1623	0.30	1792	0.40	1942	0.51	2079	0.63
1425	1487	0.23	1674	0.33	1839	0.43	1987	0.55	2122	0.67
1500	1545	0.26	1725	0.36	1887	0.47	2032	0.58	2165	0.71

CFM	AVAILABLE EXTERNAL STATIC PRESSURE (in. wg)									
	1.2		1.4		1.6		1.8		2.0	
	rpm	bhp	rpm	bhp	rpm	bhp	rpm	bhp	rpm	bhp
900	1983	0.54	2111	0.66	2231	0.77	2344	0.90	2452	1.03
975	2016	0.57	2143	0.69	2262	0.81	2375	0.93	2482	1.06
1050	2051	0.60	2177	0.72	2294	0.84	2406	0.97	—	—
1125	2088	0.63	2211	0.75	2328	0.88	2438	1.01	—	—
1200	2126	0.67	2248	0.79	2363	0.92	2472	1.05	—	—
1275	2165	0.71	2285	0.83	2399	0.96	—	—	—	—
1350	2205	0.75	2324	0.87	2437	1.01	—	—	—	—
1425	2247	0.79	2364	0.92	2475	1.06	—	—	—	—
1500	2289	0.84	2405	0.97	—	—	—	—	—	—

Standard/Medium Static 1112-2190 rpm, 0.71 maximum bhp

High Static 1112-2490 rpm, 1.07 maximum bhp

48FEEA04 Three Phase — Standard/Medium Static — 3 Ton Vertical Supply (rpm - vdc)

CFM	AVAILABLE EXTERNAL STATIC PRESSURE (in. wg)									
	0.2		0.4		0.6		0.8		1.0	
	rpm	vdc	rpm	vdc	rpm	vdc	rpm	vdc	rpm	vdc
900	1112	5.1	1341	6.1	1530	7.0	1696	7.7	1845	8.4
975	1162	5.3	1385	6.3	1571	7.2	1733	7.9	1881	8.6
1050	1213	5.5	1431	6.5	1613	7.4	1772	8.1	1917	8.8
1125	1265	5.8	1477	6.7	1656	7.6	1813	8.3	1956	8.9
1200	1319	6.0	1525	7.0	1700	7.8	1855	8.5	1996	9.1
1275	1374	6.3	1573	7.2	1746	8.0	1898	8.7	2037	9.3
1350	1430	6.5	1623	7.4	1792	8.2	1942	8.9	2079	9.5
1425	1487	6.8	1674	7.6	1839	8.4	1987	9.1	2122	9.7
1500	1545	7.1	1725	7.9	1887	8.6	2032	9.3	2165	9.9

CFM	AVAILABLE EXTERNAL STATIC PRESSURE (in. wg)									
	1.2		1.4		1.6		1.8		2.0	
	rpm	vdc	rpm	vdc	rpm	vdc	rpm	vdc	rpm	vdc
900	1983	9.1	2111	9.6	—	—	—	—	—	—
975	2016	9.2	2143	9.8	—	—	—	—	—	—
1050	2051	9.4	—	—	—	—	—	—	—	—
1125	2088	9.5	—	—	—	—	—	—	—	—
1200	2126	9.7	—	—	—	—	—	—	—	—
1275	2165	9.9	—	—	—	—	—	—	—	—
1350	—	—	—	—	—	—	—	—	—	—
1425	—	—	—	—	—	—	—	—	—	—
1500	—	—	—	—	—	—	—	—	—	—

Standard/Medium Static 1112-2190 rpm

Fan data (cont)

48FEEA04 Three Phase — High Static — 3 Ton Vertical Supply (rpm - vdc)

CFM	AVAILABLE EXTERNAL STATIC PRESSURE (in. wg)									
	0.2		0.4		0.6		0.8		1.0	
	rpm	vdc	rpm	vdc	rpm	vdc	rpm	vdc	rpm	vdc
900	1112	4.5	1341	5.4	1530	6.1	1696	6.8	1845	7.4
975	1162	4.7	1385	5.6	1571	6.3	1733	7.0	1881	7.6
1050	1213	4.9	1431	5.7	1613	6.5	1772	7.1	1917	7.7
1125	1265	5.1	1477	5.9	1656	6.7	1813	7.3	1956	7.9
1200	1319	5.3	1525	6.1	1700	6.8	1855	7.4	1996	8.0
1275	1374	5.5	1573	6.3	1746	7.0	1898	7.6	2037	8.2
1350	1430	5.7	1623	6.5	1792	7.2	1942	7.8	2079	8.3
1425	1487	6.0	1674	6.7	1839	7.4	1987	8.0	2122	8.5
1500	1545	6.2	1725	6.9	1887	7.6	2032	8.2	2165	8.7

CFM	AVAILABLE EXTERNAL STATIC PRESSURE (in. wg)									
	1.2		1.4		1.6		1.8		2.0	
	rpm	vdc	rpm	vdc	rpm	vdc	rpm	vdc	rpm	vdc
900	1983	8.0	2111	8.5	2231	9.0	2344	9.4	2452	9.8
975	2016	8.1	2143	8.6	2262	9.1	2375	9.5	2482	10.0
1050	2051	8.2	2177	8.7	2294	9.2	2406	9.7	—	—
1125	2088	8.4	2211	8.9	2328	9.3	2438	9.8	—	—
1200	2126	8.5	2248	9.0	2363	9.5	2472	9.9	—	—
1275	2165	8.7	2285	9.2	2399	9.6	—	—	—	—
1350	2205	8.9	2324	9.3	2437	9.8	—	—	—	—
1425	2247	9.0	2364	9.5	2475	9.9	—	—	—	—
1500	2289	9.2	2405	9.7	—	—	—	—	—	—

High Static 1112-2490 rpm

Fan data (cont)

48FEFA05 Single Phase — 4 Ton Vertical Supply (rpm - bhp)

CFM	AVAILABLE EXTERNAL STATIC PRESSURE (in. wg)									
	0.2		0.4		0.6		0.8		1.0	
	rpm	bhp	rpm	bhp	rpm	bhp	rpm	bhp	rpm	bhp
1200	1262	0.21	1452	0.33	1614	0.45	1757	0.58	1888	0.72
1300	1333	0.25	1516	0.37	1674	0.50	1813	0.63	1942	0.78
1400	1405	0.29	1583	0.42	1735	0.55	1872	0.70	1997	0.84
1500	1478	0.34	1650	0.48	1798	0.62	1932	0.76	2054	0.92
1600	1552	0.40	1718	0.54	1863	0.68	1993	0.84	2114	1.00
1700	1627	0.46	1787	0.60	1928	0.76	2057	0.92	2174	1.09
1800	1704	0.52	1857	0.68	1995	0.84	2121	1.01	2236	1.18
1900	1781	0.60	1929	0.76	2063	0.93	2185	1.10	2299	1.28
2000	1859	0.68	2001	0.85	2132	1.02	2252	1.21	2363	1.39

CFM	AVAILABLE EXTERNAL STATIC PRESSURE (in. wg)									
	1.2		1.4		1.6		1.8		2.0	
	rpm	bhp	rpm	bhp	rpm	bhp	rpm	bhp	rpm	bhp
1200	2011	0.87	2126	1.02	2236	1.19	2341	1.37	2442	1.55
1300	2061	0.93	2174	1.09	2281	1.26	2384	1.44	—	—
1400	2114	1.00	2224	1.17	2329	1.34	2429	1.52	—	—
1500	2169	1.08	2277	1.25	2379	1.43	—	—	—	—
1600	2226	1.17	2331	1.34	2432	1.52	—	—	—	—
1700	2284	1.26	2388	1.44	—	—	—	—	—	—
1800	2344	1.36	2446	1.55	—	—	—	—	—	—
1900	2405	1.47	—	—	—	—	—	—	—	—
2000	—	—	—	—	—	—	—	—	—	—

Standard/Medium Static 1262-2170 rpm, 1.06 maximum bhp

High Static 1262-2460 rpm, 1.53 maximum bhp

48FEFA05 Single Phase — Standard/Medium Static — 4 Ton Vertical Supply (rpm - vdc)

CFM	AVAILABLE EXTERNAL STATIC PRESSURE (in. wg)									
	0.2		0.4		0.6		0.8		1.0	
	rpm	vdc	rpm	vdc	rpm	vdc	rpm	vdc	rpm	vdc
1200	1262	5.8	1452	6.7	1614	7.4	1757	8.1	1888	8.7
1300	1333	6.1	1516	7.0	1674	7.7	1813	8.4	1942	8.9
1400	1405	6.5	1583	7.3	1735	8.0	1872	8.6	1997	9.2
1500	1478	6.8	1650	7.6	1798	8.3	1932	8.9	2054	9.5
1600	1552	7.2	1718	7.9	1863	8.6	1993	9.2	2114	9.7
1700	1627	7.5	1787	8.2	1928	8.9	2057	9.5	—	—
1800	1704	7.9	1857	8.6	1995	9.2	2121	9.8	—	—
1900	1781	8.2	1929	8.9	2063	9.5	—	—	—	—
2000	1859	8.6	2001	9.2	2132	9.8	—	—	—	—

CFM	AVAILABLE EXTERNAL STATIC PRESSURE (in. wg)									
	1.2		1.4		1.6		1.8		2.0	
	rpm	vdc	rpm	vdc	rpm	vdc	rpm	vdc	rpm	vdc
1200	2011	9.3	2126	9.8	—	—	—	—	—	—
1300	2061	9.5	—	—	—	—	—	—	—	—
1400	2114	9.7	—	—	—	—	—	—	—	—
1500	—	—	—	—	—	—	—	—	—	—
1600	—	—	—	—	—	—	—	—	—	—
1700	—	—	—	—	—	—	—	—	—	—
1800	—	—	—	—	—	—	—	—	—	—
1900	—	—	—	—	—	—	—	—	—	—
2000	—	—	—	—	—	—	—	—	—	—

Standard/Medium Static 1262-2170 rpm

48FEFA05 Single Phase — High Static — 4 Ton Vertical Supply (rpm - vdc)

CFM	AVAILABLE EXTERNAL STATIC PRESSURE (in. wg)									
	0.2		0.4		0.6		0.8		1.0	
	rpm	vdc	rpm	vdc	rpm	vdc	rpm	vdc	rpm	vdc
1200	1262	5.1	1452	5.9	1614	6.6	1757	7.1	1888	7.7
1300	1333	5.4	1516	6.2	1674	6.8	1813	7.4	1942	7.9
1400	1405	5.7	1583	6.4	1735	7.1	1872	7.6	1997	8.1
1500	1478	6.0	1650	6.7	1798	7.3	1932	7.9	2054	8.3
1600	1552	6.3	1718	7.0	1863	7.6	1993	8.1	2114	8.6
1700	1627	6.6	1787	7.3	1928	7.8	2057	8.4	2174	8.8
1800	1704	6.9	1857	7.5	1995	8.1	2121	8.6	2236	9.1
1900	1781	7.2	1929	7.8	2063	8.4	2185	8.9	2299	9.3
2000	1859	7.6	2001	8.1	2132	8.7	2252	9.2	2363	9.6

CFM	AVAILABLE EXTERNAL STATIC PRESSURE (in. wg)									
	1.2		1.4		1.6		1.8		2.0	
	rpm	vdc	rpm	vdc	rpm	vdc	rpm	vdc	rpm	vdc
1200	2011	8.2	2126	8.6	2236	9.1	2341	9.5	2442	9.9
1300	2061	8.4	2174	8.8	2281	9.3	2384	9.7	—	—
1400	2114	8.6	2224	9.0	2329	9.5	2429	9.9	—	—
1500	2169	8.8	2277	9.3	2379	9.7	—	—	—	—
1600	2226	9.0	2331	9.5	2432	9.9	—	—	—	—
1700	2284	9.3	2388	9.7	—	—	—	—	—	—
1800	2344	9.5	2446	9.9	—	—	—	—	—	—
1900	2405	9.8	—	—	—	—	—	—	—	—
2000	—	—	—	—	—	—	—	—	—	—

High Static 1262-2460 rpm

Fan data (cont)

48FEFA05 Three Phase — 4 Ton Vertical Supply (rpm - bhp)

CFM	AVAILABLE EXTERNAL STATIC PRESSURE (in. wg)									
	0.2		0.4		0.6		0.8		1.0	
	rpm	bhp	rpm	bhp	rpm	bhp	rpm	bhp	rpm	bhp
1200	1262	0.21	1453	0.33	1614	0.45	1757	0.58	1888	0.72
1300	1333	0.25	1517	0.37	1674	0.50	1814	0.63	1942	0.78
1400	1405	0.29	1583	0.42	1736	0.56	1872	0.70	1998	0.85
1500	1478	0.34	1650	0.48	1799	0.62	1932	0.76	2055	0.92
1600	1553	0.40	1718	0.54	1863	0.68	1994	0.84	2114	1.00
1700	1628	0.46	1787	0.60	1929	0.76	2057	0.92	2174	1.09
1800	1704	0.52	1858	0.68	1995	0.84	2121	1.01	2236	1.18
1900	1781	0.60	1929	0.76	2063	0.93	2186	1.10	2299	1.28
2000	1859	0.68	2001	0.85	2132	1.02	2252	1.21	2363	1.39

CFM	AVAILABLE EXTERNAL STATIC PRESSURE (in. wg)									
	1.2		1.4		1.6		1.8		2.0	
	rpm	bhp	rpm	bhp	rpm	bhp	rpm	bhp	rpm	bhp
1200	2011	0.87	2126	1.02	2236	1.19	2341	1.37	2442	1.55
1300	2061	0.93	2174	1.09	2281	1.26	2383	1.44	2482	1.62
1400	2114	1.00	2224	1.17	2329	1.34	2429	1.52	2526	1.71
1500	2169	1.08	2277	1.25	2379	1.43	2478	1.61	2572	1.80
1600	2226	1.17	2332	1.34	2432	1.52	2528	1.71	2621	1.91
1700	2284	1.26	2388	1.44	2487	1.63	2581	1.82	—	—
1800	2344	1.36	2446	1.55	2543	1.74	2636	1.94	—	—
1900	2405	1.47	2505	1.66	2600	1.86	—	—	—	—
2000	2467	1.59	2566	1.79	2659	1.99	—	—	—	—

Standard/Medium Static 1262-2170 rpm, 1.06 maximum bhp

High Static 1262-2660 rpm, 1.96 maximum bhp

48FEFA05 Three Phase — Standard/Medium Static — 4 Ton Vertical Supply (rpm - vdc)

CFM	AVAILABLE EXTERNAL STATIC PRESSURE (in. wg)									
	0.2		0.4		0.6		0.8		1.0	
	rpm	vdc	rpm	vdc	rpm	vdc	rpm	vdc	rpm	vdc
1200	1262	5.8	1453	6.7	1614	7.4	1757	8.1	1888	8.7
1300	1333	6.1	1517	7.0	1674	7.7	1814	8.4	1942	8.9
1400	1405	6.5	1583	7.3	1736	8.0	1872	8.6	1998	9.2
1500	1478	6.8	1650	7.6	1799	8.3	1932	8.9	2055	9.5
1600	1553	7.2	1718	7.9	1863	8.6	1994	9.2	2114	9.7
1700	1628	7.5	1787	8.2	1929	8.9	2057	9.5	—	—
1800	1704	7.9	1858	8.6	1995	9.2	2121	9.8	—	—
1900	1781	8.2	1929	8.9	2063	9.5	—	—	—	—
2000	1859	8.6	2001	9.2	2132	9.8	—	—	—	—

CFM	AVAILABLE EXTERNAL STATIC PRESSURE (in. wg)									
	1.2		1.4		1.6		1.8		2.0	
	rpm	vdc	rpm	vdc	rpm	vdc	rpm	vdc	rpm	vdc
1200	2011	9.3	2126	9.8	—	—	—	—	—	—
1300	2061	9.5	—	—	—	—	—	—	—	—
1400	2114	9.7	—	—	—	—	—	—	—	—
1500	—	—	—	—	—	—	—	—	—	—
1600	—	—	—	—	—	—	—	—	—	—
1700	—	—	—	—	—	—	—	—	—	—
1800	—	—	—	—	—	—	—	—	—	—
1900	—	—	—	—	—	—	—	—	—	—
2000	—	—	—	—	—	—	—	—	—	—

Standard/Medium Static 1262-2170 rpm

Fan data (cont)

48FEFA05 Three Phase — High Static — 4 Ton Vertical Supply (rpm - vdc)

CFM	AVAILABLE EXTERNAL STATIC PRESSURE (in. wg)									
	0.2		0.4		0.6		0.8		1.0	
	rpm	vdc	rpm	vdc	rpm	vdc	rpm	vdc	rpm	vdc
1200	1262	4.7	1453	5.5	1614	6.1	1757	6.6	1888	7.1
1300	1333	5.0	1517	5.7	1674	6.3	1814	6.8	1942	7.3
1400	1405	5.3	1583	6.0	1736	6.5	1872	7.0	1998	7.5
1500	1478	5.6	1650	6.2	1799	6.8	1932	7.3	2055	7.7
1600	1553	5.8	1718	6.5	1863	7.0	1994	7.5	2114	7.9
1700	1628	6.1	1787	6.7	1929	7.3	2057	7.7	2174	8.2
1800	1704	6.4	1858	7.0	1995	7.5	2121	8.0	2236	8.4
1900	1781	6.7	1929	7.3	2063	7.8	2186	8.2	2299	8.6
2000	1859	7.0	2001	7.5	2132	8.0	2252	8.5	2363	8.9

CFM	AVAILABLE EXTERNAL STATIC PRESSURE (in. wg)									
	1.2		1.4		1.6		1.8		2.0	
	rpm	vdc	rpm	vdc	rpm	vdc	rpm	vdc	rpm	vdc
1200	2011	7.6	2126	8.0	2236	8.4	2341	8.8	2442	9.2
1300	2061	7.7	2174	8.2	2281	8.6	2383	9.0	2482	9.3
1400	2114	7.9	2224	8.4	2329	8.8	2429	9.1	2526	9.5
1500	2169	8.2	2277	8.6	2379	8.9	2478	9.3	2572	9.7
1600	2226	8.4	2332	8.8	2432	9.1	2528	9.5	2621	9.9
1700	2284	8.6	2388	9.0	2487	9.3	2581	9.7	—	—
1800	2344	8.8	2446	9.2	2543	9.6	2636	9.9	—	—
1900	2405	9.0	2505	9.4	2600	9.8	—	—	—	—
2000	2467	9.3	2566	9.6	2659	10.0	—	—	—	—

High Static 1262-2660 rpm

48FEFA06 Single Phase — 5 Ton Vertical Supply (rpm - bhp)

CFM	AVAILABLE EXTERNAL STATIC PRESSURE (in. wg)									
	0.2		0.4		0.6		0.8		1.0	
	rpm	bhp	rpm	bhp	rpm	bhp	rpm	bhp	rpm	bhp
1500	1478	0.34	1650	0.48	1799	0.62	1932	0.76	2054	0.92
1625	1571	0.41	1735	0.55	1879	0.70	2009	0.86	2129	1.02
1750	1666	0.49	1822	0.64	1962	0.80	2088	0.96	2205	1.13
1875	1762	0.58	1911	0.74	2046	0.91	2169	1.08	2283	1.26
2000	1859	0.68	2001	0.85	2132	1.02	2252	1.21	2363	1.39
2125	1957	0.79	2093	0.97	2218	1.15	2335	1.34	2444	1.54
2250	2056	0.92	2186	1.10	2307	1.30	2420	1.50	2527	1.70
2375	2156	1.06	2280	1.25	2396	1.45	2507	1.66	2611	1.88
2500	2256	1.21	2375	1.41	2487	1.62	2594	1.84	—	—

CFM	AVAILABLE EXTERNAL STATIC PRESSURE (in. wg)									
	1.2		1.4		1.6		1.8		2.0	
	rpm	bhp	rpm	bhp	rpm	bhp	rpm	bhp	rpm	bhp
1500	2169	1.08	2277	1.25	2379	1.43	2478	1.61	2572	1.80
1625	2240	1.19	2345	1.37	2445	1.55	2541	1.74	2634	1.93
1750	2314	1.31	2417	1.49	2514	1.68	2608	1.88	—	—
1875	2390	1.44	2490	1.63	2586	1.83	—	—	—	—
2000	2467	1.59	2566	1.79	2660	1.99	—	—	—	—
2125	2546	1.74	2643	1.95	—	—	—	—	—	—
2250	2627	1.91	—	—	—	—	—	—	—	—
2375	—	—	—	—	—	—	—	—	—	—
2500	—	—	—	—	—	—	—	—	—	—

Standard/Medium Static 1478-2390 rpm, 1.44 maximum bhp

High Static 1478-2660 rpm, 1.96 maximum bhp

48FEFA06 Single Phase — Standard/Medium Static — 5 Ton Vertical Supply (rpm - vdc)

CFM	AVAILABLE EXTERNAL STATIC PRESSURE (in. wg)									
	0.2		0.4		0.6		0.8		1.0	
	rpm	vdc	rpm	vdc	rpm	vdc	rpm	vdc	rpm	vdc
1500	1478	6.2	1650	6.9	1799	7.5	1932	8.1	2055	8.6
1625	1571	6.6	1735	7.3	1879	7.9	2009	8.4	2129	8.9
1750	1666	7.0	1822	7.6	1962	8.2	2088	8.7	2205	9.2
1875	1761	7.4	1910	8.0	2046	8.6	2169	9.1	2283	9.6
2000	1859	7.8	2001	8.4	2132	8.9	2252	9.4	2363	9.9
2125	1957	8.2	2093	8.8	2218	9.3	2335	9.8	—	—
2250	2056	8.6	2185	9.1	2307	9.7	—	—	—	—
2375	2155	9.0	2279	9.5	—	—	—	—	—	—
2500	2256	9.4	2374	9.9	—	—	—	—	—	—

CFM	AVAILABLE EXTERNAL STATIC PRESSURE (in. wg)									
	1.2		1.4		1.6		1.8		2.0	
	rpm	vdc	rpm	vdc	rpm	vdc	rpm	vdc	rpm	vdc
1500	2169	9.1	2277	9.5	2379	10.0	—	—	—	—
1625	2240	9.4	2345	9.8	—	—	—	—	—	—
1750	2314	9.7	—	—	—	—	—	—	—	—
1875	2389	10.0	—	—	—	—	—	—	—	—
2000	—	—	—	—	—	—	—	—	—	—
2125	—	—	—	—	—	—	—	—	—	—
2250	—	—	—	—	—	—	—	—	—	—
2375	—	—	—	—	—	—	—	—	—	—
2500	—	—	—	—	—	—	—	—	—	—

Standard/Medium Static 1478-2390 rpm

48FEFA06 Single Phase — High Static — 5 Ton Vertical Supply (rpm - vdc)

CFM	AVAILABLE EXTERNAL STATIC PRESSURE (in. wg)									
	0.2		0.4		0.6		0.8		1.0	
	rpm	vdc	rpm	vdc	rpm	vdc	rpm	vdc	rpm	vdc
1500	1478	5.6	1650	6.2	1799	6.8	1932	7.3	2054	7.7
1625	1571	5.9	1735	6.5	1879	7.1	2009	7.6	2129	8.0
1750	1666	6.3	1822	6.8	1962	7.4	2088	7.8	2205	8.3
1875	1762	6.6	1911	7.2	2046	7.7	2169	8.2	2283	8.6
2000	1859	7.0	2001	7.5	2132	8.0	2252	8.5	2363	8.9
2125	1957	7.4	2093	7.9	2218	8.3	2335	8.8	2444	9.2
2250	2056	7.7	2186	8.2	2307	8.7	2420	9.1	2527	9.5
2375	2156	8.1	2280	8.6	2396	9.0	2507	9.4	2611	9.8
2500	2256	8.5	2375	8.9	2487	9.3	2594	9.8	—	—

CFM	AVAILABLE EXTERNAL STATIC PRESSURE (in. wg)									
	1.2		1.4		1.6		1.8		2.0	
	rpm	vdc	rpm	vdc	rpm	vdc	rpm	vdc	rpm	vdc
1500	2169	8.2	2277	8.6	2379	8.9	2478	9.3	2572	9.7
1625	2240	8.4	2345	8.8	2445	9.2	2541	9.6	2634	9.9
1750	2314	8.7	2417	9.1	2514	9.5	2608	9.8	—	—
1875	2390	9.0	2490	9.4	2586	9.7	—	—	—	—
2000	2467	9.3	2566	9.6	2660	10.0	—	—	—	—
2125	2546	9.6	2643	9.9	—	—	—	—	—	—
2250	2627	9.9	—	—	—	—	—	—	—	—
2375	—	—	—	—	—	—	—	—	—	—
2500	—	—	—	—	—	—	—	—	—	—

High Static 1478-2660 rpm

48FEFA06 Three Phase — 5 Ton Vertical Supply (rpm - bhp)

CFM	AVAILABLE EXTERNAL STATIC PRESSURE (in. wg)									
	0.2		0.4		0.6		0.8		1.0	
	rpm	bhp	rpm	bhp	rpm	bhp	rpm	bhp	rpm	bhp
1500	1478	0.34	1650	0.48	1798	0.62	1932	0.76	2055	0.92
1625	1571	0.41	1735	0.55	1879	0.70	2009	0.86	2129	1.02
1750	1665	0.49	1822	0.64	1962	0.80	2088	0.96	2205	1.13
1875	1762	0.58	1911	0.74	2046	0.91	2169	1.08	2283	1.26
2000	1859	0.68	2001	0.85	2132	1.02	2252	1.21	2363	1.39
2125	1957	0.79	2093	0.97	2219	1.15	2335	1.34	2444	1.54
2250	2055	0.92	2185	1.10	2307	1.30	2420	1.50	2527	1.70
2375	2156	1.06	2279	1.25	2397	1.45	2507	1.66	2610	1.88
2500	2256	1.21	2374	1.41	2487	1.62	2594	1.84	2695	2.07

CFM	AVAILABLE EXTERNAL STATIC PRESSURE (in. wg)									
	1.2		1.4		1.6		1.8		2.0	
	rpm	bhp	rpm	bhp	rpm	bhp	rpm	bhp	rpm	bhp
1500	2169	1.08	2277	1.25	2379	1.43	2477	1.61	2572	1.80
1625	2240	1.19	2345	1.37	2445	1.55	2541	1.74	2633	1.93
1750	2314	1.31	2417	1.49	2514	1.68	2608	1.88	2698	2.08
1875	2389	1.44	2490	1.63	2586	1.83	2677	2.03	2766	2.24
2000	2467	1.59	2565	1.78	2659	1.99	2749	2.20	2836	2.41
2125	2546	1.74	2643	1.95	2734	2.16	2823	2.38	—	—
2250	2627	1.91	2721	2.13	2812	2.35	—	—	—	—
2375	2708	2.10	2801	2.32	—	—	—	—	—	—
2500	2791	2.30	—	—	—	—	—	—	—	—

Standard/Medium Static 1478-2390 rpm, 1.44 maximum bhp

High Static 1478-2836 rpm, 2.43 maximum bhp

48FEFA06 Three Phase — Standard/Medium Static — 5 Ton Vertical Supply (rpm - vdc)

CFM	AVAILABLE EXTERNAL STATIC PRESSURE (in. wg)									
	0.2		0.4		0.6		0.8		1.0	
	rpm	vdc	rpm	vdc	rpm	vdc	rpm	vdc	rpm	vdc
1500	1478	6.2	1650	6.9	1798	7.5	1932	8.1	2055	8.6
1625	1571	6.6	1735	7.3	1879	7.9	2009	8.4	2129	8.9
1750	1665	7.0	1822	7.6	1962	8.2	2088	8.7	2205	9.2
1875	1762	7.4	1911	8.0	2046	8.6	2169	9.1	2283	9.6
2000	1859	7.8	2001	8.4	2132	8.9	2252	9.4	2363	9.9
2125	1957	8.2	2093	8.8	2219	9.3	2335	9.8	—	—
2250	2055	8.6	2185	9.1	2307	9.7	—	—	—	—
2375	2156	9.0	2279	9.5	—	—	—	—	—	—
2500	2256	9.4	2374	9.9	—	—	—	—	—	—

CFM	AVAILABLE EXTERNAL STATIC PRESSURE (in. wg)									
	1.2		1.4		1.6		1.8		2.0	
	rpm	vdc	rpm	vdc	rpm	vdc	rpm	vdc	rpm	vdc
1500	2169	9.1	2277	9.5	2379	10.0	—	—	—	—
1625	2240	9.4	2345	9.8	—	—	—	—	—	—
1750	2314	9.7	—	—	—	—	—	—	—	—
1875	2389	10.0	—	—	—	—	—	—	—	—
2000	—	—	—	—	—	—	—	—	—	—
2125	—	—	—	—	—	—	—	—	—	—
2250	—	—	—	—	—	—	—	—	—	—
2375	—	—	—	—	—	—	—	—	—	—
2500	—	—	—	—	—	—	—	—	—	—

Standard/Medium Static 1478-2390 rpm

Fan data (cont)

48FEFA06 Three Phase — High Static — 5 Ton Vertical Supply (rpm - vdc)

CFM	AVAILABLE EXTERNAL STATIC PRESSURE (in. wg)									
	0.2		0.4		0.6		0.8		1.0	
	rpm	vdc	rpm	vdc	rpm	vdc	rpm	vdc	rpm	vdc
1500	1478	5.2	1650	5.8	1798	6.3	1932	6.8	2055	7.2
1625	1571	5.5	1735	6.1	1879	6.6	2009	7.1	2129	7.5
1750	1665	5.9	1822	6.4	1962	6.9	2088	7.4	2205	7.8
1875	1762	6.2	1911	6.7	2046	7.2	2169	7.6	2283	8.1
2000	1859	6.6	2001	7.1	2132	7.5	2252	7.9	2363	8.3
2125	1957	6.9	2093	7.4	2219	7.8	2335	8.2	2444	8.6
2250	2055	7.2	2185	7.7	2307	8.1	2420	8.5	2527	8.9
2375	2156	7.6	2279	8.0	2397	8.5	2507	8.8	2610	9.2
2500	2256	8.0	2374	8.4	2487	8.8	2594	9.1	2695	9.5

CFM	AVAILABLE EXTERNAL STATIC PRESSURE (in. wg)									
	1.2		1.4		1.6		1.8		2.0	
	rpm	vdc	rpm	vdc	rpm	vdc	rpm	vdc	rpm	vdc
1500	2169	7.6	2277	8.0	2379	8.4	2477	8.7	2572	9.1
1625	2240	7.9	2345	8.3	2445	8.6	2541	9.0	2633	9.3
1750	2314	8.2	2417	8.5	2514	8.9	2608	9.2	2698	9.5
1875	2389	8.4	2490	8.8	2586	9.1	2677	9.4	2766	9.8
2000	2467	8.7	2565	9.0	2659	9.4	2749	9.7	2836	10.0
2125	2546	9.0	2643	9.3	2734	9.6	2823	10.0	—	—
2250	2627	9.3	2721	9.6	2812	9.9	—	—	—	—
2375	2708	9.5	2801	9.9	—	—	—	—	—	—
2500	2791	9.8	—	—	—	—	—	—	—	—

High Static 1478-2836 rpm

48FEFM07 Three Phase — 6 Ton Vertical Supply (rpm - bhp)

CFM	AVAILABLE EXTERNAL STATIC PRESSURE (in. wg)									
	0.2		0.4		0.6		0.8		1.0	
	rpm	bhp	rpm	bhp	rpm	bhp	rpm	bhp	rpm	bhp
1800	1596	0.43	1749	0.56	1889	0.71	2015	0.86	2131	1.02
1950	1704	0.52	1847	0.67	1981	0.82	2104	0.98	2217	1.15
2100	1814	0.63	1948	0.78	2075	0.94	2194	1.12	2305	1.29
2250	1924	0.75	2050	0.91	2172	1.08	2286	1.26	2394	1.45
2400	2037	0.89	2155	1.06	2270	1.24	2381	1.43	2485	1.62
2550	2150	1.05	2261	1.22	2370	1.41	2476	1.61	2578	1.81
2700	2265	1.23	2368	1.40	2472	1.60	2574	1.80	2672	2.02
2850	2379	1.43	2477	1.61	2576	1.81	2674	2.02	2768	2.24
3000	2495	1.64	2587	1.83	2681	2.04	2775	2.26	—	—

CFM	AVAILABLE EXTERNAL STATIC PRESSURE (in. wg)									
	1.2		1.4		1.6		1.8		2.0	
	rpm	bhp	rpm	bhp	rpm	bhp	rpm	bhp	rpm	bhp
1800	2239	1.19	2340	1.35	2436	1.53	2528	1.71	2615	1.89
1950	2323	1.32	2422	1.50	2516	1.68	2605	1.87	2691	2.06
2100	2408	1.47	2505	1.66	2597	1.85	2685	2.04	2770	2.25
2250	2495	1.64	2590	1.84	2681	2.04	2767	2.24	—	—
2400	2584	1.82	2677	2.03	2766	2.24	—	—	—	—
2550	2674	2.02	2766	2.24	—	—	—	—	—	—
2700	2766	2.24	—	—	—	—	—	—	—	—
2850	—	—	—	—	—	—	—	—	—	—
3000	—	—	—	—	—	—	—	—	—	—

Standard/Medium Static 1596-2530 rpm, 1.76 maximum bhp

High Static 1596-2836 rpm, 2.43 maximum bhp

48FEFM07 Three Phase — Standard/Medium Static — 6 Ton Vertical Supply (rpm - vdc)

CFM	AVAILABLE EXTERNAL STATIC PRESSURE (in. wg)									
	0.2		0.4		0.6		0.8		1.0	
	rpm	vdc	rpm	vdc	rpm	vdc	rpm	vdc	rpm	vdc
1800	1596	6.3	1749	6.9	1889	7.5	2015	8.0	2131	8.4
1950	1704	6.7	1847	7.3	1981	7.8	2104	8.3	2217	8.8
2100	1814	7.2	1948	7.7	2075	8.2	2194	8.7	2305	9.1
2250	1925	7.6	2050	8.1	2172	8.6	2286	9.0	2394	9.5
2400	2037	8.1	2154	8.5	2270	9.0	2381	9.4	2485	9.8
2550	2150	8.5	2261	8.9	2370	9.4	2477	9.8	—	—
2700	2265	9.0	2368	9.4	2472	9.8	—	—	—	—
2850	2379	9.4	2477	9.8	—	—	—	—	—	—
3000	2495	9.9	—	—	—	—	—	—	—	—

CFM	AVAILABLE EXTERNAL STATIC PRESSURE (in. wg)									
	1.2		1.4		1.6		1.8		2.0	
	rpm	vdc	rpm	vdc	rpm	vdc	rpm	vdc	rpm	vdc
1800	2239	8.8	2340	9.2	2436	9.6	2527	10.0	—	—
1950	2323	9.2	2422	9.6	2516	9.9	—	—	—	—
2100	2408	9.5	2505	9.9	—	—	—	—	—	—
2250	2495	9.9	—	—	—	—	—	—	—	—
2400	—	—	—	—	—	—	—	—	—	—
2550	—	—	—	—	—	—	—	—	—	—
2700	—	—	—	—	—	—	—	—	—	—
2850	—	—	—	—	—	—	—	—	—	—
3000	—	—	—	—	—	—	—	—	—	—

Standard/Medium Static 1596-2530 rpm

Fan data (cont)

48FEFM07 Three Phase — High Static — 6 Ton Vertical Supply (rpm - vdc)

CFM	AVAILABLE EXTERNAL STATIC PRESSURE (in. wg)									
	0.2		0.4		0.6		0.8		1.0	
	rpm	vdc	rpm	vdc	rpm	vdc	rpm	vdc	rpm	vdc
1800	1596	5.6	1749	6.2	1889	6.7	2015	7.1	2131	7.5
1950	1704	6.0	1847	6.5	1981	7.0	2104	7.4	2217	7.8
2100	1814	6.4	1948	6.9	2075	7.3	2194	7.7	2305	8.1
2250	1925	6.8	2050	7.2	2172	7.7	2286	8.1	2394	8.4
2400	2037	7.2	2154	7.6	2270	8.0	2381	8.4	2485	8.8
2550	2150	7.6	2261	8.0	2370	8.4	2477	8.7	2578	9.1
2700	2265	8.0	2368	8.3	2472	8.7	2574	9.1	2672	9.4
2850	2379	8.4	2477	8.7	2576	9.1	2674	9.4	2768	9.8
3000	2495	8.8	2587	9.1	2681	9.5	2775	9.8	—	—

CFM	AVAILABLE EXTERNAL STATIC PRESSURE (in. wg)									
	1.2		1.4		1.6		1.8		2.0	
	rpm	vdc	rpm	vdc	rpm	vdc	rpm	vdc	rpm	vdc
1800	2239	7.9	2340	8.3	2436	8.6	2527	8.9	2615	9.2
1950	2323	8.2	2422	8.5	2516	8.9	2605	9.2	2691	9.5
2100	2408	8.5	2505	8.8	2597	9.2	2685	9.5	2770	9.8
2250	2495	8.8	2590	9.1	2681	9.5	2767	9.8	—	—
2400	2584	9.1	2677	9.4	2766	9.8	—	—	—	—
2550	2674	9.4	2766	9.8	—	—	—	—	—	—
2700	2766	9.8	—	—	—	—	—	—	—	—
2850	—	—	—	—	—	—	—	—	—	—
3000	—	—	—	—	—	—	—	—	—	—

High Static 1596-2836 rpm

48FEEA04 Single Phase — 3 Ton Horizontal Supply (rpm - bhp)

CFM	AVAILABLE EXTERNAL STATIC PRESSURE (in. wg)									
	0.2		0.4		0.6		0.8		1.0	
	rpm	bhp	rpm	bhp	rpm	bhp	rpm	bhp	rpm	bhp
900	1079	0.09	1315	0.16	1510	0.24	1679	0.33	1830	0.43
975	1126	0.10	1355	0.17	1546	0.26	1713	0.35	1863	0.45
1050	1175	0.11	1396	0.19	1584	0.28	1749	0.37	1897	0.48
1125	1226	0.13	1438	0.21	1622	0.30	1785	0.40	1932	0.50
1200	1278	0.15	1482	0.23	1662	0.32	1822	0.42	1968	0.53
1275	1331	0.16	1528	0.25	1703	0.34	1861	0.45	2004	0.56
1350	1386	0.19	1575	0.27	1746	0.37	1900	0.48	2042	0.59
1425	1441	0.21	1623	0.30	1789	0.40	1941	0.51	2080	0.63
1500	1498	0.23	1672	0.33	1834	0.43	1982	0.54	2119	0.66

CFM	AVAILABLE EXTERNAL STATIC PRESSURE (in. wg)									
	1.2		1.4		1.6		1.8		2.0	
	rpm	bhp	rpm	bhp	rpm	bhp	rpm	bhp	rpm	bhp
900	1968	0.53	2096	0.64	2215	0.76	2328	0.88	2434	1.00
975	2000	0.56	2127	0.67	2246	0.79	2358	0.91	2464	1.04
1050	2033	0.59	2159	0.70	2277	0.82	2389	0.95	—	—
1125	2067	0.61	2192	0.73	2309	0.86	2420	0.99	—	—
1200	2101	0.65	2225	0.77	2342	0.89	2452	1.03	—	—
1275	2136	0.68	2260	0.80	2376	0.93	2485	1.07	—	—
1350	2172	0.71	2295	0.84	2410	0.97	—	—	—	—
1425	2209	0.75	2330	0.88	2445	1.02	—	—	—	—
1500	2247	0.79	2367	0.92	2480	1.06	—	—	—	—

Standard/Medium Static 1079-2190 rpm, 0.71 maximum bhp

High Static 1079-2490 rpm, 1.07 maximum bhp

48FEEA04 Single Phase — Standard/Medium Static — 3 Ton Horizontal Supply (rpm - vdc)

CFM	AVAILABLE EXTERNAL STATIC PRESSURE (in. wg)									
	0.2		0.4		0.6		0.8		1.0	
	rpm	vdc	rpm	vdc	rpm	vdc	rpm	vdc	rpm	vdc
900	1079	4.9	1315	6.0	1510	6.9	1679	7.7	1830	8.4
975	1126	5.1	1355	6.2	1546	7.1	1713	7.8	1863	8.5
1050	1175	5.4	1396	6.4	1584	7.2	1749	8.0	1897	8.7
1125	1226	5.6	1438	6.6	1622	7.4	1785	8.2	1932	8.8
1200	1278	5.8	1482	6.8	1662	7.6	1822	8.3	1968	9.0
1275	1331	6.1	1528	7.0	1703	7.8	1861	8.5	2004	9.2
1350	1386	6.3	1575	7.2	1746	8.0	1900	8.7	2042	9.3
1425	1441	6.6	1623	7.4	1789	8.2	1941	8.9	2080	9.5
1500	1498	6.8	1672	7.6	1834	8.4	1982	9.1	2119	9.7

CFM	AVAILABLE EXTERNAL STATIC PRESSURE (in. wg)									
	1.2		1.4		1.6		1.8		2.0	
	rpm	vdc	rpm	vdc	rpm	vdc	rpm	vdc	rpm	vdc
900	1968	9.0	2096	9.6	—	—	—	—	—	—
975	2000	9.1	2127	9.7	—	—	—	—	—	—
1050	2033	9.3	2159	9.9	—	—	—	—	—	—
1125	2067	9.4	—	—	—	—	—	—	—	—
1200	2101	9.6	—	—	—	—	—	—	—	—
1275	2136	9.8	—	—	—	—	—	—	—	—
1350	2172	9.9	—	—	—	—	—	—	—	—
1425	—	—	—	—	—	—	—	—	—	—
1500	—	—	—	—	—	—	—	—	—	—

Standard/Medium Static 1079-2190 rpm

Fan data (cont)

48FEEA04 Single Phase — High Static — 3 Ton Horizontal Supply (rpm - vdc)

CFM	AVAILABLE EXTERNAL STATIC PRESSURE (in. wg)									
	0.2		0.4		0.6		0.8		1.0	
	rpm	vdc	rpm	vdc	rpm	vdc	rpm	vdc	rpm	vdc
900	1079	4.3	1315	5.3	1510	6.1	1679	6.7	1830	7.3
975	1126	4.5	1355	5.4	1546	6.2	1713	6.9	1863	7.5
1050	1175	4.7	1396	5.6	1584	6.4	1749	7.0	1897	7.6
1125	1226	4.9	1438	5.8	1622	6.5	1785	7.2	1932	7.8
1200	1278	5.1	1482	6.0	1662	6.7	1822	7.3	1968	7.9
1275	1331	5.3	1528	6.1	1703	6.8	1861	7.5	2004	8.0
1350	1386	5.6	1575	6.3	1746	7.0	1900	7.6	2042	8.2
1425	1441	5.8	1623	6.5	1789	7.2	1941	7.8	2080	8.4
1500	1498	6.0	1672	6.7	1834	7.4	1982	8.0	2119	8.5

CFM	AVAILABLE EXTERNAL STATIC PRESSURE (in. wg)									
	1.2		1.4		1.6		1.8		2.0	
	rpm	vdc	rpm	vdc	rpm	vdc	rpm	vdc	rpm	vdc
900	1968	7.9	2096	8.4	2215	8.9	2328	9.3	2434	9.8
975	2000	8.0	2127	8.5	2246	9.0	2358	9.5	2464	9.9
1050	2033	8.2	2159	8.7	2277	9.1	2389	9.6	—	—
1125	2067	8.3	2192	8.8	2309	9.3	2420	9.7	—	—
1200	2101	8.4	2225	8.9	2342	9.4	2452	9.8	—	—
1275	2136	8.6	2260	9.1	2376	9.5	2485	10.0	—	—
1350	2172	8.7	2295	9.2	2410	9.7	—	—	—	—
1425	2209	8.9	2330	9.4	2445	9.8	—	—	—	—
1500	2247	9.0	2367	9.5	2480	10.0	—	—	—	—

High Static 1079-2490 rpm

48FEEA04 Three Phase — 3 Ton Horizontal Supply (rpm - bhp)

CFM	AVAILABLE EXTERNAL STATIC PRESSURE (in. wg)									
	0.2		0.4		0.6		0.8		1.0	
	rpm	bhp	rpm	bhp	rpm	bhp	rpm	bhp	rpm	bhp
900	1079	0.09	1315	0.16	1510	0.24	1679	0.33	1830	0.43
975	1126	0.10	1355	0.17	1546	0.26	1713	0.35	1863	0.45
1050	1175	0.11	1396	0.19	1584	0.28	1749	0.37	1897	0.48
1125	1226	0.13	1438	0.21	1622	0.30	1785	0.40	1932	0.50
1200	1278	0.15	1482	0.23	1662	0.32	1822	0.42	1968	0.53
1275	1331	0.16	1528	0.25	1703	0.34	1861	0.45	2004	0.56
1350	1386	0.19	1575	0.27	1746	0.37	1900	0.48	2042	0.59
1425	1441	0.21	1623	0.30	1789	0.40	1941	0.51	2080	0.63
1500	1498	0.23	1672	0.33	1834	0.43	1982	0.54	2119	0.66

CFM	AVAILABLE EXTERNAL STATIC PRESSURE (in. wg)									
	1.2		1.4		1.6		1.8		2.0	
	rpm	bhp	rpm	bhp	rpm	bhp	rpm	bhp	rpm	bhp
900	1968	0.53	2096	0.64	2215	0.76	2328	0.88	2434	1.00
975	2000	0.56	2127	0.67	2246	0.79	2358	0.91	2464	1.04
1050	2033	0.59	2159	0.70	2277	0.82	2389	0.95	—	—
1125	2067	0.61	2192	0.73	2309	0.86	2420	0.99	—	—
1200	2101	0.65	2225	0.77	2342	0.89	2452	1.03	—	—
1275	2136	0.68	2260	0.80	2376	0.93	2485	1.07	—	—
1350	2172	0.71	2295	0.84	2410	0.97	—	—	—	—
1425	2209	0.75	2330	0.88	2445	1.02	—	—	—	—
1500	2247	0.79	2367	0.92	2480	1.06	—	—	—	—

Standard/Medium Static 1079-2190 rpm, 0.71 maximum bhp

High Static 1079-2490 rpm, 1.07 maximum bhp

48FEEA04 Three Phase — Standard/Medium Static — 3 Ton Horizontal Supply (rpm - vdc)

CFM	AVAILABLE EXTERNAL STATIC PRESSURE (in. wg)									
	0.2		0.4		0.6		0.8		1.0	
	rpm	vdc	rpm	vdc	rpm	vdc	rpm	vdc	rpm	vdc
900	1079	4.9	1315	6.0	1510	6.9	1679	7.7	1830	8.4
975	1126	5.1	1355	6.2	1546	7.1	1713	7.8	1863	8.5
1050	1175	5.4	1396	6.4	1584	7.2	1749	8.0	1897	8.7
1125	1226	5.6	1438	6.6	1622	7.4	1785	8.2	1932	8.8
1200	1278	5.8	1482	6.8	1662	7.6	1822	8.3	1968	9.0
1275	1331	6.1	1528	7.0	1703	7.8	1861	8.5	2004	9.2
1350	1386	6.3	1575	7.2	1746	8.0	1900	8.7	2042	9.3
1425	1441	6.6	1623	7.4	1789	8.2	1941	8.9	2080	9.5
1500	1498	6.8	1672	7.6	1834	8.4	1982	9.1	2119	9.7

CFM	AVAILABLE EXTERNAL STATIC PRESSURE (in. wg)									
	1.2		1.4		1.6		1.8		2.0	
	rpm	vdc	rpm	vdc	rpm	vdc	rpm	vdc	rpm	vdc
900	1968	9.0	2096	9.6	—	—	—	—	—	—
975	2000	9.1	2127	9.7	—	—	—	—	—	—
1050	2033	9.3	2159	9.9	—	—	—	—	—	—
1125	2067	9.4	—	—	—	—	—	—	—	—
1200	2101	9.6	—	—	—	—	—	—	—	—
1275	2136	9.8	—	—	—	—	—	—	—	—
1350	2172	9.9	—	—	—	—	—	—	—	—
1425	—	—	—	—	—	—	—	—	—	—
1500	—	—	—	—	—	—	—	—	—	—

Standard/Medium Static 1079-2190 rpm

Fan data (cont)

48FEEA04 Three Phase — High Static — 3 Ton Horizontal Supply (rpm - vdc)

CFM	AVAILABLE EXTERNAL STATIC PRESSURE (in. wg)									
	0.2		0.4		0.6		0.8		1.0	
	rpm	vdc	rpm	vdc	rpm	vdc	rpm	vdc	rpm	vdc
900	1079	4.3	1315	5.3	1510	6.1	1679	6.7	1830	7.3
975	1126	4.5	1355	5.4	1546	6.2	1713	6.9	1863	7.5
1050	1175	4.7	1396	5.6	1584	6.4	1749	7.0	1897	7.6
1125	1226	4.9	1438	5.8	1622	6.5	1785	7.2	1932	7.8
1200	1278	5.1	1482	6.0	1662	6.7	1822	7.3	1968	7.9
1275	1331	5.3	1528	6.1	1703	6.8	1861	7.5	2004	8.0
1350	1386	5.6	1575	6.3	1746	7.0	1900	7.6	2042	8.2
1425	1441	5.8	1623	6.5	1789	7.2	1941	7.8	2080	8.4
1500	1498	6.0	1672	6.7	1834	7.4	1982	8.0	2119	8.5

CFM	AVAILABLE EXTERNAL STATIC PRESSURE (in. wg)									
	1.2		1.4		1.6		1.8		2.0	
	rpm	vdc	rpm	vdc	rpm	vdc	rpm	vdc	rpm	vdc
900	1968	7.9	2096	8.4	2215	8.9	2328	9.3	2434	9.8
975	2000	8.0	2127	8.5	2246	9.0	2358	9.5	2464	9.9
1050	2033	8.2	2159	8.7	2277	9.1	2389	9.6	—	—
1125	2067	8.3	2192	8.8	2309	9.3	2420	9.7	—	—
1200	2101	8.4	2225	8.9	2342	9.4	2452	9.8	—	—
1275	2136	8.6	2260	9.1	2376	9.5	2485	10.0	—	—
1350	2172	8.7	2295	9.2	2410	9.7	—	—	—	—
1425	2209	8.9	2330	9.4	2445	9.8	—	—	—	—
1500	2247	9.0	2367	9.5	2480	10.0	—	—	—	—

High Static 1079-2490 rpm

48FEFA05 Single Phase — 4 Ton Horizontal Supply (rpm - bhp)

CFM	AVAILABLE EXTERNAL STATIC PRESSURE (in. wg)									
	0.2		0.4		0.6		0.8		1.0	
	rpm	bhp	rpm	bhp	rpm	bhp	rpm	bhp	rpm	bhp
1200	1217	0.19	1411	0.30	1576	0.42	1722	0.55	1855	0.68
1300	1283	0.23	1470	0.34	1631	0.46	1774	0.60	1904	0.74
1400	1351	0.26	1531	0.38	1688	0.51	1827	0.65	1955	0.80
1500	1420	0.31	1593	0.43	1746	0.57	1883	0.71	2008	0.86
1600	1491	0.35	1657	0.48	1805	0.63	1939	0.78	2062	0.93
1700	1563	0.41	1722	0.54	1866	0.69	1997	0.85	2118	1.01
1800	1635	0.46	1789	0.61	1928	0.76	2056	0.92	2174	1.09
1900	1709	0.53	1856	0.68	1991	0.84	2116	1.01	2232	1.18
2000	1784	0.60	1925	0.76	2056	0.92	2178	1.10	2291	1.28

CFM	AVAILABLE EXTERNAL STATIC PRESSURE (in. wg)									
	1.2		1.4		1.6		1.8		2.0	
	rpm	bhp	rpm	bhp	rpm	bhp	rpm	bhp	rpm	bhp
1200	1979	0.83	2094	0.98	2204	1.15	2308	1.32	2409	1.50
1300	2025	0.89	2138	1.05	2246	1.21	2349	1.39	2447	1.57
1400	2074	0.95	2185	1.11	2291	1.28	2391	1.46	—	—
1500	2124	1.02	2234	1.19	2338	1.36	2436	1.54	—	—
1600	2176	1.10	2284	1.27	2386	1.45	—	—	—	—
1700	2230	1.18	2336	1.36	2436	1.54	—	—	—	—
1800	2285	1.27	2389	1.45	—	—	—	—	—	—
1900	2341	1.36	2444	1.55	—	—	—	—	—	—
2000	2398	1.46	—	—	—	—	—	—	—	—

Standard/Medium Static 1217-2170 rpm, 1.06 maximum bhp

High Static 1216-2460 rpm, 1.53 maximum bhp

48FEFA05 Single Phase — Standard/Medium Static — 4 Ton Horizontal Supply (rpm - vdc)

CFM	AVAILABLE EXTERNAL STATIC PRESSURE (in. wg)									
	0.2		0.4		0.6		0.8		1.0	
	rpm	vdc	rpm	vdc	rpm	vdc	rpm	vdc	rpm	vdc
1200	1217	5.6	1411	6.5	1576	7.3	1722	7.9	1855	8.5
1300	1283	5.9	1470	6.8	1631	7.5	1774	8.2	1904	8.8
1400	1351	6.2	1531	7.1	1688	7.8	1827	8.4	1955	9.0
1500	1420	6.5	1593	7.3	1746	8.0	1883	8.7	2008	9.3
1600	1491	6.9	1657	7.6	1805	8.3	1939	8.9	2062	9.5
1700	1563	7.2	1722	7.9	1866	8.6	1997	9.2	2118	9.8
1800	1635	7.5	1789	8.2	1928	8.9	2056	9.5	—	—
1900	1709	7.9	1856	8.6	1991	9.2	2116	9.8	—	—
2000	1784	8.2	1925	8.9	2056	9.5	—	—	—	—

CFM	AVAILABLE EXTERNAL STATIC PRESSURE (in. wg)									
	1.2		1.4		1.6		1.8		2.0	
	rpm	vdc	rpm	vdc	rpm	vdc	rpm	vdc	rpm	vdc
1200	1979	9.1	2094	9.6	—	—	—	—	—	—
1300	2025	9.3	2138	9.9	—	—	—	—	—	—
1400	2074	9.6	—	—	—	—	—	—	—	—
1500	2124	9.8	—	—	—	—	—	—	—	—
1600	—	—	—	—	—	—	—	—	—	—
1700	—	—	—	—	—	—	—	—	—	—
1800	—	—	—	—	—	—	—	—	—	—
1900	—	—	—	—	—	—	—	—	—	—
2000	—	—	—	—	—	—	—	—	—	—

Standard/Medium Static 1217-2170 rpm

Fan data (cont)

48FEFA05 Single Phase — High Static — 4 Ton Horizontal Supply (rpm - vdc)

CFM	AVAILABLE EXTERNAL STATIC PRESSURE (in. wg)									
	0.2		0.4		0.6		0.8		1.0	
	rpm	vdc	rpm	vdc	rpm	vdc	rpm	vdc	rpm	vdc
1200	1217	4.9	1411	5.7	1576	6.4	1722	7.0	1855	7.5
1300	1283	5.2	1470	6.0	1631	6.6	1774	7.2	1904	7.7
1400	1351	5.5	1531	6.2	1688	6.9	1827	7.4	1955	7.9
1500	1420	5.8	1593	6.5	1746	7.1	1883	7.7	2008	8.2
1600	1491	6.1	1657	6.7	1805	7.3	1939	7.9	2062	8.4
1700	1563	6.4	1722	7.0	1866	7.6	1997	8.1	2118	8.6
1800	1635	6.6	1789	7.3	1928	7.8	2056	8.4	2174	8.8
1900	1709	6.9	1856	7.5	1991	8.1	2116	8.6	2232	9.1
2000	1784	7.3	1925	7.8	2056	8.4	2178	8.9	2291	9.3

CFM	AVAILABLE EXTERNAL STATIC PRESSURE (in. wg)									
	1.2		1.4		1.6		1.8		2.0	
	rpm	vdc	rpm	vdc	rpm	vdc	rpm	vdc	rpm	vdc
1200	1979	8.0	2094	8.5	2204	9.0	2308	9.4	2409	9.8
1300	2025	8.2	2138	8.7	2246	9.1	2349	9.5	2447	9.9
1400	2074	8.4	2185	8.9	2291	9.3	2391	9.7	—	—
1500	2124	8.6	2234	9.1	2338	9.5	2436	9.9	—	—
1600	2176	8.8	2284	9.3	2386	9.7	—	—	—	—
1700	2230	9.1	2336	9.5	2436	9.9	—	—	—	—
1800	2285	9.3	2389	9.7	—	—	—	—	—	—
1900	2341	9.5	2444	9.9	—	—	—	—	—	—
2000	2398	9.7	—	—	—	—	—	—	—	—

High Static 1217-2460 rpm

Fan data (cont)

48FEFA05 Three Phase — 4 Ton Horizontal Supply (rpm - bhp)

CFM	AVAILABLE EXTERNAL STATIC PRESSURE (in. wg)									
	0.2		0.4		0.6		0.8		1.0	
	rpm	bhp	rpm	bhp	rpm	bhp	rpm	bhp	rpm	bhp
1200	1216	0.19	1411	0.30	1576	0.42	1722	0.55	1855	0.68
1300	1282	0.23	1470	0.34	1631	0.46	1773	0.60	1904	0.74
1400	1351	0.26	1531	0.38	1688	0.51	1827	0.65	1955	0.80
1500	1420	0.31	1593	0.43	1746	0.57	1882	0.71	2008	0.86
1600	1491	0.35	1657	0.48	1806	0.63	1940	0.78	2062	0.93
1700	1563	0.41	1722	0.54	1866	0.69	1997	0.85	2118	1.01
1800	1636	0.47	1788	0.61	1928	0.76	2056	0.92	2175	1.09
1900	1710	0.53	1856	0.68	1991	0.84	2116	1.01	2233	1.18
2000	1784	0.60	1924	0.76	2055	0.92	2178	1.10	2292	1.28

CFM	AVAILABLE EXTERNAL STATIC PRESSURE (in. wg)									
	1.2		1.4		1.6		1.8		2.0	
	rpm	bhp	rpm	bhp	rpm	bhp	rpm	bhp	rpm	bhp
1200	1978	0.83	2094	0.98	2204	1.15	2308	1.32	2409	1.50
1300	2025	0.89	2139	1.05	2246	1.21	2349	1.39	2447	1.57
1400	2073	0.95	2185	1.11	2291	1.28	2392	1.46	2488	1.64
1500	2124	1.02	2233	1.19	2337	1.36	2437	1.54	2532	1.73
1600	2176	1.10	2284	1.27	2386	1.45	2483	1.63	2577	1.82
1700	2230	1.18	2336	1.36	2436	1.54	2532	1.73	2624	1.92
1800	2285	1.27	2389	1.45	2488	1.64	2582	1.83	—	—
1900	2341	1.36	2443	1.55	2541	1.74	2634	1.94	—	—
2000	2399	1.46	2499	1.66	2595	1.85	—	—	—	—

Standard/Medium Static 1216-2170 rpm, 1.06 maximum bhp

High Static 1216-2660 rpm, 1.96 maximum bhp

48FEFA05 Three Phase — Standard/Medium Static — 4 Ton Horizontal Supply (rpm - vdc)

CFM	AVAILABLE EXTERNAL STATIC PRESSURE (in. wg)									
	0.2		0.4		0.6		0.8		1.0	
	rpm	vdc	rpm	vdc	rpm	vdc	rpm	vdc	rpm	vdc
1200	1216	5.6	1411	6.5	1576	7.3	1722	7.9	1855	8.5
1300	1282	5.9	1470	6.8	1631	7.5	1773	8.2	1904	8.8
1400	1351	6.2	1531	7.1	1688	7.8	1827	8.4	1955	9.0
1500	1420	6.5	1593	7.3	1746	8.0	1882	8.7	2008	9.3
1600	1491	6.9	1657	7.6	1806	8.3	1940	8.9	2062	9.5
1700	1563	7.2	1722	7.9	1866	8.6	1997	9.2	2118	9.8
1800	1636	7.5	1788	8.2	1928	8.9	2056	9.5	—	—
1900	1710	7.9	1856	8.6	1991	9.2	2116	9.8	—	—
2000	1784	8.2	1924	8.9	2055	9.5	—	—	—	—

CFM	AVAILABLE EXTERNAL STATIC PRESSURE (in. wg)									
	1.2		1.4		1.6		1.8		2.0	
	rpm	vdc	rpm	vdc	rpm	vdc	rpm	vdc	rpm	vdc
1200	1978	9.1	2094	9.6	—	—	—	—	—	—
1300	2025	9.3	2139	9.9	—	—	—	—	—	—
1400	2073	9.6	—	—	—	—	—	—	—	—
1500	2124	9.8	—	—	—	—	—	—	—	—
1600	—	—	—	—	—	—	—	—	—	—
1700	—	—	—	—	—	—	—	—	—	—
1800	—	—	—	—	—	—	—	—	—	—
1900	—	—	—	—	—	—	—	—	—	—
2000	—	—	—	—	—	—	—	—	—	—

Standard/Medium Static 1216-2170 rpm,

48FEFA05 Three Phase — High Static — 4 Ton Horizontal Supply (rpm - vdc)

CFM	AVAILABLE EXTERNAL STATIC PRESSURE (in. wg)									
	0.2		0.4		0.6		0.8		1.0	
	rpm	vdc	rpm	vdc	rpm	vdc	rpm	vdc	rpm	vdc
1200	1216	4.6	1411	5.3	1576	5.9	1722	6.5	1855	7.0
1300	1282	4.8	1470	5.5	1631	6.1	1773	6.7	1904	7.2
1400	1351	5.1	1531	5.8	1688	6.3	1827	6.9	1955	7.3
1500	1420	5.3	1593	6.0	1746	6.6	1882	7.1	2008	7.5
1600	1491	5.6	1657	6.2	1806	6.8	1940	7.3	2062	7.8
1700	1563	5.9	1722	6.5	1866	7.0	1997	7.5	2118	8.0
1800	1636	6.2	1788	6.7	1928	7.2	2056	7.7	2175	8.2
1900	1710	6.4	1856	7.0	1991	7.5	2116	8.0	2233	8.4
2000	1784	6.7	1924	7.2	2055	7.7	2178	8.2	2292	8.6

CFM	AVAILABLE EXTERNAL STATIC PRESSURE (in. wg)									
	1.2		1.4		1.6		1.8		2.0	
	rpm	vdc	rpm	vdc	rpm	vdc	rpm	vdc	rpm	vdc
1200	1978	7.4	2094	7.9	2204	8.3	2308	8.7	2409	9.1
1300	2025	7.6	2139	8.0	2246	8.4	2349	8.8	2447	9.2
1400	2073	7.8	2185	8.2	2291	8.6	2392	9.0	2488	9.4
1500	2124	8.0	2233	8.4	2337	8.8	2437	9.2	2532	9.5
1600	2176	8.2	2284	8.6	2386	9.0	2483	9.3	2577	9.7
1700	2230	8.4	2336	8.8	2436	9.2	2532	9.5	2624	9.9
1800	2285	8.6	2389	9.0	2488	9.4	2582	9.7	—	—
1900	2341	8.8	2443	9.2	2541	9.6	2634	9.9	—	—
2000	2399	9.0	2499	9.4	2595	9.8	—	—	—	—

High Static 1216-2660 rpm

48FEFA06 Single Phase — 5 Ton Horizontal Supply (rpm - bhp)

CFM	AVAILABLE EXTERNAL STATIC PRESSURE (in. wg)									
	0.2		0.4		0.6		0.8		1.0	
	rpm	bhp	rpm	bhp	rpm	bhp	rpm	bhp	rpm	bhp
1500	1420	0.31	1593	0.43	1746	0.57	1883	0.71	2008	0.86
1625	1509	0.37	1674	0.50	1820	0.64	1954	0.79	2076	0.95
1750	1599	0.43	1756	0.58	1897	0.73	2027	0.89	2146	1.05
1875	1691	0.51	1839	0.66	1976	0.82	2101	0.98	2218	1.16
2000	1784	0.60	1925	0.76	2056	0.92	2178	1.10	2292	1.28
2125	1879	0.70	2011	0.86	2138	1.04	2256	1.22	2367	1.41
2250	1974	0.81	2100	0.98	2221	1.16	2335	1.35	2444	1.55
2375	2070	0.94	2189	1.11	2306	1.30	2417	1.49	2522	1.70
2500	2166	1.08	2280	1.25	2392	1.45	2499	1.65	2602	1.86

CFM	AVAILABLE EXTERNAL STATIC PRESSURE (in. wg)									
	1.2		1.4		1.6		1.8		2.0	
	rpm	bhp	rpm	bhp	rpm	bhp	rpm	bhp	rpm	bhp
1500	2124	1.02	2234	1.19	2338	1.36	2437	1.54	2532	1.73
1625	2190	1.12	2297	1.29	2399	1.47	2496	1.65	2589	1.85
1750	2258	1.22	2363	1.40	2462	1.59	2557	1.78	2649	1.98
1875	2327	1.34	2430	1.52	2528	1.72	2621	1.91	—	—
2000	2398	1.46	2499	1.66	2596	1.86	—	—	—	—
2125	2471	1.60	2570	1.80	—	—	—	—	—	—
2250	2546	1.75	2643	1.96	—	—	—	—	—	—
2375	2622	1.91	—	—	—	—	—	—	—	—
2500	—	—	—	—	—	—	—	—	—	—

Standard/Medium Static 1420-2390 rpm, 1.44 maximum bhp

High Static 1420-2660 rpm, 1.96 maximum bhp

48FEFA06 Single Phase — Standard/Medium Static — 5 Ton Horizontal Supply (rpm - vdc)

CFM	AVAILABLE EXTERNAL STATIC PRESSURE (in. wg)									
	0.2		0.4		0.6		0.8		1.0	
	rpm	vdc	rpm	vdc	rpm	vdc	rpm	vdc	rpm	vdc
1500	1420	5.9	1593	6.7	1746	7.3	1883	7.9	2008	8.4
1625	1509	6.3	1673	7.0	1820	7.6	1954	8.2	2076	8.7
1750	1599	6.7	1755	7.3	1897	7.9	2026	8.5	2146	9.0
1875	1691	7.1	1839	7.7	1975	8.3	2101	8.8	2218	9.3
2000	1784	7.5	1925	8.1	2056	8.6	2178	9.1	2291	9.6
2125	1878	7.9	2011	8.4	2138	8.9	2255	9.4	2367	9.9
2250	1974	8.3	2100	8.8	2221	9.3	2335	9.8	—	—
2375	2070	8.7	2189	9.2	2305	9.6	—	—	—	—
2500	2166	9.1	2280	9.5	—	—	—	—	—	—

CFM	AVAILABLE EXTERNAL STATIC PRESSURE (in. wg)									
	1.2		1.4		1.6		1.8		2.0	
	rpm	vdc	rpm	vdc	rpm	vdc	rpm	vdc	rpm	vdc
1500	2124	8.9	2234	9.3	2338	9.8	—	—	—	—
1625	2190	9.2	2297	9.6	—	—	—	—	—	—
1750	2257	9.4	2362	9.9	—	—	—	—	—	—
1875	2327	9.7	—	—	—	—	—	—	—	—
2000	—	—	—	—	—	—	—	—	—	—
2125	—	—	—	—	—	—	—	—	—	—
2250	—	—	—	—	—	—	—	—	—	—
2375	—	—	—	—	—	—	—	—	—	—
2500	—	—	—	—	—	—	—	—	—	—

Standard/Medium Static 1420-2390 rpm

Fan data (cont)

48FEFA06 Single Phase — High Static — 5 Ton Horizontal Supply (rpm - vdc)

CFM	AVAILABLE EXTERNAL STATIC PRESSURE (in. wg)									
	0.2		0.4		0.6		0.8		1.0	
	rpm	vdc	rpm	vdc	rpm	vdc	rpm	vdc	rpm	vdc
1500	1420	5.3	1593	6.0	1746	6.6	1883	7.1	2008	7.5
1625	1509	5.7	1674	6.3	1820	6.8	1954	7.3	2076	7.8
1750	1599	6.0	1756	6.6	1897	7.1	2027	7.6	2146	8.1
1875	1691	6.4	1839	6.9	1976	7.4	2101	7.9	2218	8.3
2000	1784	6.7	1925	7.2	2056	7.7	2178	8.2	2292	8.6
2125	1879	7.1	2011	7.6	2138	8.0	2256	8.5	2367	8.9
2250	1974	7.4	2100	7.9	2221	8.3	2335	8.8	2444	9.2
2375	2070	7.8	2189	8.2	2306	8.7	2417	9.1	2522	9.5
2500	2166	8.1	2280	8.6	2392	9.0	2499	9.4	2602	9.8

CFM	AVAILABLE EXTERNAL STATIC PRESSURE (in. wg)									
	1.2		1.4		1.6		1.8		2.0	
	rpm	vdc	rpm	vdc	rpm	vdc	rpm	vdc	rpm	vdc
1500	2124	8.0	2234	8.4	2338	8.8	2437	9.2	2532	9.5
1625	2190	8.2	2297	8.6	2399	9.0	2496	9.4	2589	9.7
1750	2258	8.5	2363	8.9	2462	9.3	2557	9.6	2649	10.0
1875	2327	8.7	2430	9.1	2528	9.5	2621	9.9	—	—
2000	2398	9.0	2499	9.4	2596	9.8	—	—	—	—
2125	2471	9.3	2570	9.7	—	—	—	—	—	—
2250	2546	9.6	2643	9.9	—	—	—	—	—	—
2375	2622	9.9	—	—	—	—	—	—	—	—
2500	—	—	—	—	—	—	—	—	—	—

High Static 1420-2660 rpm

Fan data (cont)

48FEFA06 Three Phase — 5 Ton Horizontal Supply (rpm - bhp)

CFM	AVAILABLE EXTERNAL STATIC PRESSURE (in. wg)									
	0.2		0.4		0.6		0.8		1.0	
	rpm	bhp	rpm	bhp	rpm	bhp	rpm	bhp	rpm	bhp
1500	1420	0.31	1593	0.43	1746	0.57	1883	0.71	2008	0.86
1625	1509	0.37	1673	0.50	1820	0.64	1954	0.79	2076	0.95
1750	1599	0.43	1755	0.57	1897	0.73	2026	0.88	2146	1.05
1875	1691	0.51	1839	0.66	1976	0.82	2102	0.99	2218	1.16
2000	1784	0.60	1924	0.76	2056	0.92	2178	1.10	2291	1.28
2125	1878	0.70	2011	0.86	2137	1.03	2256	1.22	2367	1.41
2250	1974	0.81	2099	0.98	2221	1.16	2335	1.35	2444	1.55
2375	2070	0.94	2189	1.11	2305	1.30	2416	1.49	2522	1.70
2500	2166	1.08	2280	1.25	2391	1.45	2499	1.65	2601	1.86

CFM	AVAILABLE EXTERNAL STATIC PRESSURE (in. wg)									
	1.2		1.4		1.6		1.8		2.0	
	rpm	bhp	rpm	bhp	rpm	bhp	rpm	bhp	rpm	bhp
1500	2124	1.02	2233	1.19	2337	1.36	2436	1.54	2532	1.73
1625	2190	1.12	2296	1.29	2398	1.47	2495	1.65	2589	1.85
1750	2257	1.22	2362	1.40	2462	1.59	2557	1.78	2648	1.97
1875	2327	1.34	2430	1.52	2528	1.72	2621	1.91	2710	2.11
2000	2398	1.46	2499	1.66	2595	1.85	2687	2.06	2775	2.27
2125	2471	1.60	2570	1.80	2665	2.01	2755	2.22	—	—
2250	2546	1.75	2643	1.96	2735	2.17	2824	2.39	—	—
2375	2622	1.91	2717	2.12	2807	2.34	—	—	—	—
2500	2699	2.08	2792	2.30	—	—	—	—	—	—

Standard/Medium Static 1420-2390 rpm, 1.44 maximum bhp

High Static 1420-2836 rpm, 2.43 maximum bhp

48FEFA06 Three Phase — Standard/Medium Static — 5 Ton Horizontal Supply (rpm - vdc)

CFM	AVAILABLE EXTERNAL STATIC PRESSURE (in. wg)									
	0.2		0.4		0.6		0.8		1.0	
	rpm	vdc	rpm	vdc	rpm	vdc	rpm	vdc	rpm	vdc
1500	1420	5.9	1593	6.7	1746	7.3	1883	7.9	2008	8.4
1625	1509	6.3	1673	7.0	1820	7.6	1954	8.2	2076	8.7
1750	1599	6.7	1755	7.3	1897	7.9	2026	8.5	2146	9.0
1875	1691	7.1	1839	7.7	1976	8.3	2102	8.8	2218	9.3
2000	1784	7.5	1924	8.1	2056	8.6	2178	9.1	2291	9.6
2125	1878	7.9	2011	8.4	2137	8.9	2256	9.4	2367	9.9
2250	1974	8.3	2099	8.8	2221	9.3	2335	9.8	—	—
2375	2070	8.7	2189	9.2	2305	9.6	—	—	—	—
2500	2166	9.1	2280	9.5	—	—	—	—	—	—

CFM	AVAILABLE EXTERNAL STATIC PRESSURE (in. wg)									
	1.2		1.4		1.6		1.8		2.0	
	rpm	vdc	rpm	vdc	rpm	vdc	rpm	vdc	rpm	vdc
1500	2124	8.9	2233	9.3	2337	9.8	—	—	—	—
1625	2190	9.2	2296	9.6	—	—	—	—	—	—
1750	2257	9.4	2362	9.9	—	—	—	—	—	—
1875	2327	9.7	—	—	—	—	—	—	—	—
2000	—	—	—	—	—	—	—	—	—	—
2125	—	—	—	—	—	—	—	—	—	—
2250	—	—	—	—	—	—	—	—	—	—
2375	—	—	—	—	—	—	—	—	—	—
2500	—	—	—	—	—	—	—	—	—	—

Standard/Medium Static 1420-2390 rpm

48FEFA06 Three Phase — High Static — 5 Ton Horizontal Supply (rpm - vdc)

CFM	AVAILABLE EXTERNAL STATIC PRESSURE (in. wg)									
	0.2		0.4		0.6		0.8		1.0	
	rpm	vdc	rpm	vdc	rpm	vdc	rpm	vdc	rpm	vdc
1500	1420	5.0	1593	5.6	1746	6.2	1883	6.6	2008	7.1
1625	1509	5.3	1673	5.9	1820	6.4	1954	6.9	2076	7.3
1750	1599	5.6	1755	6.2	1897	6.7	2026	7.1	2146	7.6
1875	1691	6.0	1839	6.5	1976	7.0	2102	7.4	2218	7.8
2000	1784	6.3	1924	6.8	2056	7.2	2178	7.7	2291	8.1
2125	1878	6.6	2011	7.1	2137	7.5	2256	8.0	2367	8.3
2250	1974	7.0	2099	7.4	2221	7.8	2335	8.2	2444	8.6
2375	2070	7.3	2189	7.7	2305	8.1	2416	8.5	2522	8.9
2500	2166	7.6	2280	8.0	2391	8.4	2499	8.8	2601	9.2

CFM	AVAILABLE EXTERNAL STATIC PRESSURE (in. wg)									
	1.2		1.4		1.6		1.8		2.0	
	rpm	vdc	rpm	vdc	rpm	vdc	rpm	vdc	rpm	vdc
1500	2124	7.5	2233	7.9	2337	8.2	2436	8.6	2532	8.9
1625	2190	7.7	2296	8.1	2398	8.5	2495	8.8	2589	9.1
1750	2257	8.0	2362	8.3	2462	8.7	2557	9.0	2648	9.3
1875	2327	8.2	2430	8.6	2528	8.9	2621	9.2	2710	9.6
2000	2398	8.5	2499	8.8	2595	9.2	2687	9.5	2775	9.8
2125	2471	8.7	2570	9.1	2665	9.4	2755	9.7	—	—
2250	2546	9.0	2643	9.3	2735	9.6	2824	10.0	—	—
2375	2622	9.2	2717	9.6	2807	9.9	—	—	—	—
2500	2699	9.5	2792	9.8	—	—	—	—	—	—

High Static 1420-2836 rpm

48FEFM07 Three Phase — 6 Ton Horizontal Supply (rpm - bhp)

CFM	AVAILABLE EXTERNAL STATIC PRESSURE (in. wg)									
	0.2		0.4		0.6		0.8		1.0	
	rpm	bhp	rpm	bhp	rpm	bhp	rpm	bhp	rpm	bhp
1800	1537	0.38	1685	0.51	1824	0.64	1953	0.79	2071	0.94
1950	1641	0.47	1778	0.59	1911	0.74	2035	0.89	2150	1.05
2100	1748	0.56	1874	0.69	2000	0.84	2119	1.00	2231	1.17
2250	1855	0.67	1973	0.81	2091	0.96	2206	1.13	2314	1.31
2400	1964	0.80	2074	0.94	2185	1.10	2294	1.27	2399	1.45
2550	2074	0.94	2176	1.08	2281	1.25	2385	1.43	2486	1.62
2700	2185	1.10	2281	1.25	2379	1.42	2478	1.60	2575	1.80
2850	2296	1.27	2386	1.43	2479	1.60	2573	1.79	2666	1.99
3000	2408	1.47	2493	1.63	2581	1.81	2670	2.00	2759	2.21

CFM	AVAILABLE EXTERNAL STATIC PRESSURE (in. wg)									
	1.2		1.4		1.6		1.8		2.0	
	rpm	bhp	rpm	bhp	rpm	bhp	rpm	bhp	rpm	bhp
1800	2182	1.10	2285	1.26	2382	1.43	2476	1.60	2564	1.78
1950	2258	1.21	2359	1.39	2455	1.56	2547	1.74	2634	1.93
2100	2337	1.35	2436	1.52	2530	1.71	2620	1.90	2706	2.09
2250	2417	1.49	2514	1.67	2606	1.86	2695	2.06	2780	2.26
2400	2499	1.64	2594	1.84	2685	2.04	2771	2.24	—	—
2550	2583	1.81	2676	2.02	2765	2.22	—	—	—	—
2700	2669	2.00	2759	2.21	—	—	—	—	—	—
2850	2757	2.20	—	—	—	—	—	—	—	—
3000	—	—	—	—	—	—	—	—	—	—

Standard/Medium Static 1537-2530 rpm, 1.76 maximum bhp

High Static 1537-2836 rpm, 2.43 maximum bhp

48FEFM07 Three Phase — Standard/Medium Static — 6 Ton Horizontal Supply (rpm - vdc)

CFM	AVAILABLE EXTERNAL STATIC PRESSURE (in. wg)									
	0.2		0.4		0.6		0.8		1.0	
	rpm	vdc	rpm	vdc	rpm	vdc	rpm	vdc	rpm	vdc
1800	1537	6.1	1685	6.7	1824	7.2	1953	7.7	2071	8.2
1950	1641	6.5	1778	7.0	1911	7.6	2035	8.0	2150	8.5
2100	1748	6.9	1874	7.4	2000	7.9	2119	8.4	2231	8.8
2250	1855	7.3	1973	7.8	2091	8.3	2206	8.7	2314	9.1
2400	1964	7.8	2074	8.2	2185	8.6	2294	9.1	2399	9.5
2550	2074	8.2	2176	8.6	2281	9.0	2385	9.4	2486	9.8
2700	2185	8.6	2281	9.0	2379	9.4	2478	9.8	—	—
2850	2296	9.1	2386	9.4	2479	9.8	—	—	—	—
3000	2408	9.5	2493	9.9	—	—	—	—	—	—

CFM	AVAILABLE EXTERNAL STATIC PRESSURE (in. wg)									
	1.2		1.4		1.6		1.8		2.0	
	rpm	vdc	rpm	vdc	rpm	vdc	rpm	vdc	rpm	vdc
1800	2182	8.6	2285	9.0	2382	9.4	2476	9.8	—	—
1950	2258	8.9	2359	9.3	2455	9.7	—	—	—	—
2100	2337	9.2	2436	9.6	2530	10.0	—	—	—	—
2250	2417	9.6	2514	9.9	—	—	—	—	—	—
2400	2499	9.9	—	—	—	—	—	—	—	—
2550	—	—	—	—	—	—	—	—	—	—
2700	—	—	—	—	—	—	—	—	—	—
2850	—	—	—	—	—	—	—	—	—	—
3000	—	—	—	—	—	—	—	—	—	—

Standard/Medium Static 1537-2530 rpm

48FEFM07 Three Phase — High Static — 6 Ton Horizontal Supply (rpm - vdc)

CFM	AVAILABLE EXTERNAL STATIC PRESSURE (in. wg)									
	0.2		0.4		0.6		0.8		1.0	
	rpm	vdc	rpm	vdc	rpm	vdc	rpm	vdc	rpm	vdc
1800	1537	5.4	1685	5.9	1824	6.4	1953	6.9	2071	7.3
1950	1641	5.8	1778	6.3	1911	6.7	2035	7.2	2150	7.6
2100	1748	6.2	1874	6.6	2000	7.1	2119	7.5	2231	7.9
2250	1855	6.5	1973	7.0	2091	7.4	2206	7.8	2314	8.2
2400	1964	6.9	2074	7.3	2185	7.7	2294	8.1	2399	8.5
2550	2074	7.3	2176	7.7	2281	8.0	2385	8.4	2486	8.8
2700	2185	7.7	2281	8.0	2379	8.4	2478	8.7	2575	9.1
2850	2296	8.1	2386	8.4	2479	8.7	2573	9.1	2666	9.4
3000	2408	8.5	2493	8.8	2581	9.1	2670	9.4	2759	9.7

CFM	AVAILABLE EXTERNAL STATIC PRESSURE (in. wg)									
	1.2		1.4		1.6		1.8		2.0	
	rpm	vdc	rpm	vdc	rpm	vdc	rpm	vdc	rpm	vdc
1800	2182	7.7	2285	8.1	2382	8.4	2476	8.7	2564	9.0
1950	2258	8.0	2359	8.3	2455	8.7	2547	9.0	2634	9.3
2100	2337	8.2	2436	8.6	2530	8.9	2620	9.2	2706	9.5
2250	2417	8.5	2514	8.9	2606	9.2	2695	9.5	2780	9.8
2400	2499	8.8	2594	9.1	2685	9.5	2771	9.8	—	—
2550	2583	9.1	2676	9.4	2765	9.7	—	—	—	—
2700	2669	9.4	2759	9.7	—	—	—	—	—	—
2850	2757	9.7	—	—	—	—	—	—	—	—
3000	—	—	—	—	—	—	—	—	—	—

High Static 1537-2836 rpm

50FE-A04 Single Phase — 3 Ton Vertical Supply (rpm - bhp)

CFM	AVAILABLE EXTERNAL STATIC PRESSURE (in. wg)									
	0.2		0.4		0.6		0.8		1.0	
	rpm	bhp	rpm	bhp	rpm	bhp	rpm	bhp	rpm	bhp
900	1040	0.08	1307	0.16	1526	0.25	1705	0.35	1859	0.45
975	1082	0.09	1336	0.17	1554	0.26	1736	0.36	1892	0.47
1050	1127	0.10	1366	0.18	1582	0.28	1766	0.38	1925	0.50
1125	1175	0.11	1398	0.19	1609	0.29	1795	0.40	1956	0.52
1200	1225	0.13	1434	0.21	1638	0.31	1822	0.42	1984	0.54
1275	1277	0.15	1472	0.22	1667	0.32	1849	0.44	2012	0.57
1350	1330	0.16	1514	0.24	1699	0.34	1878	0.46	2040	0.59
1425	1385	0.19	1557	0.26	1734	0.36	1906	0.48	2068	0.62
1500	1440	0.21	1603	0.29	1771	0.39	1937	0.51	2095	0.64

CFM	AVAILABLE EXTERNAL STATIC PRESSURE (in. wg)									
	1.2		1.4		1.6		1.8		2.0	
	rpm	bhp	rpm	bhp	rpm	bhp	rpm	bhp	rpm	bhp
900	1995	0.55	2119	0.66	2234	0.78	2342	0.89	2444	1.02
975	2031	0.58	2156	0.70	2272	0.82	2380	0.94	2482	1.06
1050	2065	0.61	2192	0.73	2309	0.86	2418	0.98	—	—
1125	2098	0.64	2226	0.77	2345	0.90	2454	1.03	—	—
1200	2129	0.67	2259	0.80	2379	0.94	2490	1.07	—	—
1275	2159	0.70	2291	0.84	2412	0.98	—	—	—	—
1350	2187	0.73	2321	0.87	2444	1.02	—	—	—	—
1425	2215	0.76	2350	0.90	2474	1.05	—	—	—	—
1500	2242	0.78	2378	0.94	—	—	—	—	—	—

Standard/Medium Static 1040-2190 rpm, 0.71 maximum bhp

High Static 1040-2490 rpm, 1.07 maximum bhp

50FE-A04 Single Phase — Standard/Medium Static — 3 Ton Vertical Supply (rpm - vdc)

CFM	AVAILABLE EXTERNAL STATIC PRESSURE (in. wg)									
	0.2		0.4		0.6		0.8		1.0	
	rpm	vdc	rpm	vdc	rpm	vdc	rpm	vdc	rpm	vdc
900	1040	4.7	1307	6.0	1526	7.0	1705	7.8	1859	8.5
975	1082	4.9	1336	6.1	1554	7.1	1736	7.9	1892	8.6
1050	1127	5.1	1366	6.2	1582	7.2	1766	8.1	1925	8.8
1125	1175	5.4	1398	6.4	1609	7.3	1795	8.2	1956	8.9
1200	1225	5.6	1434	6.5	1638	7.5	1822	8.3	1984	9.1
1275	1277	5.8	1472	6.7	1667	7.6	1849	8.4	2012	9.2
1350	1330	6.1	1514	6.9	1699	7.8	1878	8.6	2040	9.3
1425	1385	6.3	1557	7.1	1734	7.9	1906	8.7	2068	9.4
1500	1440	6.6	1603	7.3	1771	8.1	1937	8.8	2095	9.6

CFM	AVAILABLE EXTERNAL STATIC PRESSURE (in. wg)									
	1.2		1.4		1.6		1.8		2.0	
	rpm	vdc	rpm	vdc	rpm	vdc	rpm	vdc	rpm	vdc
900	1995	9.1	2119	9.7	—	—	—	—	—	—
975	2031	9.3	2156	9.8	—	—	—	—	—	—
1050	2065	9.4	—	—	—	—	—	—	—	—
1125	2098	9.6	—	—	—	—	—	—	—	—
1200	2129	9.7	—	—	—	—	—	—	—	—
1275	2159	9.9	—	—	—	—	—	—	—	—
1350	2187	10.0	—	—	—	—	—	—	—	—
1425	—	—	—	—	—	—	—	—	—	—
1500	—	—	—	—	—	—	—	—	—	—

Standard/Medium Static 1040-2190 rpm

Fan data (cont)

50FE-A04 Single Phase — High Static — 3 Ton Vertical Supply (rpm - vdc)

CFM	AVAILABLE EXTERNAL STATIC PRESSURE (in. wg)									
	0.2		0.4		0.6		0.8		1.0	
	rpm	vdc	rpm	vdc	rpm	vdc	rpm	vdc	rpm	vdc
900	1040	4.2	1307	5.2	1526	6.1	1705	6.8	1859	7.5
975	1082	4.3	1336	5.4	1554	6.2	1736	7.0	1892	7.6
1050	1127	4.5	1366	5.5	1582	6.4	1766	7.1	1925	7.7
1125	1175	4.7	1398	5.6	1609	6.5	1795	7.2	1956	7.9
1200	1225	4.9	1434	5.8	1638	6.6	1822	7.3	1984	8.0
1275	1277	5.1	1472	5.9	1667	6.7	1849	7.4	2012	8.1
1350	1330	5.3	1514	6.1	1699	6.8	1878	7.5	2040	8.2
1425	1385	5.6	1557	6.3	1734	7.0	1906	7.7	2068	8.3
1500	1440	5.8	1603	6.4	1771	7.1	1937	7.8	2095	8.4

CFM	AVAILABLE EXTERNAL STATIC PRESSURE (in. wg)									
	1.2		1.4		1.6		1.8		2.0	
	rpm	vdc	rpm	vdc	rpm	vdc	rpm	vdc	rpm	vdc
900	1995	8.0	2119	8.5	2234	9.0	2342	9.4	2444	9.8
975	2031	8.2	2156	8.7	2272	9.1	2380	9.6	2482	10.0
1050	2065	8.3	2192	8.8	2309	9.3	2418	9.7	—	—
1125	2098	8.4	2226	8.9	2345	9.4	2454	9.9	—	—
1200	2129	8.6	2259	9.1	2379	9.6	2490	10.0	—	—
1275	2159	8.7	2291	9.2	2412	9.7	—	—	—	—
1350	2187	8.8	2321	9.3	2444	9.8	—	—	—	—
1425	2215	8.9	2350	9.4	2474	9.9	—	—	—	—
1500	2242	9.0	2378	9.6	—	—	—	—	—	—

High Static 1040-2490 rpm

50FE-A04 Three Phase — 3 Ton Vertical Supply (rpm - bhp)

CFM	AVAILABLE EXTERNAL STATIC PRESSURE (in. wg)									
	0.2		0.4		0.6		0.8		1.0	
	rpm	bhp	rpm	bhp	rpm	bhp	rpm	bhp	rpm	bhp
900	1040	0.08	1307	0.16	1526	0.25	1705	0.35	1859	0.45
975	1082	0.09	1336	0.17	1554	0.26	1736	0.36	1892	0.47
1050	1127	0.10	1366	0.18	1582	0.28	1766	0.38	1925	0.50
1125	1175	0.11	1398	0.19	1609	0.29	1795	0.40	1956	0.52
1200	1225	0.13	1434	0.21	1638	0.31	1822	0.42	1984	0.54
1275	1277	0.15	1472	0.22	1667	0.32	1849	0.44	2012	0.57
1350	1330	0.16	1514	0.24	1699	0.34	1878	0.46	2040	0.59
1425	1385	0.19	1557	0.26	1734	0.36	1906	0.48	2068	0.62
1500	1440	0.21	1603	0.29	1771	0.39	1937	0.51	2095	0.64

CFM	AVAILABLE EXTERNAL STATIC PRESSURE (in. wg)									
	1.2		1.4		1.6		1.8		2.0	
	rpm	bhp	rpm	bhp	rpm	bhp	rpm	bhp	rpm	bhp
900	1995	0.55	2119	0.66	2234	0.78	2342	0.89	2444	1.02
975	2031	0.58	2156	0.70	2272	0.82	2380	0.94	2482	1.06
1050	2065	0.61	2192	0.73	2309	0.86	2418	0.98	—	—
1125	2098	0.64	2226	0.77	2345	0.90	2454	1.03	—	—
1200	2129	0.67	2259	0.80	2379	0.94	2490	1.07	—	—
1275	2159	0.70	2291	0.84	2412	0.98	—	—	—	—
1350	2187	0.73	2321	0.87	2444	1.02	—	—	—	—
1425	2215	0.76	2350	0.90	2474	1.05	—	—	—	—
1500	2242	0.78	2378	0.94	—	—	—	—	—	—

Standard/Medium Static 1040-2190 rpm, 0.71 maximum bhp

High Static 1040-2490 rpm, 1.07 maximum bhp

50FE-A04 Three Phase — Standard/Medium Static — 3 Ton Vertical Supply (rpm - vdc)

CFM	AVAILABLE EXTERNAL STATIC PRESSURE (in. wg)									
	0.2		0.4		0.6		0.8		1.0	
	rpm	vdc	rpm	vdc	rpm	vdc	rpm	vdc	rpm	vdc
900	1040	4.7	1307	6.0	1526	7.0	1705	7.8	1859	8.5
975	1082	4.9	1336	6.1	1554	7.1	1736	7.9	1892	8.6
1050	1127	5.1	1366	6.2	1582	7.2	1766	8.1	1925	8.8
1125	1175	5.4	1398	6.4	1609	7.3	1795	8.2	1956	8.9
1200	1225	5.6	1434	6.5	1638	7.5	1822	8.3	1984	9.1
1275	1277	5.8	1472	6.7	1667	7.6	1849	8.4	2012	9.2
1350	1330	6.1	1514	6.9	1699	7.8	1878	8.6	2040	9.3
1425	1385	6.3	1557	7.1	1734	7.9	1906	8.7	2068	9.4
1500	1440	6.6	1603	7.3	1771	8.1	1937	8.8	2095	9.6

CFM	AVAILABLE EXTERNAL STATIC PRESSURE (in. wg)									
	1.2		1.4		1.6		1.8		2.0	
	rpm	vdc	rpm	vdc	rpm	vdc	rpm	vdc	rpm	vdc
900	1995	9.1	2119	9.7	—	—	—	—	—	—
975	2031	9.3	2156	9.8	—	—	—	—	—	—
1050	2065	9.4	—	—	—	—	—	—	—	—
1125	2098	9.6	—	—	—	—	—	—	—	—
1200	2129	9.7	—	—	—	—	—	—	—	—
1275	2159	9.9	—	—	—	—	—	—	—	—
1350	2187	10.0	—	—	—	—	—	—	—	—
1425	—	—	—	—	—	—	—	—	—	—
1500	—	—	—	—	—	—	—	—	—	—

Standard/Medium Static 1040-2190 rpm

Fan data (cont)

50FE-A04 Three Phase — High Static — 3 Ton Vertical Supply (rpm - vdc)

CFM	AVAILABLE EXTERNAL STATIC PRESSURE (in. wg)									
	0.2		0.4		0.6		0.8		1.0	
	rpm	vdc	rpm	vdc	rpm	vdc	rpm	vdc	rpm	vdc
900	1040	4.2	1307	5.2	1526	6.1	1705	6.8	1859	7.5
975	1082	4.3	1336	5.4	1554	6.2	1736	7.0	1892	7.6
1050	1127	4.5	1366	5.5	1582	6.4	1766	7.1	1925	7.7
1125	1175	4.7	1398	5.6	1609	6.5	1795	7.2	1956	7.9
1200	1225	4.9	1434	5.8	1638	6.6	1822	7.3	1984	8.0
1275	1277	5.1	1472	5.9	1667	6.7	1849	7.4	2012	8.1
1350	1330	5.3	1514	6.1	1699	6.8	1878	7.5	2040	8.2
1425	1385	5.6	1557	6.3	1734	7.0	1906	7.7	2068	8.3
1500	1440	5.8	1603	6.4	1771	7.1	1937	7.8	2095	8.4

CFM	AVAILABLE EXTERNAL STATIC PRESSURE (in. wg)									
	1.2		1.4		1.6		1.8		2.0	
	rpm	vdc	rpm	vdc	rpm	vdc	rpm	vdc	rpm	vdc
900	1995	8.0	2119	8.5	2234	9.0	2342	9.4	2444	9.8
975	2031	8.2	2156	8.7	2272	9.1	2380	9.6	2482	10.0
1050	2065	8.3	2192	8.8	2309	9.3	2418	9.7	—	—
1125	2098	8.4	2226	8.9	2345	9.4	2454	9.9	—	—
1200	2129	8.6	2259	9.1	2379	9.6	2490	10.0	—	—
1275	2159	8.7	2291	9.2	2412	9.7	—	—	—	—
1350	2187	8.8	2321	9.3	2444	9.8	—	—	—	—
1425	2215	8.9	2350	9.4	2474	9.9	—	—	—	—
1500	2242	9.0	2378	9.6	—	—	—	—	—	—

High Static 1040-2490 rpm

Fan data (cont)

50FE-A05 Single Phase — 4 Ton Vertical Supply (rpm - bhp)

CFM	AVAILABLE EXTERNAL STATIC PRESSURE (in. wg)									
	0.2		0.4		0.6		0.8		1.0	
	rpm	bhp	rpm	bhp	rpm	bhp	rpm	bhp	rpm	bhp
1200	1120	0.15	1327	0.25	1506	0.37	1667	0.50	1814	0.65
1300	1178	0.18	1375	0.28	1549	0.40	1705	0.54	1849	0.69
1400	1238	0.21	1424	0.31	1593	0.44	1745	0.57	1886	0.73
1500	1300	0.24	1476	0.35	1639	0.47	1788	0.62	1925	0.77
1600	1365	0.27	1530	0.39	1688	0.52	1832	0.66	1966	0.82
1700	1430	0.31	1586	0.43	1737	0.56	1878	0.71	2009	0.87
1800	1497	0.36	1644	0.48	1789	0.61	1925	0.76	2053	0.93
1900	1565	0.41	1703	0.53	1842	0.67	1974	0.82	2099	0.99
2000	1633	0.46	1764	0.59	1897	0.73	2025	0.89	2146	1.05

CFM	AVAILABLE EXTERNAL STATIC PRESSURE (in. wg)									
	1.2		1.4		1.6		1.8		2.0	
	rpm	bhp	rpm	bhp	rpm	bhp	rpm	bhp	rpm	bhp
1200	1950	0.81	2077	0.97	2195	1.15	2307	1.33	2411	1.52
1300	1983	0.85	2108	1.02	2225	1.19	2336	1.38	2442	1.58
1400	2017	0.89	2140	1.06	2256	1.24	2367	1.43	—	—
1500	2053	0.93	2174	1.11	2289	1.29	2399	1.49	—	—
1600	2092	0.98	2210	1.16	2323	1.35	2431	1.55	—	—
1700	2132	1.04	2248	1.22	2359	1.41	—	—	—	—
1800	2173	1.10	2288	1.28	2397	1.47	—	—	—	—
1900	2217	1.16	2329	1.35	2436	1.54	—	—	—	—
2000	2262	1.23	2372	1.42	—	—	—	—	—	—

Standard/Medium Static 1120-2170 rpm, 1.06 maximum bhp

High Static 1120-2460 rpm, 1.53 maximum bhp

50FE-A05 Single Phase — Standard/Medium Static — 4 Ton Vertical Supply (rpm - vdc)

CFM	AVAILABLE EXTERNAL STATIC PRESSURE (in. wg)									
	0.2		0.4		0.6		0.8		1.0	
	rpm	vdc	rpm	vdc	rpm	vdc	rpm	vdc	rpm	vdc
1200	1120	5.2	1327	6.1	1506	6.9	1667	7.7	1814	8.4
1300	1178	5.4	1375	6.3	1549	7.1	1705	7.9	1849	8.5
1400	1238	5.7	1424	6.6	1593	7.3	1745	8.0	1886	8.7
1500	1300	6.0	1476	6.8	1639	7.6	1788	8.2	1925	8.9
1600	1365	6.3	1530	7.1	1688	7.8	1832	8.4	1966	9.1
1700	1430	6.6	1586	7.3	1737	8.0	1878	8.7	2009	9.3
1800	1497	6.9	1644	7.6	1789	8.2	1925	8.9	2053	9.5
1900	1565	7.2	1703	7.8	1842	8.5	1974	9.1	2099	9.7
2000	1633	7.5	1764	8.1	1897	8.7	2025	9.3	2146	9.9

CFM	AVAILABLE EXTERNAL STATIC PRESSURE (in. wg)									
	1.2		1.4		1.6		1.8		2.0	
	rpm	vdc	rpm	vdc	rpm	vdc	rpm	vdc	rpm	vdc
1200	1950	9.0	2077	9.6	—	—	—	—	—	—
1300	1983	9.1	2108	9.7	—	—	—	—	—	—
1400	2017	9.3	2140	9.9	—	—	—	—	—	—
1500	2053	9.5	—	—	—	—	—	—	—	—
1600	2092	9.6	—	—	—	—	—	—	—	—
1700	2132	9.8	—	—	—	—	—	—	—	—
1800	—	—	—	—	—	—	—	—	—	—
1900	—	—	—	—	—	—	—	—	—	—
2000	—	—	—	—	—	—	—	—	—	—

Standard/Medium Static 1120-2170 rpm

Fan data (cont)

50FE-A05 Single Phase — High Static — 4 Ton Vertical Supply (rpm - vdc)

CFM	AVAILABLE EXTERNAL STATIC PRESSURE (in. wg)									
	0.2		0.4		0.6		0.8		1.0	
	rpm	vdc	rpm	vdc	rpm	vdc	rpm	vdc	rpm	vdc
1200	1120	4.6	1327	5.4	1506	6.1	1667	6.8	1814	7.4
1300	1178	4.8	1375	5.6	1549	6.3	1705	6.9	1849	7.5
1400	1238	5.0	1424	5.8	1593	6.5	1745	7.1	1886	7.7
1500	1300	5.3	1476	6.0	1639	6.7	1788	7.3	1925	7.8
1600	1365	5.5	1530	6.2	1688	6.9	1832	7.4	1966	8.0
1700	1430	5.8	1586	6.4	1737	7.1	1878	7.6	2009	8.2
1800	1497	6.1	1644	6.7	1789	7.3	1925	7.8	2053	8.3
1900	1565	6.4	1703	6.9	1842	7.5	1974	8.0	2099	8.5
2000	1633	6.6	1764	7.2	1897	7.7	2025	8.2	2146	8.7

CFM	AVAILABLE EXTERNAL STATIC PRESSURE (in. wg)									
	1.2		1.4		1.6		1.8		2.0	
	rpm	vdc	rpm	vdc	rpm	vdc	rpm	vdc	rpm	vdc
1200	1950	7.9	2077	8.4	2195	8.9	2307	9.4	2411	9.8
1300	1983	8.1	2108	8.6	2225	9.0	2336	9.5	2442	9.9
1400	2017	8.2	2140	8.7	2256	9.2	2367	9.6	—	—
1500	2053	8.3	2174	8.8	2289	9.3	2399	9.8	—	—
1600	2092	8.5	2210	9.0	2323	9.4	2431	9.9	—	—
1700	2132	8.7	2248	9.1	2359	9.6	—	—	—	—
1800	2173	8.8	2288	9.3	2397	9.7	—	—	—	—
1900	2217	9.0	2329	9.5	2436	9.9	—	—	—	—
2000	2262	9.2	2372	9.6	—	—	—	—	—	—

High Static 1120-2460 rpm

50FE-A05 Three Phase — 4 Ton Vertical Supply (rpm - bhp)

CFM	AVAILABLE EXTERNAL STATIC PRESSURE (in. wg)									
	0.2		0.4		0.6		0.8		1.0	
	rpm	bhp	rpm	bhp	rpm	bhp	rpm	bhp	rpm	bhp
1200	1115	0.15	1332	0.26	1513	0.37	1665	0.50	1801	0.63
1300	1174	0.17	1376	0.28	1557	0.41	1709	0.54	1843	0.67
1400	1236	0.20	1422	0.31	1601	0.44	1754	0.58	1887	0.72
1500	1300	0.24	1471	0.34	1644	0.48	1798	0.62	1932	0.77
1600	1366	0.27	1524	0.38	1688	0.51	1841	0.67	1976	0.82
1700	1433	0.31	1579	0.42	1734	0.56	1884	0.71	2020	0.88
1800	1501	0.36	1637	0.47	1783	0.60	1928	0.76	2063	0.93
1900	1570	0.41	1698	0.52	1834	0.66	1973	0.82	2106	0.99
2000	1640	0.47	1761	0.58	1888	0.71	2020	0.88	2150	1.06

CFM	AVAILABLE EXTERNAL STATIC PRESSURE (in. wg)									
	1.2		1.4		1.6		1.8		2.0	
	rpm	bhp	rpm	bhp	rpm	bhp	rpm	bhp	rpm	bhp
1200	1931	0.78	2061	0.95	2200	1.15	2363	1.43	2617	1.94
1300	1967	0.82	2087	0.98	2207	1.16	2332	1.37	2471	1.62
1400	2009	0.87	2123	1.03	2234	1.20	2345	1.38	2460	1.60
1500	2052	0.93	2164	1.09	2271	1.25	2375	1.43	2478	1.63
1600	2097	0.99	2208	1.15	2312	1.32	2412	1.50	2510	1.69
1700	2141	1.05	2252	1.22	2356	1.39	2454	1.58	2548	1.76
1800	2185	1.11	2297	1.29	2400	1.47	2497	1.66	2590	1.85
1900	2229	1.18	2341	1.36	2445	1.55	2542	1.75	2634	1.94
2000	2272	1.25	2385	1.44	2489	1.64	2586	1.84	—	—

Standard/Medium Static 1115-2170 rpm, 1.06 maximum bhp

High Static 1115-2660 rpm, 1.96 maximum bhp

50FE-A05 Three Phase — Standard/Medium Static — 4 Ton Vertical Supply (rpm - vdc)

CFM	AVAILABLE EXTERNAL STATIC PRESSURE (in. wg)									
	0.2		0.4		0.6		0.8		1.0	
	rpm	vdc	rpm	vdc	rpm	vdc	rpm	vdc	rpm	vdc
1200	1115	5.1	1332	6.1	1513	7.0	1665	7.7	1801	8.3
1300	1174	5.4	1376	6.3	1557	7.2	1709	7.9	1843	8.5
1400	1236	5.7	1422	6.6	1601	7.4	1754	8.1	1887	8.7
1500	1300	6.0	1471	6.8	1644	7.6	1798	8.3	1932	8.9
1600	1366	6.3	1524	7.0	1688	7.8	1841	8.5	1976	9.1
1700	1433	6.6	1579	7.3	1734	8.0	1884	8.7	2020	9.3
1800	1501	6.9	1637	7.5	1783	8.2	1928	8.9	2063	9.5
1900	1570	7.2	1698	7.8	1834	8.5	1973	9.1	2106	9.7
2000	1640	7.6	1761	8.1	1888	8.7	2020	9.3	2150	9.9

CFM	AVAILABLE EXTERNAL STATIC PRESSURE (in. wg)									
	1.2		1.4		1.6		1.8		2.0	
	rpm	vdc	rpm	vdc	rpm	vdc	rpm	vdc	rpm	vdc
1200	1931	8.9	2061	9.5	—	—	—	—	—	—
1300	1967	9.1	2087	9.6	—	—	—	—	—	—
1400	2009	9.3	2123	9.8	—	—	—	—	—	—
1500	2052	9.5	—	—	—	—	—	—	—	—
1600	2097	9.7	—	—	—	—	—	—	—	—
1700	2141	9.9	—	—	—	—	—	—	—	—
1800	—	—	—	—	—	—	—	—	—	—
1900	—	—	—	—	—	—	—	—	—	—
2000	—	—	—	—	—	—	—	—	—	—

Standard/Medium Static 1115-2170 rpm

50FE-A05 Three Phase — High Static — 4 Ton Vertical Supply (rpm - vdc)

CFM	AVAILABLE EXTERNAL STATIC PRESSURE (in. wg)									
	0.2		0.4		0.6		0.8		1.0	
	rpm	vdc	rpm	vdc	rpm	vdc	rpm	vdc	rpm	vdc
1200	1115	4.2	1332	5.0	1513	5.7	1665	6.3	1801	6.8
1300	1174	4.4	1376	5.2	1557	5.9	1709	6.4	1843	6.9
1400	1236	4.6	1422	5.3	1601	6.0	1754	6.6	1887	7.1
1500	1300	4.9	1471	5.5	1644	6.2	1798	6.8	1932	7.3
1600	1366	5.1	1524	5.7	1688	6.3	1841	6.9	1976	7.4
1700	1433	5.4	1579	5.9	1734	6.5	1884	7.1	2020	7.6
1800	1501	5.6	1637	6.2	1783	6.7	1928	7.2	2063	7.8
1900	1570	5.9	1698	6.4	1834	6.9	1973	7.4	2106	7.9
2000	1640	6.2	1761	6.6	1888	7.1	2020	7.6	2150	8.1

CFM	AVAILABLE EXTERNAL STATIC PRESSURE (in. wg)									
	1.2		1.4		1.6		1.8		2.0	
	rpm	vdc	rpm	vdc	rpm	vdc	rpm	vdc	rpm	vdc
1200	1931	7.3	2061	7.7	2200	8.3	2363	8.9	2617	9.8
1300	1967	7.4	2087	7.8	2207	8.3	2332	8.8	2471	9.3
1400	2009	7.6	2123	8.0	2234	8.4	2345	8.8	2460	9.2
1500	2052	7.7	2164	8.1	2271	8.5	2375	8.9	2478	9.3
1600	2097	7.9	2208	8.3	2312	8.7	2412	9.1	2510	9.4
1700	2141	8.0	2252	8.5	2356	8.9	2454	9.2	2548	9.6
1800	2185	8.2	2297	8.6	2400	9.0	2497	9.4	2590	9.7
1900	2229	8.4	2341	8.8	2445	9.2	2542	9.6	2634	9.9
2000	2272	8.5	2385	9.0	2489	9.4	2586	9.7	—	—

High Static 1115-2660 rpm

50FE-A06 Single Phase — 5 Ton Vertical Supply (rpm - bhp)

CFM	AVAILABLE EXTERNAL STATIC PRESSURE (in. wg)									
	0.2		0.4		0.6		0.8		1.0	
	rpm	bhp	rpm	bhp	rpm	bhp	rpm	bhp	rpm	bhp
1500	1301	0.24	1477	0.35	1639	0.47	1788	0.62	1925	0.77
1625	1381	0.28	1544	0.40	1700	0.53	1843	0.67	1976	0.83
1750	1463	0.34	1615	0.45	1763	0.59	1901	0.74	2031	0.90
1875	1548	0.40	1688	0.51	1829	0.65	1962	0.81	2088	0.97
2000	1633	0.46	1764	0.59	1897	0.73	2025	0.89	2147	1.06
2125	1720	0.54	1842	0.67	1968	0.81	2090	0.97	2208	1.15
2250	1808	0.63	1922	0.75	2040	0.90	2158	1.07	2271	1.24
2375	1897	0.72	2003	0.85	2115	1.00	2227	1.17	2336	1.35
2500	1987	0.83	2086	0.96	2192	1.12	2299	1.29	2403	1.47

CFM	AVAILABLE EXTERNAL STATIC PRESSURE (in. wg)									
	1.2		1.4		1.6		1.8		2.0	
	rpm	bhp	rpm	bhp	rpm	bhp	rpm	bhp	rpm	bhp
1500	2053	0.93	2174	1.11	2289	1.29	2398	1.49	2502	1.69
1625	2101	1.00	2220	1.18	2332	1.36	2439	1.56	2542	1.77
1750	2152	1.07	2268	1.25	2378	1.44	2483	1.64	2584	1.85
1875	2206	1.15	2318	1.33	2426	1.53	2529	1.73	2628	1.94
2000	2262	1.23	2372	1.42	2477	1.62	2578	1.83	—	—
2125	2320	1.33	2427	1.52	2530	1.72	2628	1.93	—	—
2250	2380	1.43	2485	1.63	2585	1.83	—	—	—	—
2375	2442	1.54	2544	1.75	2642	1.96	—	—	—	—
2500	2506	1.67	2605	1.87	—	—	—	—	—	—

Standard/Medium Static 1301-2390 rpm, 1.44 maximum bhp

High Static 1262-2660 rpm, 1.96 maximum bhp

50FE-A06 Single Phase — Standard/Medium Static — 3 Ton Vertical Supply (rpm - vdc)

CFM	AVAILABLE EXTERNAL STATIC PRESSURE (in. wg)									
	0.2		0.4		0.6		0.8		1.0	
	rpm	vdc	rpm	vdc	rpm	vdc	rpm	vdc	rpm	vdc
1500	1301	5.4	1476	6.2	1639	6.9	1788	7.5	1925	8.1
1625	1381	5.8	1545	6.5	1700	7.1	1843	7.7	1976	8.3
1750	1463	6.1	1615	6.8	1763	7.4	1901	8.0	2031	8.5
1875	1548	6.5	1688	7.1	1828	7.6	1962	8.2	2087	8.7
2000	1633	6.8	1764	7.4	1897	7.9	2025	8.5	2146	9.0
2125	1720	7.2	1842	7.7	1967	8.2	2090	8.7	2208	9.2
2250	1808	7.6	1922	8.0	2040	8.5	2157	9.0	2271	9.5
2375	1897	7.9	2003	8.4	2115	8.8	2227	9.3	2336	9.8
2500	1987	8.3	2086	8.7	2191	9.2	2298	9.6	—	—

CFM	AVAILABLE EXTERNAL STATIC PRESSURE (in. wg)									
	1.2		1.4		1.6		1.8		2.0	
	rpm	vdc	rpm	vdc	rpm	vdc	rpm	vdc	rpm	vdc
1500	2053	8.6	2174	9.1	2289	9.6	—	—	—	—
1625	2101	8.8	2220	9.3	2332	9.8	—	—	—	—
1750	2152	9.0	2268	9.5	2378	9.9	—	—	—	—
1875	2206	9.2	2318	9.7	—	—	—	—	—	—
2000	2262	9.5	2372	9.9	—	—	—	—	—	—
2125	2320	9.7	—	—	—	—	—	—	—	—
2250	2380	10.0	—	—	—	—	—	—	—	—
2375	—	—	—	—	—	—	—	—	—	—
2500	—	—	—	—	—	—	—	—	—	—

Standard/Medium Static 1301-2390 rpm

Fan data (cont)

50FE-A06 Single Phase — High Static — 5 Ton Vertical Supply (rpm - vdc)

CFM	AVAILABLE EXTERNAL STATIC PRESSURE (in. wg)									
	0.2		0.4		0.6		0.8		1.0	
	rpm	vdc	rpm	vdc	rpm	vdc	rpm	vdc	rpm	vdc
1500	1301	4.9	1477	5.6	1639	6.2	1788	6.7	1925	7.2
1625	1381	5.2	1544	5.8	1700	6.4	1843	6.9	1976	7.4
1750	1463	5.5	1615	6.1	1763	6.6	1901	7.1	2031	7.6
1875	1548	5.8	1688	6.3	1829	6.9	1962	7.4	2088	7.8
2000	1633	6.1	1764	6.6	1897	7.1	2025	7.6	2147	8.1
2125	1720	6.5	1842	6.9	1968	7.4	2090	7.9	2208	8.3
2250	1808	6.8	1922	7.2	2040	7.7	2158	8.1	2271	8.5
2375	1897	7.1	2003	7.5	2115	8.0	2227	8.4	2336	8.8
2500	1987	7.5	2086	7.8	2192	8.2	2299	8.6	2403	9.0

CFM	AVAILABLE EXTERNAL STATIC PRESSURE (in. wg)									
	1.2		1.4		1.6		1.8		2.0	
	rpm	vdc	rpm	vdc	rpm	vdc	rpm	vdc	rpm	vdc
1500	2053	7.7	2174	8.2	2289	8.6	2398	9.0	2502	9.4
1625	2101	7.9	2220	8.3	2332	8.8	2439	9.2	2542	9.6
1750	2152	8.1	2268	8.5	2378	8.9	2483	9.3	2584	9.7
1875	2206	8.3	2318	8.7	2426	9.1	2529	9.5	2628	9.9
2000	2262	8.5	2372	8.9	2477	9.3	2578	9.7	—	—
2125	2320	8.7	2427	9.1	2530	9.5	2628	9.9	—	—
2250	2380	8.9	2485	9.3	2585	9.7	—	—	—	—
2375	2442	9.2	2544	9.6	2642	9.9	—	—	—	—
2500	2506	9.4	2605	9.8	—	—	—	—	—	—

High Static 1301-2660 rpm

50FE-A06 Three Phase — 5 Ton Vertical Supply (rpm - bhp)

CFM	AVAILABLE EXTERNAL STATIC PRESSURE (in. wg)									
	0.2		0.4		0.6		0.8		1.0	
	rpm	bhp	rpm	bhp	rpm	bhp	rpm	bhp	rpm	bhp
1500	1301	0.24	1477	0.35	1639	0.47	1788	0.62	1925	0.77
1625	1381	0.28	1545	0.40	1700	0.53	1843	0.67	1977	0.83
1750	1463	0.34	1615	0.45	1763	0.59	1902	0.74	2031	0.90
1875	1548	0.40	1688	0.51	1829	0.65	1962	0.81	2088	0.97
2000	1633	0.46	1764	0.59	1897	0.73	2025	0.89	2147	1.06
2125	1720	0.54	1842	0.67	1968	0.81	2090	0.97	2208	1.15
2250	1809	0.63	1922	0.75	2040	0.90	2158	1.07	2271	1.24
2375	1897	0.72	2003	0.85	2115	1.00	2227	1.17	2336	1.35
2500	1987	0.83	2086	0.96	2192	1.12	2299	1.29	2403	1.47

CFM	AVAILABLE EXTERNAL STATIC PRESSURE (in. wg)									
	1.2		1.4		1.6		1.8		2.0	
	rpm	bhp	rpm	bhp	rpm	bhp	rpm	bhp	rpm	bhp
1500	2053	0.93	2174	1.11	2289	1.29	2398	1.49	2502	1.69
1625	2102	1.00	2220	1.18	2332	1.36	2439	1.56	2542	1.77
1750	2153	1.07	2268	1.25	2378	1.44	2483	1.64	2584	1.85
1875	2206	1.15	2319	1.33	2426	1.53	2529	1.73	2628	1.94
2000	2262	1.23	2372	1.42	2477	1.62	2578	1.83	2675	2.04
2125	2320	1.33	2427	1.52	2530	1.72	2629	1.93	2724	2.15
2250	2380	1.43	2485	1.63	2585	1.83	2682	2.05	2775	2.27
2375	2443	1.55	2544	1.75	2642	1.96	2737	2.17	2828	2.40
2500	2506	1.67	2605	1.87	2701	2.09	2794	2.31	—	—

Standard/Medium Static 1301-2390 rpm, 1.44 maximum bhp

High Static 1301-2836 rpm, 2.43 maximum bhp

50FE-A06 Three Phase — Standard/Medium Static — 5 Ton Vertical Supply (rpm - vdc)

CFM	AVAILABLE EXTERNAL STATIC PRESSURE (in. wg)									
	0.2		0.4		0.6		0.8		1.0	
	rpm	vdc	rpm	vdc	rpm	vdc	rpm	vdc	rpm	vdc
1500	1301	5.4	1477	6.2	1639	6.9	1788	7.5	1925	8.1
1625	1381	5.8	1545	6.5	1700	7.1	1843	7.7	1977	8.3
1750	1463	6.1	1615	6.8	1763	7.4	1902	8.0	2031	8.5
1875	1548	6.5	1688	7.1	1829	7.7	1962	8.2	2088	8.7
2000	1633	6.8	1764	7.4	1897	7.9	2025	8.5	2147	9.0
2125	1720	7.2	1842	7.7	1968	8.2	2090	8.7	2208	9.2
2250	1809	7.6	1922	8.0	2040	8.5	2158	9.0	2271	9.5
2375	1897	7.9	2003	8.4	2115	8.8	2227	9.3	2336	9.8
2500	1987	8.3	2086	8.7	2192	9.2	2299	9.6	—	—

CFM	AVAILABLE EXTERNAL STATIC PRESSURE (in. wg)									
	1.2		1.4		1.6		1.8		2.0	
	rpm	vdc	rpm	vdc	rpm	vdc	rpm	vdc	rpm	vdc
1500	2053	8.6	2174	9.1	2289	9.6	—	—	—	—
1625	2102	8.8	2220	9.3	2332	9.8	—	—	—	—
1750	2153	9.0	2268	9.5	2378	9.9	—	—	—	—
1875	2206	9.2	2319	9.7	—	—	—	—	—	—
2000	2262	9.5	2372	9.9	—	—	—	—	—	—
2125	2320	9.7	—	—	—	—	—	—	—	—
2250	2380	10.0	—	—	—	—	—	—	—	—
2375	—	—	—	—	—	—	—	—	—	—
2500	—	—	—	—	—	—	—	—	—	—

Standard/Medium Static 1301-2390 rpm

50FE-A06 Three Phase — High Static — 5 Ton Vertical Supply (rpm - vdc)

CFM	AVAILABLE EXTERNAL STATIC PRESSURE (in. wg)									
	0.2		0.4		0.6		0.8		1.0	
	rpm	vdc	rpm	vdc	rpm	vdc	rpm	vdc	rpm	vdc
1500	1301	4.6	1477	5.2	1639	5.8	1788	6.3	1925	6.8
1625	1381	4.9	1545	5.4	1700	6.0	1843	6.5	1977	7.0
1750	1463	5.2	1615	5.7	1763	6.2	1902	6.7	2031	7.2
1875	1548	5.5	1688	6.0	1829	6.4	1962	6.9	2088	7.4
2000	1633	5.8	1764	6.2	1897	6.7	2025	7.1	2147	7.6
2125	1720	6.1	1842	6.5	1968	6.9	2090	7.4	2208	7.8
2250	1809	6.4	1922	6.8	2040	7.2	2158	7.6	2271	8.0
2375	1897	6.7	2003	7.1	2115	7.5	2227	7.9	2336	8.2
2500	1987	7.0	2086	7.4	2192	7.7	2299	8.1	2403	8.5

CFM	AVAILABLE EXTERNAL STATIC PRESSURE (in. wg)									
	1.2		1.4		1.6		1.8		2.0	
	rpm	vdc	rpm	vdc	rpm	vdc	rpm	vdc	rpm	vdc
1500	2053	7.2	2174	7.7	2289	8.1	2398	8.5	2502	8.8
1625	2102	7.4	2220	7.8	2332	8.2	2439	8.6	2542	9.0
1750	2153	7.6	2268	8.0	2378	8.4	2483	8.8	2584	9.1
1875	2206	7.8	2319	8.2	2426	8.6	2529	8.9	2628	9.3
2000	2262	8.0	2372	8.4	2477	8.7	2578	9.1	2675	9.4
2125	2320	8.2	2427	8.6	2530	8.9	2629	9.3	2724	9.6
2250	2380	8.4	2485	8.8	2585	9.1	2682	9.5	2775	9.8
2375	2443	8.6	2544	9.0	2642	9.3	2737	9.7	2828	10.0
2500	2506	8.8	2605	9.2	2701	9.5	2794	9.9	—	—

High Static 1301-2836 rpm

50FE-M07 Three Phase — 6 Ton Vertical Supply (rpm - bhp)

CFM	AVAILABLE EXTERNAL STATIC PRESSURE (in. wg)									
	0.2		0.4		0.6		0.8		1.0	
	rpm	bhp	rpm	bhp	rpm	bhp	rpm	bhp	rpm	bhp
1800	1423	0.30	1550	0.39	1682	0.50	1820	0.64	1955	0.79
1950	1521	0.37	1638	0.46	1758	0.57	1883	0.70	2011	0.86
2100	1620	0.45	1730	0.54	1839	0.65	1953	0.78	2071	0.93
2250	1720	0.53	1824	0.64	1924	0.75	2029	0.88	2137	1.02
2400	1820	0.63	1919	0.74	2013	0.85	2109	0.98	2209	1.13
2550	1921	0.74	2016	0.86	2105	0.98	2194	1.11	2286	1.25
2700	2022	0.86	2113	0.99	2198	1.11	2282	1.24	2368	1.39
2850	2123	1.00	2212	1.13	2293	1.26	2373	1.40	2453	1.54
3000	2225	1.15	2311	1.29	2389	1.42	2465	1.56	2541	1.71

CFM	AVAILABLE EXTERNAL STATIC PRESSURE (in. wg)									
	1.2		1.4		1.6		1.8		2.0	
	rpm	bhp	rpm	bhp	rpm	bhp	rpm	bhp	rpm	bhp
1800	2079	0.95	2192	1.11	2296	1.28	2393	1.45	2485	1.62
1950	2133	1.02	2247	1.19	2353	1.37	2451	1.55	2543	1.73
2100	2189	1.10	2301	1.28	2408	1.47	2507	1.66	2601	1.85
2250	2248	1.19	2357	1.37	2462	1.57	2562	1.76	2656	1.97
2400	2312	1.30	2416	1.48	2517	1.67	2616	1.88	2711	2.09
2550	2381	1.41	2479	1.60	2576	1.79	2672	2.00	2765	2.21
2700	2456	1.55	2546	1.73	2638	1.92	2730	2.13	2821	2.35
2850	2535	1.70	2619	1.88	2705	2.07	2793	2.28	—	—
3000	2618	1.87	2696	2.05	2777	2.24	—	—	—	—

Standard/Medium Static 1423-2530 rpm, 1.76 maximum bhp

High Static 1423-2836 rpm, 2.43 maximum bhp

50FE-M07 Three Phase — Standard/Medium Static — 6 Ton Vertical Supply (rpm - vdc)

CFM	AVAILABLE EXTERNAL STATIC PRESSURE (in. wg)									
	0.2		0.4		0.6		0.8		1.0	
	rpm	vdc	rpm	vdc	rpm	vdc	rpm	vdc	rpm	vdc
1800	1423	5.6	1550	6.1	1682	6.6	1820	7.2	1955	7.7
1950	1521	6.0	1638	6.5	1758	6.9	1883	7.4	2011	7.9
2100	1620	6.4	1730	6.8	1839	7.3	1953	7.7	2071	8.2
2250	1720	6.8	1824	7.2	1924	7.6	2029	8.0	2137	8.4
2400	1820	7.2	1919	7.6	2013	8.0	2109	8.3	2209	8.7
2550	1921	7.6	2016	8.0	2105	8.3	2194	8.7	2286	9.0
2700	2022	8.0	2113	8.4	2198	8.7	2282	9.0	2368	9.4
2850	2123	8.4	2212	8.7	2293	9.1	2373	9.4	2453	9.7
3000	2225	8.8	2311	9.1	2389	9.4	2465	9.7	—	—

CFM	AVAILABLE EXTERNAL STATIC PRESSURE (in. wg)									
	1.2		1.4		1.6		1.8		2.0	
	rpm	vdc	rpm	vdc	rpm	vdc	rpm	vdc	rpm	vdc
1800	2079	8.2	2192	8.7	2296	9.1	2393	9.5	2485	9.8
1950	2133	8.4	2247	8.9	2353	9.3	2451	9.7	—	—
2100	2189	8.7	2301	9.1	2408	9.5	2507	9.9	—	—
2250	2248	8.9	2357	9.3	2462	9.7	—	—	—	—
2400	2312	9.1	2416	9.5	2517	9.9	—	—	—	—
2550	2381	9.4	2479	9.8	—	—	—	—	—	—
2700	2456	9.7	—	—	—	—	—	—	—	—
2850	—	—	—	—	—	—	—	—	—	—
3000	—	—	—	—	—	—	—	—	—	—

Standard/Medium Static 1423-2530 rpm

Fan data (cont)

50FE-M07 Three Phase — High Static — 6 Ton Vertical Supply (rpm - vdc)

CFM	AVAILABLE EXTERNAL STATIC PRESSURE (in. wg)									
	0.2		0.4		0.6		0.8		1.0	
	rpm	vdc	rpm	vdc	rpm	vdc	rpm	vdc	rpm	vdc
1800	1423	5.0	1550	5.5	1682	5.9	1820	6.4	1955	6.9
1950	1521	5.4	1638	5.8	1758	6.2	1883	6.6	2011	7.1
2100	1620	5.7	1730	6.1	1839	6.5	1953	6.9	2071	7.3
2250	1720	6.1	1824	6.4	1924	6.8	2029	7.2	2137	7.5
2400	1820	6.4	1919	6.8	2013	7.1	2109	7.4	2209	7.8
2550	1921	6.8	2016	7.1	2105	7.4	2194	7.7	2286	8.1
2700	2022	7.1	2113	7.5	2198	7.8	2282	8.0	2368	8.3
2850	2123	7.5	2212	7.8	2293	8.1	2373	8.4	2453	8.6
3000	2225	7.8	2311	8.1	2389	8.4	2465	8.7	2541	9.0

CFM	AVAILABLE EXTERNAL STATIC PRESSURE (in. wg)									
	1.2		1.4		1.6		1.8		2.0	
	rpm	vdc	rpm	vdc	rpm	vdc	rpm	vdc	rpm	vdc
1800	2079	7.3	2192	7.7	2296	8.1	2393	8.4	2485	8.8
1950	2133	7.5	2247	7.9	2353	8.3	2451	8.6	2543	9.0
2100	2189	7.7	2301	8.1	2408	8.5	2507	8.8	2601	9.2
2250	2248	7.9	2357	8.3	2462	8.7	2562	9.0	2656	9.4
2400	2312	8.2	2416	8.5	2517	8.9	2616	9.2	2711	9.6
2550	2381	8.4	2479	8.7	2576	9.1	2672	9.4	2765	9.7
2700	2456	8.7	2546	9.0	2638	9.3	2730	9.6	2821	9.9
2850	2535	8.9	2619	9.2	2705	9.5	2793	9.8	—	—
3000	2618	9.2	2696	9.5	2777	9.8	—	—	—	—

High Static 1423-2836 rpm

50FE-A04 Single Phase — 3 Ton Horizontal Supply (rpm - bhp)

CFM	AVAILABLE EXTERNAL STATIC PRESSURE (in. wg)									
	0.2		0.4		0.6		0.8		1.0	
	rpm	bhp	rpm	bhp	rpm	bhp	rpm	bhp	rpm	bhp
900	1017	0.07	1284	0.15	1501	0.24	1684	0.33	1843	0.44
975	1055	0.08	1311	0.16	1527	0.25	1711	0.35	1871	0.46
1050	1096	0.09	1340	0.17	1553	0.26	1737	0.36	1899	0.48
1125	1140	0.10	1371	0.18	1580	0.27	1763	0.38	1925	0.50
1200	1186	0.12	1404	0.19	1608	0.29	1789	0.40	1951	0.52
1275	1236	0.13	1440	0.21	1637	0.31	1816	0.42	1977	0.54
1350	1286	0.15	1477	0.22	1666	0.32	1843	0.44	2004	0.56
1425	1338	0.17	1517	0.24	1698	0.34	1871	0.46	2030	0.58
1500	1391	0.19	1559	0.26	1733	0.36	1900	0.48	2057	0.61

CFM	AVAILABLE EXTERNAL STATIC PRESSURE (in. wg)									
	1.2		1.4		1.6		1.8		2.0	
	rpm	bhp	rpm	bhp	rpm	bhp	rpm	bhp	rpm	bhp
900	1984	0.54	2113	0.66	2231	0.77	2342	0.89	2446	1.02
975	2014	0.57	2144	0.69	2264	0.81	2376	0.93	2481	1.06
1050	2043	0.59	2174	0.72	2295	0.84	2408	0.97	—	—
1125	2071	0.62	2203	0.74	2325	0.88	2439	1.01	—	—
1200	2098	0.64	2231	0.77	2354	0.91	2469	1.05	—	—
1275	2124	0.67	2258	0.80	2382	0.94	—	—	—	—
1350	2150	0.69	2285	0.83	2410	0.97	—	—	—	—
1425	2176	0.72	2311	0.86	2436	1.01	—	—	—	—
1500	2202	0.74	2337	0.89	2462	1.04	—	—	—	—

Standard/Medium Static 1017-2190 rpm, 0.71 maximum bhp

High Static 1017-2490 rpm, 1.07 maximum bhp

50FE-A04 Single Phase — Standard/Medium Static — 3 Ton Horizontal Supply (rpm - vdc)

CFM	AVAILABLE EXTERNAL STATIC PRESSURE (in. wg)									
	0.2		0.4		0.6		0.8		1.0	
	rpm	vdc	rpm	vdc	rpm	vdc	rpm	vdc	rpm	vdc
900	1017	4.6	1284	5.9	1501	6.9	1684	7.7	1843	8.4
975	1055	4.8	1311	6.0	1527	7.0	1711	7.8	1871	8.5
1050	1096	5.0	1340	6.1	1553	7.1	1737	7.9	1899	8.7
1125	1140	5.2	1371	6.3	1580	7.2	1763	8.1	1925	8.8
1200	1186	5.4	1404	6.4	1608	7.3	1789	8.2	1951	8.9
1275	1236	5.6	1440	6.6	1637	7.5	1816	8.3	1977	9.0
1350	1286	5.9	1477	6.7	1666	7.6	1843	8.4	2004	9.2
1425	1338	6.1	1517	6.9	1698	7.8	1871	8.5	2030	9.3
1500	1391	6.4	1559	7.1	1733	7.9	1900	8.7	2057	9.4

CFM	AVAILABLE EXTERNAL STATIC PRESSURE (in. wg)									
	1.2		1.4		1.6		1.8		2.0	
	rpm	vdc	rpm	vdc	rpm	vdc	rpm	vdc	rpm	vdc
900	1984	9.1	2113	9.6	—	—	—	—	—	—
975	2014	9.2	2144	9.8	—	—	—	—	—	—
1050	2043	9.3	—	—	—	—	—	—	—	—
1125	2071	9.5	—	—	—	—	—	—	—	—
1200	2098	9.6	—	—	—	—	—	—	—	—
1275	2124	9.7	—	—	—	—	—	—	—	—
1350	2150	9.8	—	—	—	—	—	—	—	—
1425	—	—	—	—	—	—	—	—	—	—
1500	—	—	—	—	—	—	—	—	—	—

Standard/Medium Static 1017-2190 rpm

50FE-A04 Single Phase — High Static — 3 Ton Horizontal Supply (rpm - vdc)

CFM	AVAILABLE EXTERNAL STATIC PRESSURE (in. wg)									
	0.2		0.4		0.6		0.8		1.0	
	rpm	vdc	rpm	vdc	rpm	vdc	rpm	vdc	rpm	vdc
900	1017	4.1	1284	5.2	1501	6.0	1684	6.8	1843	7.4
975	1055	4.2	1311	5.3	1527	6.1	1711	6.9	1871	7.5
1050	1096	4.4	1340	5.4	1553	6.2	1737	7.0	1899	7.6
1125	1140	4.6	1371	5.5	1580	6.3	1763	7.1	1925	7.7
1200	1186	4.8	1404	5.6	1608	6.5	1789	7.2	1951	7.8
1275	1236	5.0	1440	5.8	1637	6.6	1816	7.3	1977	7.9
1350	1286	5.2	1477	5.9	1666	6.7	1843	7.4	2004	8.0
1425	1338	5.4	1517	6.1	1698	6.8	1871	7.5	2030	8.2
1500	1391	5.6	1559	6.3	1733	7.0	1900	7.6	2057	8.3

CFM	AVAILABLE EXTERNAL STATIC PRESSURE (in. wg)									
	1.2		1.4		1.6		1.8		2.0	
	rpm	vdc	rpm	vdc	rpm	vdc	rpm	vdc	rpm	vdc
900	1984	8.0	2113	8.5	2231	9.0	2342	9.4	2446	9.8
975	2014	8.1	2144	8.6	2264	9.1	2376	9.5	2481	10.0
1050	2043	8.2	2174	8.7	2295	9.2	2408	9.7	—	—
1125	2071	8.3	2203	8.8	2325	9.3	2439	9.8	—	—
1200	2098	8.4	2231	9.0	2354	9.5	2469	9.9	—	—
1275	2124	8.5	2258	9.1	2382	9.6	—	—	—	—
1350	2150	8.6	2285	9.2	2410	9.7	—	—	—	—
1425	2176	8.7	2311	9.3	2436	9.8	—	—	—	—
1500	2202	8.8	2337	9.4	2462	9.9	—	—	—	—

High Static 1017-2490 rpm

50FE-A04 Three Phase — 3 Ton Horizontal Supply (rpm - bhp)

CFM	AVAILABLE EXTERNAL STATIC PRESSURE (in. wg)									
	0.2		0.4		0.6		0.8		1.0	
	rpm	bhp	rpm	bhp	rpm	bhp	rpm	bhp	rpm	bhp
900	1017	0.07	1284	0.15	1501	0.24	1684	0.33	1843	0.44
975	1055	0.08	1311	0.16	1527	0.25	1711	0.35	1871	0.46
1050	1096	0.09	1340	0.17	1553	0.26	1737	0.36	1899	0.48
1125	1140	0.10	1371	0.18	1580	0.27	1763	0.38	1925	0.50
1200	1186	0.12	1404	0.19	1608	0.29	1789	0.40	1951	0.52
1275	1236	0.13	1440	0.21	1637	0.31	1816	0.42	1977	0.54
1350	1286	0.15	1477	0.22	1666	0.32	1843	0.44	2004	0.56
1425	1338	0.17	1517	0.24	1698	0.34	1871	0.46	2030	0.58
1500	1391	0.19	1559	0.26	1733	0.36	1900	0.48	2057	0.61

CFM	AVAILABLE EXTERNAL STATIC PRESSURE (in. wg)									
	1.2		1.4		1.6		1.8		2.0	
	rpm	bhp	rpm	bhp	rpm	bhp	rpm	bhp	rpm	bhp
900	1984	0.54	2113	0.66	2231	0.77	2342	0.89	2446	1.02
975	2014	0.57	2144	0.69	2264	0.81	2376	0.93	2481	1.06
1050	2043	0.59	2174	0.72	2295	0.84	2408	0.97	—	—
1125	2071	0.62	2203	0.74	2325	0.88	2439	1.01	—	—
1200	2098	0.64	2231	0.77	2354	0.91	2469	1.05	—	—
1275	2124	0.67	2258	0.80	2382	0.94	—	—	—	—
1350	2150	0.69	2285	0.83	2410	0.97	—	—	—	—
1425	2176	0.72	2311	0.86	2436	1.01	—	—	—	—
1500	2202	0.74	2337	0.89	2462	1.04	—	—	—	—

Standard/Medium Static 1017-2190 rpm, 0.71 maximum bhp

High Static 1017-2490 rpm, 1.07 maximum bhp

50FE-A04 Three Phase — Standard/Medium Static — 3 Ton Horizontal Supply (rpm - vdc)

CFM	AVAILABLE EXTERNAL STATIC PRESSURE (in. wg)									
	0.2		0.4		0.6		0.8		1.0	
	rpm	vdc	rpm	vdc	rpm	vdc	rpm	vdc	rpm	vdc
900	1017	4.6	1284	5.9	1501	6.9	1684	7.7	1843	8.4
975	1055	4.8	1311	6.0	1527	7.0	1711	7.8	1871	8.5
1050	1096	5.0	1340	6.1	1553	7.1	1737	7.9	1899	8.7
1125	1140	5.2	1371	6.3	1580	7.2	1763	8.1	1925	8.8
1200	1186	5.4	1404	6.4	1608	7.3	1789	8.2	1951	8.9
1275	1236	5.6	1440	6.6	1637	7.5	1816	8.3	1977	9.0
1350	1286	5.9	1477	6.7	1666	7.6	1843	8.4	2004	9.2
1425	1338	6.1	1517	6.9	1698	7.8	1871	8.5	2030	9.3
1500	1391	6.4	1559	7.1	1733	7.9	1900	8.7	2057	9.4

CFM	AVAILABLE EXTERNAL STATIC PRESSURE (in. wg)									
	1.2		1.4		1.6		1.8		2.0	
	rpm	vdc	rpm	vdc	rpm	vdc	rpm	vdc	rpm	vdc
900	1984	9.1	2113	9.6	—	—	—	—	—	—
975	2014	9.2	2144	9.8	—	—	—	—	—	—
1050	2043	9.3	—	—	—	—	—	—	—	—
1125	2071	9.5	—	—	—	—	—	—	—	—
1200	2098	9.6	—	—	—	—	—	—	—	—
1275	2124	9.7	—	—	—	—	—	—	—	—
1350	2150	9.8	—	—	—	—	—	—	—	—
1425	—	—	—	—	—	—	—	—	—	—
1500	—	—	—	—	—	—	—	—	—	—

Standard/Medium Static 1017-2190 rpm

Fan data (cont)

50FE-A04 Three Phase — High Static — 3 Ton Horizontal Supply (rpm - vdc)

CFM	AVAILABLE EXTERNAL STATIC PRESSURE (in. wg)									
	0.2		0.4		0.6		0.8		1.0	
	rpm	vdc	rpm	vdc	rpm	vdc	rpm	vdc	rpm	vdc
900	1017	4.1	1284	5.2	1501	6.0	1684	6.8	1843	7.4
975	1055	4.2	1311	5.3	1527	6.1	1711	6.9	1871	7.5
1050	1096	4.4	1340	5.4	1553	6.2	1737	7.0	1899	7.6
1125	1140	4.6	1371	5.5	1580	6.3	1763	7.1	1925	7.7
1200	1186	4.8	1404	5.6	1608	6.5	1789	7.2	1951	7.8
1275	1236	5.0	1440	5.8	1637	6.6	1816	7.3	1977	7.9
1350	1286	5.2	1477	5.9	1666	6.7	1843	7.4	2004	8.0
1425	1338	5.4	1517	6.1	1698	6.8	1871	7.5	2030	8.2
1500	1391	5.6	1559	6.3	1733	7.0	1900	7.6	2057	8.3

CFM	AVAILABLE EXTERNAL STATIC PRESSURE (in. wg)									
	1.2		1.4		1.6		1.8		2.0	
	rpm	vdc	rpm	vdc	rpm	vdc	rpm	vdc	rpm	vdc
900	1984	8.0	2113	8.5	2231	9.0	2342	9.4	2446	9.8
975	2014	8.1	2144	8.6	2264	9.1	2376	9.5	2481	10.0
1050	2043	8.2	2174	8.7	2295	9.2	2408	9.7	—	—
1125	2071	8.3	2203	8.8	2325	9.3	2439	9.8	—	—
1200	2098	8.4	2231	9.0	2354	9.5	2469	9.9	—	—
1275	2124	8.5	2258	9.1	2382	9.6	—	—	—	—
1350	2150	8.6	2285	9.2	2410	9.7	—	—	—	—
1425	2176	8.7	2311	9.3	2436	9.8	—	—	—	—
1500	2202	8.8	2337	9.4	2462	9.9	—	—	—	—

High Static 1017-2490 rpm

50FE-A05 Single Phase — 4 Ton Horizontal Supply (rpm - bhp)

CFM	AVAILABLE EXTERNAL STATIC PRESSURE (in. wg)									
	0.2		0.4		0.6		0.8		1.0	
	rpm	bhp	rpm	bhp	rpm	bhp	rpm	bhp	rpm	bhp
1200	1092	0.14	1306	0.24	1497	0.35	1667	0.49	1819	0.64
1300	1148	0.16	1348	0.26	1533	0.38	1700	0.52	1851	0.67
1400	1207	0.18	1394	0.28	1571	0.41	1734	0.55	1882	0.70
1500	1267	0.21	1442	0.31	1612	0.44	1770	0.58	1916	0.73
1600	1329	0.24	1493	0.35	1655	0.47	1808	0.61	1951	0.77
1700	1393	0.28	1546	0.38	1700	0.51	1848	0.65	1988	0.81
1800	1458	0.32	1602	0.42	1748	0.55	1890	0.70	2026	0.86
1900	1523	0.36	1659	0.47	1797	0.60	1934	0.75	2066	0.91
2000	1590	0.41	1719	0.52	1849	0.65	1980	0.80	2108	0.96

CFM	AVAILABLE EXTERNAL STATIC PRESSURE (in. wg)									
	1.2		1.4		1.6		1.8		2.0	
	rpm	bhp	rpm	bhp	rpm	bhp	rpm	bhp	rpm	bhp
1200	1959	0.79	2089	0.96	2211	1.14	2327	1.33	2438	1.53
1300	1988	0.83	2117	1.00	2238	1.18	2352	1.37	—	—
1400	2020	0.86	2146	1.03	2266	1.22	2379	1.41	—	—
1500	2051	0.90	2177	1.08	2296	1.26	2408	1.46	—	—
1600	2084	0.94	2209	1.12	2327	1.31	2438	1.51	—	—
1700	2119	0.99	2242	1.17	2358	1.36	—	—	—	—
1800	2154	1.03	2276	1.22	2391	1.41	—	—	—	—
1900	2191	1.08	2311	1.27	2424	1.47	—	—	—	—
2000	2230	1.14	2347	1.33	2459	1.53	—	—	—	—

Standard/Medium Static 1092-2170 rpm, 1.06 maximum bhp

High Static 1092-2460 rpm, 1.53 maximum bhp

50FE-A05 Single Phase — Standard/Medium Static — 4 Ton Horizontal Supply (rpm - vdc)

CFM	AVAILABLE EXTERNAL STATIC PRESSURE (in. wg)									
	0.2		0.4		0.6		0.8		1.0	
	rpm	vdc	rpm	vdc	rpm	vdc	rpm	vdc	rpm	vdc
1200	1092	5.0	1306	6.0	1497	6.9	1667	7.7	1819	8.4
1300	1148	5.3	1348	6.2	1533	7.1	1700	7.8	1851	8.5
1400	1207	5.6	1394	6.4	1571	7.2	1734	8.0	1882	8.7
1500	1267	5.8	1442	6.6	1612	7.4	1770	8.2	1916	8.8
1600	1329	6.1	1493	6.9	1655	7.6	1808	8.3	1951	9.0
1700	1393	6.4	1546	7.1	1700	7.8	1848	8.5	1988	9.2
1800	1458	6.7	1602	7.4	1748	8.1	1890	8.7	2026	9.3
1900	1523	7.0	1659	7.6	1797	8.3	1934	8.9	2066	9.5
2000	1590	7.3	1719	7.9	1849	8.5	1980	9.1	2108	9.7

CFM	AVAILABLE EXTERNAL STATIC PRESSURE (in. wg)									
	1.2		1.4		1.6		1.8		2.0	
	rpm	vdc	rpm	vdc	rpm	vdc	rpm	vdc	rpm	vdc
1200	1959	9.0	2089	9.6	—	—	—	—	—	—
1300	1988	9.2	2117	9.8	—	—	—	—	—	—
1400	2020	9.3	2146	9.9	—	—	—	—	—	—
1500	2051	9.5	—	—	—	—	—	—	—	—
1600	2084	9.6	—	—	—	—	—	—	—	—
1700	2119	9.8	—	—	—	—	—	—	—	—
1800	2154	9.9	—	—	—	—	—	—	—	—
1900	—	—	—	—	—	—	—	—	—	—
2000	—	—	—	—	—	—	—	—	—	—

Standard/Medium Static 1092-2170 rpm

Fan data (cont)

50FE-A05 Single Phase — High Static — 4 Ton Horizontal Supply (rpm - vdc)

CFM	AVAILABLE EXTERNAL STATIC PRESSURE (in. wg)									
	0.2		0.4		0.6		0.8		1.0	
	rpm	vdc	rpm	vdc	rpm	vdc	rpm	vdc	rpm	vdc
1200	1092	4.4	1306	5.3	1497	6.1	1667	6.8	1819	7.4
1300	1148	4.7	1348	5.5	1533	6.2	1700	6.9	1851	7.5
1400	1207	4.9	1394	5.7	1571	6.4	1734	7.0	1882	7.7
1500	1267	5.2	1442	5.9	1612	6.6	1770	7.2	1916	7.8
1600	1329	5.4	1493	6.1	1655	6.7	1808	7.3	1951	7.9
1700	1393	5.7	1546	6.3	1700	6.9	1848	7.5	1988	8.1
1800	1458	5.9	1602	6.5	1748	7.1	1890	7.7	2026	8.2
1900	1523	6.2	1659	6.7	1797	7.3	1934	7.9	2066	8.4
2000	1590	6.5	1719	7.0	1849	7.5	1980	8.0	2108	8.6

CFM	AVAILABLE EXTERNAL STATIC PRESSURE (in. wg)									
	1.2		1.4		1.6		1.8		2.0	
	rpm	vdc	rpm	vdc	rpm	vdc	rpm	vdc	rpm	vdc
1200	1959	8.0	2089	8.5	2211	9.0	2327	9.5	2438	9.9
1300	1988	8.1	2117	8.6	2238	9.1	2352	9.6	—	—
1400	2020	8.2	2146	8.7	2266	9.2	2379	9.7	—	—
1500	2051	8.3	2177	8.8	2296	9.3	2408	9.8	—	—
1600	2084	8.5	2209	9.0	2327	9.5	2438	9.9	—	—
1700	2119	8.6	2242	9.1	2358	9.6	—	—	—	—
1800	2154	8.8	2276	9.3	2391	9.7	—	—	—	—
1900	2191	8.9	2311	9.4	2424	9.9	—	—	—	—
2000	2230	9.1	2347	9.5	2459	10.0	—	—	—	—

High Static 1092-2460 rpm

50FE-A05 Three Phase — 4 Ton Horizontal Supply (rpm - bhp)

CFM	AVAILABLE EXTERNAL STATIC PRESSURE (in. wg)									
	0.2		0.4		0.6		0.8		1.0	
	rpm	bhp	rpm	bhp	rpm	bhp	rpm	bhp	rpm	bhp
1200	1093	0.14	1306	0.24	1497	0.35	1667	0.49	1819	0.64
1300	1148	0.16	1348	0.26	1533	0.38	1700	0.52	1850	0.67
1400	1206	0.18	1393	0.28	1571	0.41	1734	0.55	1883	0.70
1500	1266	0.21	1442	0.31	1612	0.44	1770	0.58	1916	0.73
1600	1329	0.24	1493	0.35	1655	0.47	1808	0.61	1951	0.77
1700	1393	0.28	1546	0.38	1700	0.51	1848	0.65	1988	0.81
1800	1458	0.32	1602	0.42	1747	0.55	1890	0.70	2026	0.86
1900	1523	0.36	1659	0.47	1797	0.60	1934	0.75	2066	0.91
2000	1590	0.41	1718	0.52	1849	0.65	1980	0.80	2108	0.96

CFM	AVAILABLE EXTERNAL STATIC PRESSURE (in. wg)									
	1.2		1.4		1.6		1.8		2.0	
	rpm	bhp	rpm	bhp	rpm	bhp	rpm	bhp	rpm	bhp
1200	1959	0.79	2089	0.96	2211	1.14	2327	1.33	2438	1.53
1300	1988	0.83	2117	1.00	2238	1.18	2352	1.37	2462	1.57
1400	2019	0.86	2146	1.03	2266	1.22	2379	1.41	2487	1.61
1500	2052	0.90	2177	1.08	2296	1.26	2408	1.46	2515	1.66
1600	2084	0.94	2209	1.12	2327	1.31	2438	1.51	2544	1.71
1700	2119	0.99	2242	1.17	2358	1.36	2469	1.56	2574	1.77
1800	2154	1.03	2276	1.22	2391	1.41	2500	1.61	2605	1.83
1900	2191	1.08	2311	1.27	2424	1.47	2533	1.68	2636	1.89
2000	2230	1.14	2347	1.33	2459	1.53	2566	1.74	—	—

Standard/Medium Static 1093-2170 rpm, 1.06 maximum bhp

High Static 1093-2660 rpm, 1.96 maximum bhp

50FE-A05 Three Phase — Standard/Medium Static — 4 Ton Horizontal Supply (rpm - vdc)

CFM	AVAILABLE EXTERNAL STATIC PRESSURE (in. wg)									
	0.2		0.4		0.6		0.8		1.0	
	rpm	vdc	rpm	vdc	rpm	vdc	rpm	vdc	rpm	vdc
1200	1093	5.0	1306	6.0	1497	6.9	1667	7.7	1819	8.4
1300	1148	5.3	1348	6.2	1533	7.1	1700	7.8	1850	8.5
1400	1206	5.6	1393	6.4	1571	7.2	1734	8.0	1883	8.7
1500	1266	5.8	1442	6.6	1612	7.4	1770	8.2	1916	8.8
1600	1329	6.1	1493	6.9	1655	7.6	1808	8.3	1951	9.0
1700	1393	6.4	1546	7.1	1700	7.8	1848	8.5	1988	9.2
1800	1458	6.7	1602	7.4	1747	8.1	1890	8.7	2026	9.3
1900	1523	7.0	1659	7.6	1797	8.3	1934	8.9	2066	9.5
2000	1590	7.3	1718	7.9	1849	8.5	1980	9.1	2108	9.7

CFM	AVAILABLE EXTERNAL STATIC PRESSURE (in. wg)									
	1.2		1.4		1.6		1.8		2.0	
	rpm	vdc	rpm	vdc	rpm	vdc	rpm	vdc	rpm	vdc
1200	1959	9.0	2089	9.6	—	—	—	—	—	—
1300	1988	9.2	2117	9.8	—	—	—	—	—	—
1400	2019	9.3	2146	9.9	—	—	—	—	—	—
1500	2052	9.5	—	—	—	—	—	—	—	—
1600	2084	9.6	—	—	—	—	—	—	—	—
1700	2119	9.8	—	—	—	—	—	—	—	—
1800	2154	9.9	—	—	—	—	—	—	—	—
1900	—	—	—	—	—	—	—	—	—	—
2000	—	—	—	—	—	—	—	—	—	—

Standard/Medium Static 1093-2170 rpm

50FE-A05 Three Phase — High Static — 4 Ton Horizontal Supply (rpm - vdc)

CFM	AVAILABLE EXTERNAL STATIC PRESSURE (in. wg)									
	0.2		0.4		0.6		0.8		1.0	
	rpm	vdc	rpm	vdc	rpm	vdc	rpm	vdc	rpm	vdc
1200	1093	4.1	1306	4.9	1497	5.6	1667	6.3	1819	6.8
1300	1148	4.3	1348	5.1	1533	5.8	1700	6.4	1850	7.0
1400	1206	4.5	1393	5.2	1571	5.9	1734	6.5	1883	7.1
1500	1266	4.8	1442	5.4	1612	6.1	1770	6.7	1916	7.2
1600	1329	5.0	1493	5.6	1655	6.2	1808	6.8	1951	7.3
1700	1393	5.2	1546	5.8	1700	6.4	1848	6.9	1988	7.5
1800	1458	5.5	1602	6.0	1747	6.6	1890	7.1	2026	7.6
1900	1523	5.7	1659	6.2	1797	6.8	1934	7.3	2066	7.8
2000	1590	6.0	1718	6.5	1849	7.0	1980	7.4	2108	7.9

CFM	AVAILABLE EXTERNAL STATIC PRESSURE (in. wg)									
	1.2		1.4		1.6		1.8		2.0	
	rpm	vdc	rpm	vdc	rpm	vdc	rpm	vdc	rpm	vdc
1200	1959	7.4	2089	7.9	2211	8.3	2327	8.7	2438	9.2
1300	1988	7.5	2117	8.0	2238	8.4	2352	8.8	2462	9.3
1400	2019	7.6	2146	8.1	2266	8.5	2379	8.9	2487	9.3
1500	2052	7.7	2177	8.2	2296	8.6	2408	9.1	2515	9.5
1600	2084	7.8	2209	8.3	2327	8.7	2438	9.2	2544	9.6
1700	2119	8.0	2242	8.4	2358	8.9	2469	9.3	2574	9.7
1800	2154	8.1	2276	8.6	2391	9.0	2500	9.4	2605	9.8
1900	2191	8.2	2311	8.7	2424	9.1	2533	9.5	2636	9.9
2000	2230	8.4	2347	8.8	2459	9.2	2566	9.6	—	—

High Static 1093-2660 rpm

50FE-A06 Single Phase — 5 Ton Horizontal Supply (rpm - bhp)

CFM	AVAILABLE EXTERNAL STATIC PRESSURE (in. wg)									
	0.2		0.4		0.6		0.8		1.0	
	rpm	bhp	rpm	bhp	rpm	bhp	rpm	bhp	rpm	bhp
1500	1267	0.21	1442	0.31	1612	0.44	1770	0.58	1916	0.73
1625	1345	0.25	1506	0.35	1666	0.48	1818	0.62	1960	0.78
1750	1425	0.30	1573	0.40	1723	0.53	1868	0.67	2006	0.84
1875	1507	0.35	1644	0.46	1785	0.59	1923	0.73	2055	0.90
2000	1590	0.41	1718	0.52	1849	0.65	1980	0.80	2107	0.96
2125	1674	0.48	1794	0.59	1917	0.72	2041	0.87	2162	1.04
2250	1759	0.56	1871	0.67	1987	0.80	2104	0.95	2220	1.12
2375	1845	0.64	1951	0.76	2060	0.89	2170	1.05	2281	1.21
2500	1931	0.74	2031	0.86	2134	0.99	2239	1.15	2344	1.32

CFM	AVAILABLE EXTERNAL STATIC PRESSURE (in. wg)									
	1.2		1.4		1.6		1.8		2.0	
	rpm	bhp	rpm	bhp	rpm	bhp	rpm	bhp	rpm	bhp
1500	2051	0.90	2177	1.08	2295	1.26	2407	1.45	2514	1.66
1625	2092	0.95	2217	1.13	2334	1.32	2445	1.52	2551	1.72
1750	2136	1.01	2258	1.19	2374	1.38	2484	1.59	2588	1.79
1875	2182	1.07	2302	1.26	2415	1.45	2524	1.66	2628	1.87
2000	2230	1.14	2347	1.33	2459	1.53	2566	1.74	—	—
2125	2281	1.22	2395	1.41	2505	1.61	2609	1.82	—	—
2250	2334	1.30	2445	1.50	2552	1.70	2655	1.92	—	—
2375	2390	1.40	2497	1.59	2601	1.80	—	—	—	—
2500	2449	1.50	2552	1.70	2653	1.91	—	—	—	—

Standard/Medium Static 1267-2390 rpm, 1.44 maximum bhp

High Static 1267-2660 rpm, 1.96 maximum bhp

50FE-A06 Single Phase — Standard/Medium Static — 5 Ton Horizontal Supply (rpm - vdc)

CFM	AVAILABLE EXTERNAL STATIC PRESSURE (in. wg)									
	0.2		0.4		0.6		0.8		1.0	
	rpm	vdc	rpm	vdc	rpm	vdc	rpm	vdc	rpm	vdc
1500	1267	5.3	1442	6.0	1612	6.7	1770	7.4	1916	8.0
1625	1345	5.6	1506	6.3	1666	7.0	1818	7.6	1960	8.2
1750	1425	6.0	1574	6.6	1723	7.2	1869	7.8	2006	8.4
1875	1507	6.3	1644	6.9	1785	7.5	1923	8.0	2056	8.6
2000	1590	6.7	1719	7.2	1849	7.7	1980	8.3	2108	8.8
2125	1674	7.0	1794	7.5	1917	8.0	2041	8.5	2163	9.1
2250	1760	7.4	1872	7.8	1987	8.3	2104	8.8	2221	9.3
2375	1845	7.7	1951	8.2	2060	8.6	2171	9.1	2281	9.5
2500	1932	8.1	2032	8.5	2135	8.9	2239	9.4	2345	9.8

CFM	AVAILABLE EXTERNAL STATIC PRESSURE (in. wg)									
	1.2		1.4		1.6		1.8		2.0	
	rpm	vdc	rpm	vdc	rpm	vdc	rpm	vdc	rpm	vdc
1500	2051	8.6	2177	9.1	2296	9.6	—	—	—	—
1625	2093	8.8	2217	9.3	2334	9.8	—	—	—	—
1750	2136	8.9	2259	9.5	2374	9.9	—	—	—	—
1875	2182	9.1	2302	9.6	—	—	—	—	—	—
2000	2230	9.3	2347	9.8	—	—	—	—	—	—
2125	2281	9.5	—	—	—	—	—	—	—	—
2250	2334	9.8	—	—	—	—	—	—	—	—
2375	—	—	—	—	—	—	—	—	—	—
2500	—	—	—	—	—	—	—	—	—	—

Standard/Medium Static 1267-2390 rpm

Fan data (cont)

50FE-A06 Single Phase — High Static — 5 Ton Horizontal Supply (rpm - vdc)

CFM	AVAILABLE EXTERNAL STATIC PRESSURE (in. wg)									
	0.2		0.4		0.6		0.8		1.0	
	rpm	vdc	rpm	vdc	rpm	vdc	rpm	vdc	rpm	vdc
1500	1267	4.8	1442	5.4	1612	6.1	1770	6.7	1916	7.2
1625	1345	5.1	1506	5.7	1666	6.3	1818	6.8	1960	7.4
1750	1425	5.4	1573	5.9	1723	6.5	1868	7.0	2006	7.5
1875	1507	5.7	1644	6.2	1785	6.7	1923	7.2	2055	7.7
2000	1590	6.0	1718	6.5	1849	7.0	1980	7.4	2107	7.9
2125	1674	6.3	1794	6.7	1917	7.2	2041	7.7	2162	8.1
2250	1759	6.6	1871	7.0	1987	7.5	2104	7.9	2220	8.3
2375	1845	6.9	1951	7.3	2060	7.7	2170	8.2	2281	8.6
2500	1931	7.3	2031	7.6	2134	8.0	2239	8.4	2344	8.8

CFM	AVAILABLE EXTERNAL STATIC PRESSURE (in. wg)									
	1.2		1.4		1.6		1.8		2.0	
	rpm	vdc	rpm	vdc	rpm	vdc	rpm	vdc	rpm	vdc
1500	2051	7.7	2177	8.2	2295	8.6	2407	9.0	2514	9.5
1625	2092	7.9	2217	8.3	2334	8.8	2445	9.2	2551	9.6
1750	2136	8.0	2258	8.5	2374	8.9	2484	9.3	2588	9.7
1875	2182	8.2	2302	8.7	2415	9.1	2524	9.5	2628	9.9
2000	2230	8.4	2347	8.8	2459	9.2	2566	9.6	—	—
2125	2281	8.6	2395	9.0	2505	9.4	2609	9.8	—	—
2250	2334	8.8	2445	9.2	2552	9.6	2655	10.0	—	—
2375	2390	9.0	2497	9.4	2601	9.8	—	—	—	—
2500	2449	9.2	2552	9.6	2653	10.0	—	—	—	—

High Static 1267-2660 rpm

Fan data (cont)

50FE-A06 Three Phase — 5 Ton Horizontal Supply (rpm - bhp)

CFM	AVAILABLE EXTERNAL STATIC PRESSURE (in. wg)									
	0.2		0.4		0.6		0.8		1.0	
	rpm	bhp	rpm	bhp	rpm	bhp	rpm	bhp	rpm	bhp
1500	1267	0.21	1442	0.31	1612	0.44	1770	0.58	1916	0.73
1625	1345	0.25	1506	0.35	1666	0.48	1818	0.62	1960	0.78
1750	1425	0.30	1574	0.40	1723	0.53	1869	0.68	2006	0.84
1875	1507	0.35	1644	0.46	1785	0.59	1923	0.73	2056	0.90
2000	1590	0.41	1719	0.52	1849	0.65	1980	0.80	2108	0.96
2125	1674	0.48	1794	0.59	1917	0.72	2041	0.87	2163	1.04
2250	1760	0.56	1872	0.67	1987	0.80	2104	0.95	2221	1.12
2375	1845	0.64	1951	0.76	2060	0.89	2171	1.05	2281	1.21
2500	1932	0.74	2032	0.86	2135	0.99	2239	1.15	2345	1.32

CFM	AVAILABLE EXTERNAL STATIC PRESSURE (in. wg)									
	1.2		1.4		1.6		1.8		2.0	
	rpm	bhp	rpm	bhp	rpm	bhp	rpm	bhp	rpm	bhp
1500	2051	0.90	2177	1.08	2296	1.26	2408	1.46	2515	1.66
1625	2093	0.95	2217	1.13	2334	1.32	2445	1.52	2551	1.72
1750	2136	1.01	2259	1.19	2374	1.38	2484	1.59	2589	1.80
1875	2182	1.07	2302	1.26	2416	1.45	2524	1.66	2628	1.87
2000	2230	1.14	2347	1.33	2459	1.53	2566	1.74	2669	1.96
2125	2281	1.22	2395	1.41	2505	1.61	2610	1.83	2711	2.05
2250	2334	1.30	2445	1.50	2552	1.70	2655	1.92	2755	2.14
2375	2391	1.40	2498	1.59	2602	1.80	2702	2.02	2800	2.25
2500	2449	1.50	2552	1.70	2653	1.91	2752	2.13	—	—

Standard/Medium Static 1267-2390 rpm, 1.44 maximum bhp

High Static 1267-2836 rpm, 2.43 maximum bhp

50FE-A06 Three Phase — Standard/Medium Static — 5 Ton Horizontal Supply (rpm - vdc)

CFM	AVAILABLE EXTERNAL STATIC PRESSURE (in. wg)									
	0.2		0.4		0.6		0.8		1.0	
	rpm	vdc	rpm	vdc	rpm	vdc	rpm	vdc	rpm	vdc
1500	1267	5.3	1442	6.0	1612	6.7	1770	7.4	1916	8.0
1625	1345	5.6	1506	6.3	1666	7.0	1818	7.6	1960	8.2
1750	1425	6.0	1574	6.6	1723	7.2	1869	7.8	2006	8.4
1875	1507	6.3	1644	6.9	1785	7.5	1923	8.0	2056	8.6
2000	1590	6.7	1719	7.2	1849	7.7	1980	8.3	2108	8.8
2125	1674	7.0	1794	7.5	1917	8.0	2041	8.5	2163	9.1
2250	1760	7.4	1872	7.8	1987	8.3	2104	8.8	2221	9.3
2375	1845	7.7	1951	8.2	2060	8.6	2171	9.1	2281	9.5
2500	1932	8.1	2032	8.5	2135	8.9	2239	9.4	2345	9.8

CFM	AVAILABLE EXTERNAL STATIC PRESSURE (in. wg)									
	1.2		1.4		1.6		1.8		2.0	
	rpm	vdc	rpm	vdc	rpm	vdc	rpm	vdc	rpm	vdc
1500	2051	8.6	2177	9.1	2296	9.6	—	—	—	—
1625	2093	8.8	2217	9.3	2334	9.8	—	—	—	—
1750	2136	8.9	2259	9.5	2374	9.9	—	—	—	—
1875	2182	9.1	2302	9.6	—	—	—	—	—	—
2000	2230	9.3	2347	9.8	—	—	—	—	—	—
2125	2281	9.5	—	—	—	—	—	—	—	—
2250	2334	9.8	—	—	—	—	—	—	—	—
2375	—	—	—	—	—	—	—	—	—	—
2500	—	—	—	—	—	—	—	—	—	—

Standard/Medium Static 1267-2390 rpm

50FE-A06 Three Phase — High Static — 5 Ton Horizontal Supply (rpm - vdc)

CFM	AVAILABLE EXTERNAL STATIC PRESSURE (in. wg)									
	0.2		0.4		0.6		0.8		1.0	
	rpm	vdc	rpm	vdc	rpm	vdc	rpm	vdc	rpm	vdc
1500	1267	4.5	1442	5.1	1612	5.7	1770	6.2	1916	6.8
1625	1345	4.7	1506	5.3	1666	5.9	1818	6.4	1960	6.9
1750	1425	5.0	1574	5.6	1723	6.1	1869	6.6	2006	7.1
1875	1507	5.3	1644	5.8	1785	6.3	1923	6.8	2056	7.2
2000	1590	5.6	1719	6.1	1849	6.5	1980	7.0	2108	7.4
2125	1674	5.9	1794	6.3	1917	6.8	2041	7.2	2163	7.6
2250	1760	6.2	1872	6.6	1987	7.0	2104	7.4	2221	7.8
2375	1845	6.5	1951	6.9	2060	7.3	2171	7.7	2281	8.0
2500	1932	6.8	2032	7.2	2135	7.5	2239	7.9	2345	8.3

CFM	AVAILABLE EXTERNAL STATIC PRESSURE (in. wg)									
	1.2		1.4		1.6		1.8		2.0	
	rpm	vdc	rpm	vdc	rpm	vdc	rpm	vdc	rpm	vdc
1500	2051	7.2	2177	7.7	2296	8.1	2408	8.5	2515	8.9
1625	2093	7.4	2217	7.8	2334	8.2	2445	8.6	2551	9.0
1750	2136	7.5	2259	8.0	2374	8.4	2484	8.8	2589	9.1
1875	2182	7.7	2302	8.1	2416	8.5	2524	8.9	2628	9.3
2000	2230	7.9	2347	8.3	2459	8.7	2566	9.0	2669	9.4
2125	2281	8.0	2395	8.4	2505	8.8	2610	9.2	2711	9.6
2250	2334	8.2	2445	8.6	2552	9.0	2655	9.4	2755	9.7
2375	2391	8.4	2498	8.8	2602	9.2	2702	9.5	2800	9.9
2500	2449	8.6	2552	9.0	2653	9.4	2752	9.7	—	—

High Static 1267-2836 rpm

Fan data (cont)

50FE-M07 Three Phase — 6 Ton Horizontal Supply (rpm - bhp)

CFM	AVAILABLE EXTERNAL STATIC PRESSURE (in. wg)									
	0.2		0.4		0.6		0.8		1.0	
	rpm	bhp	rpm	bhp	rpm	bhp	rpm	bhp	rpm	bhp
1800	1379	0.27	1512	0.35	1650	0.46	1786	0.58	1918	0.72
1950	1473	0.32	1594	0.41	1721	0.52	1848	0.64	1973	0.78
2100	1569	0.39	1680	0.48	1796	0.59	1915	0.71	2032	0.85
2250	1666	0.47	1769	0.56	1876	0.67	1986	0.79	2096	0.93
2400	1764	0.55	1860	0.65	1959	0.76	2061	0.88	2165	1.02
2550	1863	0.65	1952	0.75	2045	0.86	2140	0.99	2237	1.13
2700	1963	0.76	2047	0.86	2133	0.97	2222	1.10	2313	1.24
2850	2063	0.88	2142	0.99	2223	1.10	2307	1.23	2393	1.37
3000	2163	1.01	2238	1.12	2315	1.24	2394	1.37	2474	1.52

CFM	AVAILABLE EXTERNAL STATIC PRESSURE (in. wg)									
	1.2		1.4		1.6		1.8		2.0	
	rpm	bhp	rpm	bhp	rpm	bhp	rpm	bhp	rpm	bhp
1800	2044	0.87	2163	1.03	2276	1.20	2383	1.38	2486	1.57
1950	2094	0.93	2210	1.10	2320	1.27	2426	1.45	2527	1.64
2100	2148	1.00	2260	1.17	2367	1.34	2471	1.53	2570	1.72
2250	2206	1.08	2313	1.25	2417	1.43	2518	1.61	2616	1.81
2400	2268	1.18	2371	1.34	2471	1.52	2569	1.71	2664	1.90
2550	2335	1.28	2432	1.45	2528	1.62	2622	1.81	2715	2.01
2700	2405	1.40	2497	1.56	2589	1.74	2680	1.93	2769	2.13
2850	2479	1.53	2566	1.69	2654	1.87	2740	2.06	2826	2.26
3000	2556	1.67	2639	1.84	2722	2.02	2804	2.21	—	—

Standard/Medium Static 1379-2530 rpm, 1.76 maximum bhp

High Static 1379-2836 rpm, 2.43 maximum bhp

50FE-M07 Three Phase — Standard/Medium Static — 6 Ton Horizontal Supply (rpm - vdc)

CFM	AVAILABLE EXTERNAL STATIC PRESSURE (in. wg)									
	0.2		0.4		0.6		0.8		1.0	
	rpm	vdc	rpm	vdc	rpm	vdc	rpm	vdc	rpm	vdc
1800	1379	5.5	1512	6.0	1650	6.5	1786	7.1	1918	7.6
1950	1473	5.8	1594	6.3	1721	6.8	1848	7.3	1973	7.8
2100	1569	6.2	1680	6.6	1796	7.1	1915	7.6	2032	8.0
2250	1666	6.6	1769	7.0	1876	7.4	1986	7.8	2096	8.3
2400	1764	7.0	1860	7.4	1959	7.7	2061	8.1	2165	8.6
2550	1863	7.4	1952	7.7	2045	8.1	2140	8.5	2237	8.8
2700	1963	7.8	2047	8.1	2133	8.4	2222	8.8	2313	9.1
2850	2063	8.2	2142	8.5	2223	8.8	2307	9.1	2393	9.5
3000	2163	8.5	2238	8.8	2315	9.2	2394	9.5	2474	9.8

CFM	AVAILABLE EXTERNAL STATIC PRESSURE (in. wg)									
	1.2		1.4		1.6		1.8		2.0	
	rpm	vdc	rpm	vdc	rpm	vdc	rpm	vdc	rpm	vdc
1800	2044	8.1	2163	8.5	2276	9.0	2383	9.4	2486	9.8
1950	2094	8.3	2210	8.7	2320	9.2	2426	9.6	2527	10.0
2100	2148	8.5	2260	8.9	2367	9.4	2471	9.8	—	—
2250	2206	8.7	2313	9.1	2417	9.6	2518	10.0	—	—
2400	2268	9.0	2371	9.4	2471	9.8	—	—	—	—
2550	2335	9.2	2432	9.6	2528	10.0	—	—	—	—
2700	2405	9.5	2497	9.9	—	—	—	—	—	—
2850	2479	9.8	—	—	—	—	—	—	—	—
3000	—	—	—	—	—	—	—	—	—	—

Standard/Medium Static 1379-2530 rpm

50FE-M07 Three Phase — High Static — 6 Ton Horizontal Supply (rpm - vdc)

CFM	AVAILABLE EXTERNAL STATIC PRESSURE (in. wg)									
	0.2		0.4		0.6		0.8		1.0	
	rpm	vdc	rpm	vdc	rpm	vdc	rpm	vdc	rpm	vdc
1800	1379	4.9	1512	5.3	1650	5.8	1786	6.3	1918	6.8
1950	1473	5.2	1594	5.6	1721	6.1	1848	6.5	1973	7.0
2100	1569	5.5	1680	5.9	1796	6.3	1915	6.8	2032	7.2
2250	1666	5.9	1769	6.2	1876	6.6	1986	7.0	2096	7.4
2400	1764	6.2	1860	6.6	1959	6.9	2061	7.3	2165	7.6
2550	1863	6.6	1952	6.9	2045	7.2	2140	7.5	2237	7.9
2700	1963	6.9	2047	7.2	2133	7.5	2222	7.8	2313	8.2
2850	2063	7.3	2142	7.6	2223	7.8	2307	8.1	2393	8.4
3000	2163	7.6	2238	7.9	2315	8.2	2394	8.4	2474	8.7

CFM	AVAILABLE EXTERNAL STATIC PRESSURE (in. wg)									
	1.2		1.4		1.6		1.8		2.0	
	rpm	vdc	rpm	vdc	rpm	vdc	rpm	vdc	rpm	vdc
1800	2044	7.2	2163	7.6	2276	8.0	2383	8.4	2486	8.8
1950	2094	7.4	2210	7.8	2320	8.2	2426	8.6	2527	8.9
2100	2148	7.6	2260	8.0	2367	8.3	2471	8.7	2570	9.1
2250	2206	7.8	2313	8.2	2417	8.5	2518	8.9	2616	9.2
2400	2268	8.0	2371	8.4	2471	8.7	2569	9.1	2664	9.4
2550	2335	8.2	2432	8.6	2528	8.9	2622	9.2	2715	9.6
2700	2405	8.5	2497	8.8	2589	9.1	2680	9.4	2769	9.8
2850	2479	8.7	2566	9.0	2654	9.4	2740	9.7	2826	10.0
3000	2556	9.0	2639	9.3	2722	9.6	2804	9.9	—	—

High Static 1379-2836 rpm

Legend and Notes

Applicable for Electrical Data Tables on pages 102-119

LEGEND

BRKR	— Circuit Breaker
CO	— Convenience Outlet
FLA	— Full Load Amps
IFM	— Indoor Fan Motor
LRA	— Locked Rotor Amps
MCA	— Minimum Circuit Amps
PE	— Power Exhaust
PWRD CO	— Powered Convenience Outlet
RLA	— Rated Load Amps
UNPWR CO	— Unpowered Convenience Outlet

NOTES:

1. In compliance with NEC requirements for multi-motor and combination load equipment (refer to NEC Articles 430 and 440), the overcurrent protective device for the unit shall be fuse or HACR breaker. Canadian units may be fuse or circuit breaker.
2. For 208/230 v units, where one value is show it is the same for either 208 or 230 volts.
3. **Unbalanced 3-Phase Supply Voltage**: Never operate a motor where a phase imbalance in supply voltage is greater than 2%. Use the following formula to determine the percentage of voltage imbalance.

$$\text{\% Voltage Imbalance} = 100 \times \frac{\text{max voltage deviation from average voltage}}{\text{average voltage}}$$

Example: Supply voltage is 230-3-60

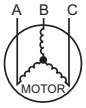

AB = 224-v
BC = 231-v
AC = 226-v

$$\text{Average Voltage} = \frac{(224 + 231 + 226)}{3} = \frac{681}{3} = 227$$

Determine maximum deviation from average voltage.

(AB) 227-224 = 3-v

(BC) 231-227 = 4-v

(AC) 227-226 = 1-v

Maximum deviation is 4-v.

Determine percent of voltage imbalance.

$$\text{\% Voltage Imbalance} = 100x \frac{4}{227} = 1.76\%$$

This amount of phase imbalance is satisfactory as it is below the maximum allowable 2%.

IMPORTANT: If the supply voltage phase imbalance is more than 2%, contact your local electric utility company immediately.

48/50FE**04-07 Cooling Electrical Data[a]

48/50FE UNIT	V-Ph-Hz	UNIT VOLTAGE Range Min	UNIT VOLTAGE Range Max	COMPRESSOR RLA	COMPRESSOR LRA	OFM (ea) Watts	OFM (ea) FLA	STD SCCR kA	HIGH SCCR kA	IFM Type	IFM Effcy at Full Load	IFM FLA	COMBUSTION FAN MOTOR (48FE only) FLA	POWER EXHAUST Kit Qty	POWER EXHAUST FLA (ea kit)
*A04	208-1-60	187	253	16.6	94	275	1.5	5	10	MED	84%	5.1	0.48	1	1.9
										HIGH	85%	7.3	0.48	1	1.9
	230-1-60	187	253	16.6	94	275	1.5	5	10	MED	84%	5.1	0.48	1	1.9
										HIGH	85%	7.3	0.48	1	1.9
	208-3-60	187	253	12.2	98	275	1.5	5	10	MED	84%	5.1	0.48	1	1.9
										HIGH	85%	7.3	0.48	1	1.9
	230-3-60	187	253	12.2	98	275	1.5	5	10	MED	84%	5.1	0.48	1	1.9
										HIGH	85%	7.3	0.48	1	1.9
	460-3-60	414	506	5.8	44	275	0.8	5	10	MED	85%	1.2	0.25	1	1.0
										HIGH	84%	1.7	0.25	1	1.0
	575-3-60	518	633	4.5	27	275	0.6	5	—	MED	84%	1.1	0.24	1	1.9
										HIGH	85%	1.5	0.24	1	1.9
*A05	208-1-60	187	253	22.4	126	275	1.5	5	10	MED	86%	7.1	0.48	1	1.9
										HIGH	84%	9.2	0.48	1	1.9
	230-1-60	187	253	22.4	126	275	1.5	5	10	MED	86%	7.1	0.48	1	1.9
										HIGH	84%	9.2	0.48	1	1.9
	208-3-60	187	253	13.4	120	275	1.5	5	10	MED	86%	7.1	0.48	1	1.9
										HIGH	85%	5.5	0.48	1	1.9
	230-3-60	187	253	13.4	120	275	1.5	5	10	MED	86%	7.1	0.48	1	1.9
										HIGH	85%	5.5	0.48	1	1.9
	460-3-60	414	506	6.0	49	275	0.8	5	10	MED	86%	1.7	0.25	1	1.0
										HIGH	88%	2.6	0.25	1	1.0
	575-3-60	518	633	5.8	41	275	0.6	5	—	MED	85%	1.5	0.24	1	1.9
										HIGH	88%	2.3	0.24	1	1.9
*A06	208-1-60	187	253	23.7	157	275	1.5	5	10	MED	84%	9.2	0.48	1	1.9
										HIGH	87%	11.7	0.48	1	1.9
	230-1-60	187	253	23.7	157	275	1.5	5	10	MED	84%	9.2	0.48	1	1.9
										HIGH	87%	11.7	0.48	1	1.9
	208-3-60	187	253	16.2	156	275	1.5	5	10	MED	84%	9.2	0.48	1	1.9
										HIGH	84%	6.5	0.48	1	1.9
	230-3-60	187	253	16.2	156	275	1.5	5	10	MED	84%	9.2	0.48	1	1.9
										HIGH	84%	6.5	0.48	1	1.9
	460-3-60	414	506	7.8	58	275	0.8	5	10	MED	86%	2.1	0.25	1	1.0
										HIGH	88%	3.1	0.25	1	1.0
	575-3-60	518	633	6.4	48	275	0.6	5	—	MED	85%	2.0	0.24	1	1.9
										HIGH	87%	2.7	0.24	1	1.9
*M07	208-3-60	187	253	18.9	162	275	1.5	5	10	MED	87%	5.5	0.48	1	1.9
										HIGH	84%	6.5	0.48	1	1.9
	230-3-60	187	253	18.9	162	275	1.5	5	10	MED	87%	5.5	0.48	1	1.9
										HIGH	84%	6.5	0.48	1	1.9
	460-3-60	414	506	9.6	71	275	0.8	5	10	MED	88%	2.6	0.25	1	1.0
										HIGH	88%	3.1	0.25	1	1.0
	575-3-60	518	633	6.6	58	275	0.6	5	—	MED	88%	2.3	0.24	1	1.9
										HIGH	87%	2.7	0.24	1	1.9

NOTE(S):

a. 48FE Ultra Low NOx units are not available for size 07 or 575-v.

48FE**04-07 MCA MOCP Electrical Data[a]

48FE UNIT SIZE	NOM. V-Ph-Hz	IFM TYPE	STD SCCR kA	HIGH SCCR kA[b]	NO CONVENIENCE OUTLET OR UNPOWERED CONVENIENCE OUTLET							
					No Power Exhaust				With Power Exhaust (powered from unit)			
					MCA	Fuse or HACR Breaker	Disconnect Size		MCA	Fuse or HACR Breaker	Disconnect Size	
							FLA	LRA			FLA	LRA
*A04	208/230-1-60	MED	5	10	28	40	27	105	30	45	29	107
		HIGH	5	10	30	45	29	108	32	45	31	110
	208/230-3-60	MED	5	10	22	30	22	109	24	30	24	111
		HIGH	5	10	25	30	24	112	26	30	26	114
	460-3-60	MED	5	10	10	15	9	48	11	15	10	49
		HIGH	5	10	10	15	10	48	11	15	11	49
	575-3-60	MED	5	—	8	15	7	31	10	15	9	33
		HIGH	5	—	8	15	8	31	10	15	10	33
*A05	208/230-1-60	MED	5	10	37	50	36	140	39	60	38	142
		HIGH	5	10	39	60	38	143	41	60	40	145
	208/230-3-60	MED	5	10	26	30	25	134	28	40	27	136
		HIGH	5	10	24	30	23	132	26	30	26	134
	460-3-60	MED	5	10	10	15	10	53	11	15	11	54
		HIGH	5	10	11	15	11	55	12	15	12	56
	575-3-60	MED	5	—	10	15	9	45	12	15	11	47
		HIGH	5	—	11	15	10	46	13	15	12	48
*A06	208/230-1-60	MED	5	10	41	60	40	174	43	60	42	176
		HIGH	5	10	43	60	42	177	45	60	45	179
	208/230-3-60	MED	5	10	31	45	31	173	33	45	33	175
		HIGH	5	10	29	40	28	169	31	45	30	171
	460-3-60	MED	5	10	13	20	12	63	14	20	13	64
		HIGH	5	10	14	20	13	64	15	20	15	65
	575-3-60	MED	5	—	11	15	10	53	13	15	13	55
		HIGH	5	—	12	15	11	54	14	15	13	56
*M07	208/230-3-60	MED	5	10	31	45	30	174	33	50	32	176
		HIGH	5	10	32	50	31	175	34	50	33	177
	460-3-60	MED	5	10	16	25	15	77	17	25	16	78
		HIGH	5	10	16	25	16	77	17	25	17	78
	575-3-60	MED	5	—	12	15	11	63	14	15	13	65
		HIGH	5	—	12	15	11	64	14	20	14	66

NOTE(S):

a. 48FE Ultra Low NOx units are not available for size 07 or 575-v.

b. High SCCR (Short Circuit Current Rating) is not available on the following: units with Humidi-MiZer system, Low Ambient controls, Phase loss monitor, Non-fused disconnect, and 575V models.

48FE**04-07 MCA MOCP Electrical Data (cont)[a]

48FE UNIT SIZE	NOM. V-Ph-Hz	IFM TYPE	STD SCCR kA	WITH POWERED CONVENIENCE OUTLET							
				No Power Exhaust				With Power Exhaust (powered from unit)			
				MCA	Fuse or HACR Breaker	Disconnect Size		MCA	Fuse or HACR Breaker	Disconnect Size	
						FLA	LRA			FLA	LRA
*A04	208/230-3-60	MED	5	27	30	27	114	29	40	29	116
		HIGH	5	29	40	30	117	31	40	32	119
	460-3-60	MED	5	12	15	12	50	13	15	13	51
		HIGH	5	12	15	12	50	13	15	13	51
	575-3-60	MED	5	9	15	9	33	11	15	11	35
		HIGH	5	10	15	10	33	12	15	12	35
*A05	208/230-3-60	MED	5	31	40	31	139	33	45	33	141
		HIGH	5	29	40	29	137	31	40	31	139
	460-3-60	MED	5	13	15	12	55	14	15	13	56
		HIGH	5	14	15	13	57	15	20	14	58
	575-3-60	MED	5	12	15	11	47	13	15	13	49
		HIGH	5	12	15	12	48	14	20	14	50
*A06	208/230-3-60	MED	5	36	50	36	178	38	50	39	180
		HIGH	5	34	45	33	174	35	50	36	176
	460-3-60	MED	5	15	20	15	65	16	20	16	66
		HIGH	5	16	20	16	66	17	20	17	67
	575-3-60	MED	5	13	15	12	55	15	20	14	57
		HIGH	5	13	15	13	56	15	20	15	58
*M07	208/230-3-60	MED	5	36	50	35	179	38	50	37	181
		HIGH	5	37	50	36	180	39	50	39	182
	460-3-60	MED	5	18	25	17	79	19	25	19	80
		HIGH	5	19	25	18	79	20	25	19	80
	575-3-60	MED	5	13	15	13	65	15	20	15	67
		HIGH	5	14	15	13	66	16	20	16	68

NOTE(S):

a. 48FE Ultra Low NOx units are not available for size 07 or 575-v.

50FE-A04 MCA MOCP Electrical Data

UNIT SIZE	NOM. V-Ph-Hz	IFM TYPE	STD SCCR kA	HIGH SCCR kA[a]	ELECTRIC HEATER			NO CONVENIENCE OUTLET OR UNPOWERED CONVENIENCE OUTLET							
								No Power Exhaust				With Power Exhaust (powered from unit)			
					CRHEATER ***A00	NOM (kW)	FLA	MCA	Fuse or HACR BRKR	Disconnect Size		MCA	Fuse or HACR BRKR	Disconnect Size	
										FLA	LRA			FLA	LRA
50FE-A04	208/230-1-60	MED	5	10	—	—	—	28	40	27	105	30	45	29	107
			5	10	323A	3.3/4.4	15.9/18.3	28/30	40/40	27/27	105/105	30/32	45/45	29/29	107/107
			5	10	324A	4.9/6.5	23.5/27.1	36/41	40/45	33/37	105/105	39/43	45/45	35/39	107/107
			5	10	325A	6.5/8.7	31.4/36.3	46/52	50/60	42/48	105/105	48/55	50/60	44/50	107/107
			5	10	326A	7.9/10.5	37.9/43.8	54/62	60/70	49/56	105/105	57/64	60/70	52/58	107/107
			5	10	327A	9.8/13.0	46.9/54.2	65/75	70/80	60/68	105/105	68/77	70/80	62/70	107/107
		HIGH	5	10	—	—	—	30	45	29	108	32	45	31	110
			5	10	323A	3.3/4.4	15.9/18.3	30/32	45/45	29/29	108/108	32/35	45/45	31/32	110/110
			5	10	324A	4.9/6.5	23.5/27.1	39/43	45/45	35/40	108/108	41/46	45/50	38/42	110/110
			5	10	325A	6.5/8.7	31.4/36.3	49/55	50/60	45/50	108/108	51/57	60/60	47/52	110/110
			5	10	326A	7.9/10.5	37.9/43.8	57/64	60/70	52/59	108/108	59/67	60/70	54/61	110/110
			5	10	327A	9.8/13.0	46.9/54.2	68/77	70/80	62/71	108/108	71/80	80/80	65/73	110/110
	208/230-3-60	MED	5	10	—	—	—	22	30	22	109	24	30	24	111
			5	10	323A	3.3/4.4	9.2/10.6	22/22	30/30	22/22	109/109	24/24	30/30	24/24	111/111
			5	10	324A	4.9/6.5	13.6/15.6	24/26	30/30	22/24	109/109	26/29	30/30	24/26	111/111
			5	10	325A	6.5/8.7	18.1/20.9	29/33	30/35	27/30	109/109	32/35	35/35	29/32	111/111
			5	10	326A	7.9/10.5	21.9/25.3	34/38	35/40	31/35	109/109	37/41	40/45	33/37	111/111
			5	10	328A	12.0/16.0	33.4/38.5	49/55	50/60	44/50	109/109	51/57	60/60	46/52	111/111
		HIGH	5	10	—	—	—	25	30	24	112	26	30	26	114
			5	10	323A	3.3/4.4	9.2/10.6	25/25	30/30	24/24	112/112	26/26	30/30	26/26	114/114
			5	10	324A	4.9/6.5	13.6/15.6	27/29	30/30	24/26	112/112	29/31	30/35	26/29	114/114
			5	10	325A	6.5/8.7	18.1/20.9	32/36	35/40	29/32	112/112	35/38	35/40	31/35	114/114
			5	10	326A	7.9/10.5	21.9/25.3	37/41	40/45	34/37	112/112	39/44	40/45	36/40	114/114
			5	10	328A	12.0/16.0	33.4/38.5	51/58	60/60	47/53	112/112	54/60	60/60	49/55	114/114
	460-3-60	MED	5	10	—	—	—	10	15	9	48	11	15	10	49
			5	10	333A	6.0	7.2	11	15	10	48	12	15	11	49
			5	10	334A	8.8	10.6	15	15	14	48	16	20	15	49
			5	10	335A	11.5	13.8	19	20	17	48	20	25	18	49
			5	10	336A	14.0	16.8	23	25	21	48	24	25	22	49
		HIGH	5	10	—	—	—	10	15	10	48	11	15	11	49
			5	10	333A	6.0	7.2	12	15	10	48	13	15	11	49
			5	10	334A	8.8	10.6	16	20	14	48	17	20	15	49
			5	10	335A	11.5	13.8	20	20	18	48	21	25	19	49
			5	10	336A	14.0	16.8	24	25	21	48	25	25	22	49
	575-3-60	MED	5	—	—	—	—	8	15	7	31	10	15	9	33
			5	—	339A	10.0	9.6	14	15	12	31	16	20	14	33
			5	—	340A	15.0	14.4	20	20	18	31	22	25	20	33
		HIGH	5	—	—	—	—	8	15	8	31	10	15	10	33
			5	—	339A	10.0	9.6	14	15	13	31	17	20	15	33
			5	—	340A	15.0	14.4	20	20	18	31	23	25	20	33

NOTE(S):

a. High SCCR (Short Circuit Current Rating) is not available on the following: units with Humidi-MiZer system, Low Ambient controls, Phase loss monitor, Non-fused disconnect, and 575V models.

50FE-A04 MCA MOCP Electrical Data (cont)

UNIT SIZE	NOM. V-Ph-Hz	IFM TYPE	STD SCCR kA	ELECTRIC HEATER			WITH POWERED CONVENIENCE OUTLET							
							No Power Exhaust				With Power Exhaust (powered from unit)			
				CRHEATER ***A00	NOM (kW)	FLA	MCA	Fuse or HACR BRKR	Disconnect Size		MCA	Fuse or HACR BRKR	Disconnect Size	
									FLA	LRA			FLA	LRA
50FE-A04	208/230-3-60	MED	5	—	—	—	27	30	27	114	29	40	29	116
			5	323A	3.3/4.4	9.2/10.6	27/27	30/30	27/27	114/114	29/29	40/40	29/29	116/116
			5	324A	4.9/6.5	13.6/15.6	30/32	30/35	27/29	114/114	32/35	40/40	29/32	116/116
			5	325A	6.5/8.7	18.1/20.9	35/39	40/40	32/35	114/114	38/41	40/45	34/38	116/116
			5	326A	7.9/10.5	21.9/25.3	40/44	40/45	37/40	114/114	43/47	45/50	39/43	116/116
			5	328A	12.0/16.0	33.4/38.5	55/61	60/70	50/56	114/114	57/63	60/70	52/58	116/116
		HIGH	5	—	—	—	29	40	30	117	31	40	32	119
			5	323A	3.3/4.4	9.2/10.6	29/29	40/40	30/30	117/117	31/31	40/40	32/32	119/119
			5	324A	4.9/6.5	13.6/15.6	33/35	40/40	30/32	117/117	35/37	40/40	32/34	119/119
			5	325A	6.5/8.7	18.1/20.9	38/42	40/45	35/38	117/117	41/44	45/45	37/40	119/119
			5	326A	7.9/10.5	21.9/25.3	43/47	45/50	39/43	117/117	45/50	45/50	41/45	119/119
			5	328A	12.0/16.0	33.4/38.5	57/64	60/70	52/58	117/117	60/66	60/70	55/60	119/119
	460-3-60	MED	5	—	—	—	12	15	12	50	13	15	13	51
			5	333A	6.0	7.2	14	15	12	50	15	15	13	51
			5	334A	8.8	10.6	18	20	16	50	19	20	17	51
			5	335A	11.5	13.8	22	25	20	50	23	25	21	51
			5	336A	14.0	16.8	26	30	23	50	27	30	24	51
		HIGH	5	—	—	—	12	15	12	50	13	15	13	51
			5	333A	6.0	7.2	14	15	13	50	16	20	14	51
			5	334A	8.8	10.6	19	20	17	50	20	20	18	51
			5	335A	11.5	13.8	23	25	20	50	24	25	22	51
			5	336A	14.0	16.8	26	30	24	50	28	30	25	51
	575-3-60	MED	5	—	—	—	9	15	9	33	11	15	11	35
			5	339A	10.0	9.6	16	20	14	33	18	20	16	35
			5	340A	15.0	14.4	22	25	20	33	24	25	22	35
		HIGH	5	—	—	—	10	15	10	33	12	15	12	35
			5	339A	10.0	9.6	16	20	15	33	19	20	17	35
			5	340A	15.0	14.4	22	25	20	33	25	25	22	35

50FE-A05 MCA MOCP Electrical Data

UNIT SIZE	NOM. V-Ph-Hz	IFM TYPE	STD SCCR kA	HIGH SCCR kA[a]	ELECTRIC HEATER			NO CONVENIENCE OUTLET OR UNPOWERED CONVENIENCE OUTLET							
								No Power Exhaust				With Power Exhaust (powered from unit)			
					CRHEATER ***A00	NOM (kW)	FLA	MCA	Fuse or HACR BRKR	Disconnect Size		MCA	Fuse or HACR BRKR	Disconnect Size	
										FLA	LRA			FLA	LRA
50FE-A05	208/230-1-60	MED	5	10	—	—	—	37	50	36	140	39	60	38	142
			5	10	323A	3.3/4.4	15.9/18.3	37/37	50/50	36/36	140/140	39/39	60/60	38/38	142/142
			5	10	325A	6.5/8.7	31.4/36.3	49/55	50/60	44/50	140/140	51/57	60/60	46/52	142/142
			5	10	327A	9.8/13.0	46.9/54.2	68/77	70/80	62/70	140/140	70/79	70/80	64/73	142/142
			5	10	329A	13.1/17.4	62.8/72.5	88/100	90/100	80/92	140/140	90/102	90/110	83/94	142/142
			5	10	330A	14.4/19.2	69.3/80.0	96/109	100/110	88/100	140/140	98/112	100/125	90/102	142/142
			5	10	331A	15.8/21.0	75.8/87.5	104/119	110/125	95/109	140/140	106/121	110/125	98/111	142/142
		HIGH	5	10	—	—	—	39	60	38	143	41	60	40	145
			5	10	323A	3.3/4.4	15.9/18.3	39/39	60/60	38/38	143/143	41/41	60/60	40/40	145/145
			5	10	325A	6.5/8.7	31.4/36.3	51/57	60/60	47/52	143/143	54/60	60/60	49/55	145/145
			5	10	327A	9.8/13.0	46.9/54.2	71/80	80/80	65/73	143/143	73/82	80/90	67/75	145/145
			5	10	329A	13.1/17.4	62.8/72.5	90/103	100/110	83/94	143/143	93/105	100/110	85/96	145/145
			5	10	330A	14.4/19.2	69.3/80.0	99/112	100/125	90/103	143/143	101/114	110/125	92/105	145/145
			5	10	331A	15.8/21.0	75.8/87.5	107/121	110/125	98/111	143/143	109/124	110/125	100/113	145/145
	208/230-3-60	MED	5	10	—	—	—	26	30	25	134	28	40	27	136
			5	10	323A	3.3/4.4	9.2/10.6	26/26	30/30	25/25	134/134	28/28	40/40	27/27	136/136
			5	10	324A	4.9/6.5	13.6/15.6	26/29	30/30	25/26	134/134	29/31	40/40	27/28	136/136
			5	10	325A	6.5/8.7	18.1/20.9	32/35	35/35	29/32	134/134	34/38	40/40	31/34	136/136
			5	10	328A	12.0/16.0	33.4/38.5	51/57	60/60	47/52	134/134	53/60	60/60	49/55	136/136
			5	10	330A	14.4/19.2	40.0/46.2	59/67	60/70	54/61	134/134	62/69	70/70	56/63	136/136
			5	10	331A	15.8/21.0	43.8/50.5	64/72	70/80	59/66	134/134	66/75	70/80	61/68	136/136
		HIGH	5	10	—	—	—	24	30	23	132	26	30	26	134
			5	10	323A	3.3/4.4	9.2/10.6	24/24	30/30	23/23	132/132	26/26	30/30	26/26	134/134
			5	10	324A	4.9/6.5	13.6/15.6	24/27	30/30	23/24	132/132	27/29	30/30	26/26	134/134
			5	10	325A	6.5/8.7	18.1/20.9	30/33	30/35	27/30	132/132	32/36	35/40	29/33	134/134
			5	10	328A	12.0/16.0	33.4/38.5	49/55	50/60	45/51	132/132	51/58	60/60	47/53	134/134
			5	10	330A	14.4/19.2	40.0/46.2	57/65	60/70	52/59	132/132	60/67	60/70	55/62	134/134
			5	10	331A	15.8/21.0	43.8/50.5	62/70	70/80	57/64	132/132	64/73	70/80	59/67	134/134
	460-3-60	MED	5	10	—	—	—	10	15	10	53	11	15	11	54
			5	10	333A	6.0	7.2	12	15	10	53	13	15	11	54
			5	10	335A	11.5	13.8	20	20	18	53	21	25	19	54
			5	10	336A	14.0	16.8	24	25	21	53	25	25	22	54
			5	10	337A	21.5	25.9	35	35	32	53	36	40	33	54
		HIGH	5	10	—	—	—	11	15	11	55	12	15	12	56
			5	10	333A	6.0	7.2	13	15	11	55	14	15	12	56
			5	10	335A	11.5	13.8	21	25	19	55	22	25	20	56
			5	10	336A	14.0	16.8	25	25	22	55	26	30	23	56
			5	10	337A	21.5	25.9	36	40	33	55	37	40	34	56
	575-3-60	MED	5	—	—	—	—	10	15	9	45	12	15	11	47
			5	—	339A	10.0	9.6	14	15	13	45	17	20	15	47
			5	—	340A	15.0	14.4	20	20	18	45	23	25	20	47
		HIGH	5	—	—	—	—	11	15	10	46	13	15	12	48
			5	—	339A	10.0	9.6	15	15	14	46	18	20	16	48
			5	—	340A	15.0	14.4	21	25	19	46	24	25	21	48

NOTE(S):

a. High SCCR (Short Circuit Current Rating) is not available on the following: units with Humidi-MiZer system, Low Ambient controls, Phase loss monitor, Non-fused disconnect, and 575V models.

50FE-A05 MCA MOCP Electrical Data (cont)

UNIT SIZE	NOM. V-Ph-Hz	IFM TYPE	STD SCCR kA	ELECTRIC HEATER			WITH POWERED CONVENIENCE OUTLET							
							No Power Exhaust				With Power Exhaust (powered from unit)			
				CRHEATER ***A00	NOM (kW)	FLA	MCA	Fuse or HACR BRKR	Disconnect Size		MCA	Fuse or HACR BRKR	Disconnect Size	
									FLA	LRA			FLA	LRA
50FE-A05	208/230-3-60	MED	5	—	—	—	31	40	31	139	33	45	33	141
			5	323A	3.3/4.4	9.2/10.6	31/31	40/40	31/31	139/139	33/33	45/45	33/33	141/141
			5	324A	4.9/6.5	13.6/15.6	32/35	40/40	31/32	139/139	35/37	45/45	33/34	141/141
			5	325A	6.5/8.7	18.1/20.9	38/41	40/45	35/38	139/139	40/44	45/45	37/40	141/141
			5	328A	12.0/16.0	33.4/38.5	57/63	60/70	52/58	139/139	59/66	60/70	54/60	141/141
			5	330A	14.4/19.2	40.0/46.2	65/73	70/80	60/67	139/139	68/75	70/80	62/69	141/141
			5	331A	15.8/21.0	43.8/50.5	70/78	70/80	64/72	139/139	72/81	80/90	66/74	141/141
		HIGH	5	—	—	—	29	40	29	137	31	40	31	139
			5	323A	3.3/4.4	9.2/10.6	29/29	40/40	29/29	137/137	31/31	40/40	31/31	139/139
			5	324A	4.9/6.5	13.6/15.6	30/33	40/40	29/30	137/137	33/35	40/40	31/32	139/139
			5	325A	6.5/8.7	18.1/20.9	36/39	40/40	33/36	137/137	38/42	40/45	35/38	139/139
			5	328A	12.0/16.0	33.4/38.5	55/61	60/70	50/56	137/137	57/64	60/70	52/58	139/139
			5	330A	14.4/19.2	40.0/46.2	63/71	70/80	58/65	137/137	66/73	70/80	60/67	139/139
			5	331A	15.8/21.0	43.8/50.5	68/76	70/80	62/70	137/137	70/79	80/80	64/72	139/139
	460-3-60	MED	5	—	—	—	13	15	12	55	14	15	13	56
			5	333A	6.0	7.2	14	15	13	55	16	20	14	56
			5	335A	11.5	13.8	23	25	20	55	24	25	22	56
			5	336A	14.0	16.8	26	30	24	55	28	30	25	56
			5	337A	21.5	25.9	38	40	34	55	39	40	35	56
		HIGH	5	—	—	—	14	15	13	57	15	20	14	58
			5	333A	6.0	7.2	15	15	14	57	17	20	15	58
			5	335A	11.5	13.8	24	25	21	57	25	25	23	58
			5	336A	14.0	16.8	27	30	25	57	29	30	26	58
			5	337A	21.5	25.9	39	40	35	57	40	40	36	58
	575-3-60	MED	5	—	—	—	12	15	11	47	13	15	13	49
			5	339A	10.0	9.6	16	20	15	47	19	20	17	49
			5	340A	15.0	14.4	22	25	20	47	25	25	22	49
		HIGH	5	—	—	—	12	15	12	48	14	20	14	50
			5	339A	10.0	9.6	17	20	16	48	20	20	18	50
			5	340A	15.0	14.4	23	25	21	48	26	30	23	50

50FE-A06 MCA MOCP Electrical Data

UNIT SIZE	NOM. V-Ph-Hz	IFM TYPE	STD SCCR kA	HIGH SCCR kA[a]	ELECTRIC HEATER			NO CONVENIENCE OUTLET OR UNPOWERED CONVENIENCE OUTLET							
								No Power Exhaust				With Power Exhaust (powered from unit)			
					CRHEATER ***A00	NOM (kW)	FLA	MCA	Fuse or HACR BRKR	Disconnect Size		MCA	Fuse or HACR BRKR	Disconnect Size	
										FLA	LRA			FLA	LRA
50FE-A06	208/230-1-60	MED	5	10	—	—	—	41	60	40	174	43	60	42	176
			5	10	324A	4.9/6.5	23.5/27.1	41/46	60/60	40/42	174/174	44/48	60/60	42/44	176/176
			5	10	325A	6.5/8.7	31.4/36.3	51/57	60/60	47/52	174/174	54/60	60/60	49/55	176/176
			5	10	327A	9.8/13.0	46.9/54.2	71/80	80/80	65/73	174/174	73/82	80/90	67/75	176/176
			5	10	329A	13.1/17.4	62.8/72.5	90/103	100/110	83/94	174/174	93/105	100/110	85/96	176/176
			5	10	331A	15.8/21.0	75.8/87.5	107/121	110/125	98/111	174/174	109/124	110/125	100/113	176/176
		HIGH	5	10	—	—	—	43	60	42	177	45	60	45	179
			5	10	324A	4.9/6.5	23.5/27.1	44/49	60/60	42/45	177/177	47/51	60/60	45/47	179/179
			5	10	325A	6.5/8.7	31.4/36.3	54/60	60/60	50/55	177/177	57/63	60/70	52/57	179/179
			5	10	327A	9.8/13.0	46.9/54.2	74/83	80/90	67/76	177/177	76/85	80/90	70/78	179/179
			5	10	329A	13.1/17.4	62.8/72.5	94/106	100/110	86/97	177/177	96/108	100/110	88/99	179/179
			5	10	331A	15.8/21.0	75.8/87.5	110/124	110/125	101/114	177/177	112/127	125/150	103/116	179/179
	208/230-3-60	MED	5	10	—	—	—	31	45	31	173	33	45	33	175
			5	10	324A	4.9/6.5	13.6/15.6	31/31	45/45	31/31	173/173	33/34	45/45	33/33	175/175
			5	10	326A	7.9/10.5	21.9/25.3	39/44	45/45	36/40	173/173	42/46	45/50	38/42	175/175
			5	10	328A	12.0/16.0	33.4/38.5	54/60	60/60	49/55	173/173	56/62	60/70	51/57	175/175
			5	10	331A	15.8/21.0	43.8/50.5	67/75	70/80	61/69	173/173	69/77	70/80	63/71	175/175
			5	10	332A	18.4/24.5	51.1/58.9	76/86	80/90	69/78	173/173	78/88	80/90	72/81	175/175
		HIGH	5	10	—	—	—	29	40	28	169	31	45	30	171
			5	10	324A	4.9/6.5	13.6/15.6	29/29	40/40	28/28	169/169	31/31	45/45	30/30	171/171
			5	10	326A	7.9/10.5	21.9/25.3	36/40	40/40	33/37	169/169	38/43	45/45	35/39	171/171
			5	10	328A	12.0/16.0	33.4/38.5	50/57	50/60	46/52	169/169	53/59	60/60	48/54	171/171
			5	10	331A	15.8/21.0	43.8/50.5	63/72	70/80	58/66	169/169	66/74	70/80	60/68	171/171
			5	10	332A	18.4/24.5	51.1/58.9	72/82	80/90	66/75	169/169	75/85	80/90	68/77	171/171
	460-3-60	MED	5	10	—	—	—	13	20	12	63	14	20	13	64
			5	10	333A	6.0	7.2	13	20	12	63	14	20	13	64
			5	10	335A	11.5	13.8	20	20	18	63	22	25	19	64
			5	10	336A	14.0	16.8	24	25	22	63	25	25	23	64
			5	10	337A	21.5	25.9	35	40	32	63	37	40	33	64
			5	10	338A	24.0	28.9	39	40	36	63	40	45	37	64
		HIGH	5	10	—	—	—	14	20	13	64	15	20	15	65
			5	10	333A	6.0	7.2	14	20	13	64	15	20	15	65
			5	10	335A	11.5	13.8	22	25	19	64	23	25	21	65
			5	10	336A	14.0	16.8	25	25	23	64	27	30	24	65
			5	10	337A	21.5	25.9	37	40	33	64	38	40	35	65
			5	10	338A	24.0	28.9	40	45	37	64	42	45	38	65
	575-3-60	MED	5	—	—	—	—	11	15	10	53	13	15	13	55
			5	—	340A	15.0	14.4	21	25	19	53	23	25	21	55
			5	—	341A	21.0	20.2	28	30	26	53	31	35	28	55
		HIGH	5	—	—	—	—	12	15	11	54	14	15	13	56
			5	—	340A	15.0	14.4	22	25	20	54	24	25	22	56
			5	—	341A	21.0	20.2	29	30	26	54	31	35	29	56

NOTE(S):

a. High SCCR (Short Circuit Current Rating) is not available on the following: units with Humidi-MiZer system, Low Ambient controls, Phase loss monitor, Non-fused disconnect, and 575V models.

50FE-A06 MCA MOCP Electrical Data (cont)

UNIT SIZE	NOM. V-Ph-Hz	IFM TYPE	STD SCCR kA	ELECTRIC HEATER			WITH POWERED CONVENIENCE OUTLET							
				CRHEATER ***A00	NOM (kW)	FLA	No Power Exhaust				With Power Exhaust (powered from unit)			
							MCA	Fuse or HACR BRKR	Disconnect Size		MCA	Fuse or HACR BRKR	Disconnect Size	
									FLA	LRA			FLA	LRA
50FE-A06	208/230-3-60	MED	5	—	—	—	36	50	36	178	38	50	39	180
			5	324A	4.9/6.5	13.6/15.6	36/37	50/50	36/36	178/178	38/40	50/50	39/39	180/180
			5	326A	7.9/10.5	21.9/25.3	45/50	50/50	41/45	178/178	48/52	50/60	43/47	180/180
			5	328A	12.0/16.0	33.4/38.5	60/66	60/70	55/60	178/178	62/68	70/70	57/63	180/180
			5	331A	15.8/21.0	43.8/50.5	73/81	80/90	66/74	178/178	75/83	80/90	69/76	180/180
			5	332A	18.4/24.5	51.1/58.9	82/92	90/100	75/84	178/178	84/94	90/100	77/86	180/180
		HIGH	5	—	—	—	34	45	33	174	35	50	36	176
			5	324A	4.9/6.5	13.6/15.6	34/34	45/45	33/33	174/174	35/36	50/50	36/36	176/176
			5	326A	7.9/10.5	21.9/25.3	42/46	45/50	38/42	174/174	44/49	50/50	40/44	176/176
			5	328A	12.0/16.0	33.4/38.5	56/63	60/70	51/57	174/174	59/65	60/70	54/59	176/176
			5	331A	15.8/21.0	43.8/50.5	69/78	70/80	63/71	174/174	72/80	80/80	66/73	176/176
			5	332A	18.4/24.5	51.1/58.9	78/88	80/90	72/81	174/174	81/91	90/100	74/83	176/176
	460-3-60	MED	5	—	—	—	15	20	15	65	16	20	16	66
			5	333A	6.0	7.2	15	20	15	65	16	20	16	66
			5	335A	11.5	13.8	23	25	21	65	24	25	22	66
			5	336A	14.0	16.8	27	30	24	65	28	30	25	66
			5	337A	21.5	25.9	38	40	35	65	39	40	36	66
			5	338A	24.0	28.9	42	45	38	65	43	45	39	66
		HIGH	5	—	—	—	16	20	16	66	17	20	17	67
			5	333A	6.0	7.2	16	20	16	66	17	20	17	67
			5	335A	11.5	13.8	24	25	22	66	26	30	23	67
			5	336A	14.0	16.8	28	30	25	66	29	30	27	67
			5	337A	21.5	25.9	39	40	36	66	41	45	37	67
			5	338A	24.0	28.9	43	45	39	66	44	45	40	67
	575-3-60	MED	5	—	—	—	13	15	12	55	15	20	14	57
			5	340A	15.0	14.4	23	25	21	55	25	30	23	57
			5	341A	21.0	20.2	30	30	27	55	33	35	30	57
		HIGH	5	—	—	—	13	15	13	56	15	20	15	58
			5	340A	15.0	14.4	24	25	22	56	26	30	24	58
			5	341A	21.0	20.2	31	35	28	56	34	35	30	58

50FE-M07 MCA MOCP Electrical Data

UNIT SIZE	NOM. V-Ph-Hz	IFM TYPE	STD SCCR kA	HIGH SCCR kA[a]	ELECTRIC HEATER			NO CONVENIENCE OUTLET OR UNPOWERED CONVENIENCE OUTLET							
								No Power Exhaust				With Power Exhaust (powered from unit)			
					CRHEATER ***A00	NOM (kW)	FLA	MCA	Fuse or HACR BRKR	Disconnect Size		MCA	Fuse or HACR BRKR	Disconnect Size	
										FLA	LRA			FLA	LRA
50FE-M07	208/230-3-60	MED	5	10	—	—	—	31	45	30	174	33	50	32	176
			5	10	324A	4.9/6.5	13.6/15.6	31/31	45/45	30/30	174/174	33/33	50/50	32/32	176/176
			5	10	326A	7.9/10.5	21.9/25.3	35/39	45/45	32/35	174/174	37/41	50/50	34/38	176/176
			5	10	328A	12.0/16.0	33.4/38.5	49/55	50/60	45/51	174/174	51/58	60/60	47/53	176/176
			5	10	331A	15.8/21.0	43.8/50.5	62/70	70/80	57/64	174/174	64/73	70/80	59/67	176/176
			5	10	332A	18.4/24.5	51.1/58.9	71/81	80/90	65/74	174/174	74/83	80/90	67/76	176/176
		HIGH	5	10	—	—	—	32	50	31	175	34	50	33	177
			5	10	324A	4.9/6.5	13.6/15.6	32/32	50/50	31/31	175/175	34/34	50/50	33/33	177/177
			5	10	326A	7.9/10.5	21.9/25.3	36/40	50/50	33/37	175/175	38/43	50/50	35/39	177/177
			5	10	328A	12.0/16.0	33.4/38.5	50/57	50/60	46/52	175/175	53/59	60/60	48/54	177/177
			5	10	331A	15.8/21.0	43.8/50.5	63/72	70/80	58/66	175/175	66/74	70/80	60/68	177/177
			5	10	332A	18.4/24.5	51.1/58.9	72/82	80/90	66/75	175/175	75/85	80/90	68/77	177/177
	460-3-60	MED	5	10	—	—	—	16	25	15	77	17	25	16	78
			5	10	333A	6.0	7.2	16	25	15	77	17	25	16	78
			5	10	335A	11.5	13.8	21	25	19	77	22	25	20	78
			5	10	336A	14.0	16.8	25	25	22	77	26	30	23	78
			5	10	337A	21.5	25.9	36	40	33	77	37	40	34	78
			5	10	338A	24.0	28.9	40	40	36	77	41	45	37	78
		HIGH	5	10	—	—	—	16	25	16	77	17	25	17	78
			5	10	333A	6.0	7.2	16	25	16	77	17	25	17	78
			5	10	335A	11.5	13.8	22	25	19	77	23	25	21	78
			5	10	336A	14.0	16.8	25	25	23	77	27	30	24	78
			5	10	337A	21.5	25.9	37	40	33	77	38	40	35	78
			5	10	338A	24.0	28.9	40	45	37	77	42	45	38	78
	575-3-60	MED	5	—	—	—	—	12	15	11	63	14	15	13	65
			5	—	340A	15.0	14.4	21	25	19	63	24	25	21	65
			5	—	341A	21.0	20.2	29	30	26	63	31	35	28	65
		HIGH	5	—	—	—	—	12	15	11	64	14	20	14	66
			5	—	340A	15.0	14.4	22	25	20	64	24	25	22	66
			5	—	341A	21.0	20.2	29	30	26	64	31	35	29	66

NOTE(S):

a. High SCCR (Short Circuit Current Rating) is not available on the following: units with Humidi-MiZer system, Low Ambient controls, Phase loss monitor, Non-fused disconnect, and 575V models.

50FE-M07 MCA MOCP Electrical Data (cont)

UNIT SIZE	NOM. V-Ph-Hz	IFM TYPE	STD SCCR kA	ELECTRIC HEATER			WITH POWERED CONVENIENCE OUTLET							
							No Power Exhaust				With Power Exhaust (powered from unit)			
				CRHEATER ***A00	NOM (kW)	FLA	MCA	Fuse or HACR BRKR	Disconnect Size		MCA	Fuse or HACR BRKR	Disconnect Size	
									FLA	LRA			FLA	LRA
50FE-M07	208/230-3-60	MED	5	—	—	—	36	50	35	179	38	50	37	181
			5	324A	4.9/6.5	13.6/15.6	36/36	50/50	35/35	179/179	38/38	50/50	37/37	181/181
			5	326A	7.9/10.5	21.9/25.3	41/45	50/50	37/41	179/179	43/47	50/50	39/43	181/181
			5	328A	12.0/16.0	33.4/38.5	55/61	60/70	50/56	179/179	57/64	60/70	52/58	181/181
			5	331A	15.8/21.0	43.8/50.5	68/76	70/80	62/70	179/179	70/79	80/80	64/72	181/181
			5	332A	18.4/24.5	51.1/58.9	77/87	80/90	71/80	179/179	80/89	80/90	73/82	181/181
		HIGH	5	—	—	—	37	50	36	180	39	50	39	182
			5	324A	4.9/6.5	13.6/15.6	37/37	50/50	36/36	180/180	39/39	50/50	39/39	182/182
			5	326A	7.9/10.5	21.9/25.3	42/46	50/50	38/42	180/180	44/49	50/50	40/44	182/182
			5	328A	12.0/16.0	33.4/38.5	56/63	60/70	51/57	180/180	59/65	60/70	54/59	182/182
			5	331A	15.8/21.0	43.8/50.5	69/78	70/80	63/71	180/180	72/80	80/80	66/73	182/182
			5	332A	18.4/24.5	51.1/58.9	78/88	80/90	72/81	180/180	81/91	90/100	74/83	182/182
	460-3-60	MED	5	—	—	—	18	25	17	79	19	25	19	80
			5	333A	6.0	7.2	18	25	17	79	19	25	19	80
			5	335A	11.5	13.8	24	25	21	79	25	25	23	80
			5	336A	14.0	16.8	27	30	25	79	29	30	26	80
			5	337A	21.5	25.9	39	40	35	79	40	40	36	80
			5	338A	24.0	28.9	43	45	39	79	44	45	40	80
		HIGH	5	—	—	—	19	25	18	79	20	25	19	80
			5	333A	6.0	7.2	19	25	18	79	20	25	19	80
			5	335A	11.5	13.8	24	25	22	79	26	30	23	80
			5	336A	14.0	16.8	28	30	25	79	29	30	27	80
			5	337A	21.5	25.9	39	40	36	79	41	45	37	80
			5	338A	24.0	28.9	43	45	39	79	44	45	40	80
	575-3-60	MED	5	—	—	—	13	15	13	65	15	20	15	67
			5	340A	15.0	14.4	23	25	21	65	26	30	23	67
			5	341A	21.0	20.2	31	35	28	65	33	35	30	67
		HIGH	5	—	—	—	14	15	13	66	16	20	16	68
			5	340A	15.0	14.4	24	25	22	66	26	30	24	68
			5	341A	21.0	20.2	31	35	28	66	34	35	30	68

50FE-A04 1-Phase Electric Heat Data — Without Non-Fused Disconnect

50FE UNIT SIZE	NOM. V-Ph-Hz	IFM TYPE	ELECTRIC HEATER PART NUMBER	NOM (kW)	APPLICATION (kW)	APPLICATION OUTPUT (MBH)	SINGLE POINT OR JUNCTION PART NUMBER CRSINGLEXXXA00			
							No CO or Unpowered CO		With PWRD CO	
							No PE	With PE (pwrd fr/unit)	No PE	With PE (pwrd fr/unit)
-A04	208/230-1-60	MED	CRHEATER323A00	4.4	3.3/4.0	11.3/13.8	—	—	—	—
			CRHEATER324A00	6.5	4.9/6.0	16.7/20.4	—	—	—	—
			CRHEATER325A00	8.7	6.5/8.0	22.3/27.3	037	037	037	040
			CRHEATER326A00	10.5	7.9/9.6	26.9/32.9	040	040	040	040
			CRHEATER327A00	13.0	9.8/11.9	33.3/40.7	040	040	040	040
		HIGH	CRHEATER323A00	4.4	3.3/4.0	11.3/13.8	—	—	—	—
			CRHEATER324A00	6.5	4.9/6.0	16.7/20.4	—	—	—	037
			CRHEATER325A00	8.7	6.5/8.0	22.3/27.3	037	037	040	040
			CRHEATER326A00	10.5	7.9/9.6	26.9/32.9	040	040	040	040
			CRHEATER327A00	13.0	9.8/11.9	33.3/40.7	040	040	040	040

50FE-A04 1-Phase Electric Heat Data — With Non-Fused Disconnect

50FE UNIT SIZE	NOM. V-Ph-Hz	IFM TYPE	ELECTRIC HEATER PART NUMBER	NOM (kW)	APPLICATION (kW)	APPLICATION OUTPUT (MBH)	SINGLE POINT OR JUNCTION PART NUMBER CRSINGLEXXXA00			
							No CO or Unpowered CO		With PWRD CO	
							No PE	With PE (pwrd fr/unit)	No PE	With PE (pwrd fr/unit)
-A04	208/230-1-60	MED	CRHEATER323A00	4.4	3.3/4.0	11.3/13.8	037	037	037	037
			CRHEATER324A00	6.5	4.9/6.0	16.7/20.4	037	037	037	037
			CRHEATER325A00	8.7	6.5/8.0	22.3/27.3	037	037	037	040
			CRHEATER326A00	10.5	7.9/9.6	26.9/32.9	040	040	040	040
			CRHEATER327A00	13.0	9.8/11.9	33.3/40.7	040	040	040	040
		HIGH	CRHEATER323A00	4.4	3.3/4.0	11.3/13.8	037	037	037	037
			CRHEATER324A00	6.5	4.9/6.0	16.7/20.4	037	037	037	037
			CRHEATER325A00	8.7	6.5/8.0	22.3/27.3	037	037	040	040
			CRHEATER326A00	10.5	7.9/9.6	26.9/32.9	040	040	040	040
			CRHEATER327A00	13.0	9.8/11.9	33.3/40.7	040	040	040	040

50FE-A04 3-Phase Electric Heat Data — Without Non-Fused Disconnect

50FE UNIT SIZE	NOM. V-Ph-Hz	IFM TYPE	ELECTRIC HEATER PART NUMBER	NOM (kW)	APPLICATION (kW)	APPLICATION OUTPUT (MBH)	SINGLE POINT OR JUNCTION PART NUMBER CRSINGLEXXXA00			
							No CO or Unpowered CO		With PWRD CO	
							No PE	With PE (pwrd fr/unit)	No PE	With PE (pwrd fr/unit)
-A04	208/230-3-60	MED	CRHEATER323A00	4.4	3.3/4.0	11.3/13.8	—	—	—	—
			CRHEATER324A00	6.5	4.9/6.0	16.7/20.4	—	—	—	—
			CRHEATER325A00	8.7	6.5/8.0	22.3/27.3	—	—	—	—
			CRHEATER326A00	10.5	7.9/9.6	26.9/32.9	—	—	—	—
			CRHEATER328A00	16.0	12.0/14.7	41.0/50.1	037	037	038	038
		HIGH	CRHEATER323A00	4.4	3.3/4.0	11.3/13.8	—	—	—	—
			CRHEATER324A00	6.5	4.9/6.0	16.7/20.4	—	—	—	—
			CRHEATER325A00	8.7	6.5/8.0	22.3/27.3	—	—	—	—
			CRHEATER326A00	10.5	7.9/9.6	26.9/32.9	—	—	—	—
			CRHEATER328A00	16.0	12.0/14.7	41.0/50.1	037	037	038	038
	460-3-60	MED	CRHEATER333A00	6.0	5.5	18.8	—	—	—	—
			CRHEATER334A00	8.8	8.1	27.6	—	—	—	—
			CRHEATER335A00	11.5	10.6	36.0	—	—	—	—
			CRHEATER336A00	14.0	12.9	43.9	—	—	—	—
		HIGH	CRHEATER333A00	6.0	5.5	18.8	—	—	—	—
			CRHEATER334A00	8.8	8.1	27.6	—	—	—	—
			CRHEATER335A00	11.5	10.6	36.0	—	—	—	—
			CRHEATER336A00	14.0	12.9	43.9	—	—	—	—
	575-3-60	MED	CRHEATER339A00	10.0	9.2	31.3	—	—	—	—
			CRHEATER340A00	15.0	13.8	47.0	—	—	—	—
		HIGH	CRHEATER339A00	10.0	9.2	31.3	—	—	—	—
			CRHEATER340A00	15.0	13.8	47.0	—	—	—	—

50FE-A04 3-Phase Electric Heat Data — With Non-Fused Disconnect

50FE UNIT SIZE	NOM. V-Ph-Hz	IFM TYPE	ELECTRIC HEATER PART NUMBER	NOM (kW)	APPLICATION (kW)	APPLICATION OUTPUT (MBH)	SINGLE POINT OR JUNCTION PART NUMBER CRSINGLEXXXA00			
							No CO or Unpowered CO		With PWRD CO	
							No PE	With PE (pwrd fr/unit)	No PE	With PE (pwrd fr/unit)
-A04	208/230-3-60	MED	CRHEATER323A00	4.4	3.3/4.0	11.3/13.8	037	037	037	037
			CRHEATER324A00	6.5	4.9/6.0	16.7/20.4	037	037	037	037
			CRHEATER325A00	8.7	6.5/8.0	22.3/27.3	037	037	037	037
			CRHEATER326A00	10.5	7.9/9.6	26.9/32.9	037	037	037	037
			CRHEATER328A00	16.0	12.0/14.7	41.0/50.1	037	037	038	038
		HIGH	CRHEATER323A00	4.4	3.3/4.0	11.3/13.8	037	037	037	037
			CRHEATER324A00	6.5	4.9/6.0	16.7/20.4	037	037	037	037
			CRHEATER325A00	8.7	6.5/8.0	22.3/27.3	037	037	037	037
			CRHEATER326A00	10.5	7.9/9.6	26.9/32.9	037	037	037	037
			CRHEATER328A00	16.0	12.0/14.7	41.0/50.1	037	037	038	038
	460-3-60	MED	CRHEATER333A00	6.0	5.5	18.8	—	—	—	—
			CRHEATER334A00	8.8	8.1	27.6	—	—	—	—
			CRHEATER335A00	11.5	10.6	36.0	—	—	—	—
			CRHEATER336A00	14.0	12.9	43.9	—	—	—	—
		HIGH	CRHEATER333A00	6.0	5.5	18.8	—	—	—	—
			CRHEATER334A00	8.8	8.1	27.6	—	—	—	—
			CRHEATER335A00	11.5	10.6	36.0	—	—	—	—
			CRHEATER336A00	14.0	12.9	43.9	—	—	—	—
	575-3-60	MED	CRHEATER339A00	10.0	9.2	31.3	—	—	—	—
			CRHEATER340A00	15.0	13.8	47.0	—	—	—	—
		HIGH	CRHEATER339A00	10.0	9.2	31.3	—	—	—	—
			CRHEATER340A00	15.0	13.8	47.0	—	—	—	—

50FE-A05 1-Phase Electric Heat Data — Without Non-Fused Disconnect

50FE UNIT SIZE	NOM. V-Ph-Hz	IFM TYPE	ELECTRIC HEATER PART NUMBER	NOM (kW)	APPLICATION (kW)	APPLICATION OUTPUT (MBH)	SINGLE POINT OR JUNCTION PART NUMBER CRSINGLEXXXA00			
							No CO or Unpowered CO		With PWRD CO	
							No PE	With PE (pwrd fr/unit)	No PE	With PE (pwrd fr/unit)
-A05	208/230-1-60	MED	CRHEATER323A00	4.4	3.3/4.0	11.3/13.8	—	—	—	—
			CRHEATER325A00	8.7	6.5/8.0	22.3/27.3	037	037	040	040
			CRHEATER327A00	13.0	9.8/11.9	33.3/40.7	040	040	040	040
			CRHEATER329A00	17.4	13.1/16.0	44.6/54.5	040	040	040	040
			CRHEATER330A00	19.2	14.4/17.6	49.2/60.2	040	040	040	040
			CRHEATER331A00	21.0	15.8/19.3	53.8/65.8	040	040	040	040
		HIGH	CRHEATER323A00	4.4	3.3/4.0	11.3/13.8	—	—	—	—
			CRHEATER325A00	8.7	6.5/8.0	22.3/27.3	037	037	040	040
			CRHEATER327A00	13.0	9.8/11.9	33.3/40.7	040	040	040	040
			CRHEATER329A00	17.4	13.1/16.0	44.6/54.5	040	040	040	040
			CRHEATER330A00	19.2	14.4/17.6	49.2/60.2	040	040	040	040
			CRHEATER331A00	21.0	15.8/19.3	53.8/65.8	040	040	040	040

50FE-A05 1-Phase Electric Heat Data — With Non-Fused Disconnect

50FE UNIT SIZE	NOM. V-Ph-Hz	IFM TYPE	ELECTRIC HEATER PART NUMBER	NOM (kW)	APPLICATION (kW)	APPLICATION OUTPUT (MBH)	SINGLE POINT OR JUNCTION PART NUMBER CRSINGLEXXXA00			
							No CO or Unpowered CO		With PWRD CO	
							No PE	With PE (pwrd fr/unit)	No PE	With PE (pwrd fr/unit)
-A05	208/230-1-60	MED	CRHEATER323A00	4.4	3.3/4.0	11.3/13.8	037	037	037	037
			CRHEATER325A00	8.7	6.5/8.0	22.3/27.3	037	037	040	040
			CRHEATER327A00	13.0	9.8/11.9	33.3/40.7	040	040	040	040
			CRHEATER329A00	17.4	13.1/16.0	44.6/54.5	040	040	040	040
			CRHEATER330A00	19.2	14.4/17.6	49.2/60.2	040	040	040	040
			CRHEATER331A00	21.0	15.8/19.3	53.8/65.8	040	040	040	040
		HIGH	CRHEATER323A00	4.4	3.3/4.0	11.3/13.8	037	037	037	037
			CRHEATER325A00	8.7	6.5/8.0	22.3/27.3	037	037	040	040
			CRHEATER327A00	13.0	9.8/11.9	33.3/40.7	040	040	040	040
			CRHEATER329A00	17.4	13.1/16.0	44.6/54.5	040	040	040	040
			CRHEATER330A00	19.2	14.4/17.6	49.2/60.2	040	040	040	040
			CRHEATER331A00	21.0	15.8/19.3	53.8/65.8	040	040	040	040

50FE-A05 3-Phase Electric Heat Data — Without Non-Fused Disconnect

50FE UNIT SIZE	NOM. V-Ph-Hz	IFM TYPE	ELECTRIC HEATER PART NUMBER	NOM (kW)	APPLICATION (kW)	APPLICATION OUTPUT (MBH)	SINGLE POINT OR JUNCTION PART NUMBER CRSINGLEXXXA00			
							No CO or Unpowered CO		With PWRD CO	
							No PE	With PE (pwrd fr/unit)	No PE	With PE (pwrd fr/unit)
-05A	208/230-3-60	MED	CRHEATER323A00	4.4	3.3/4.0	11.3/13.8	—	—	—	—
			CRHEATER324A00	6.5	4.9/6.0	16.7/20.4	—	—	—	—
			CRHEATER325A00	8.7	6.5/8.0	22.3/27.3	—	—	—	—
			CRHEATER328A00	16.0	12.0/14.7	41.0/50.1	037	037	038	038
			CRHEATER330A00	19.2	14.4/17.6	49.2/60.2	038	038	038	038
			CRHEATER331A00	21.0	15.8/19.3	53.8/65.8	038	038	038	038
		HIGH	CRHEATER323A00	4.4	3.3/4.0	11.3/13.8	—	—	—	—
			CRHEATER324A00	6.5	4.9/6.0	16.7/20.4	—	—	—	—
			CRHEATER325A00	8.7	6.5/8.0	22.3/27.3	—	—	—	—
			CRHEATER328A00	16.0	12.0/14.7	41.0/50.1	037	037	038	038
			CRHEATER330A00	19.2	14.4/17.6	49.2/60.2	038	038	038	038
			CRHEATER331A00	21.0	15.8/19.3	53.8/65.8	038	038	038	038
	460-3-60	MED	CRHEATER333A00	6.0	5.5	18.8	—	—	—	—
			CRHEATER335A00	11.5	10.6	36.0	—	—	—	—
			CRHEATER336A00	14.0	12.9	43.9	—	—	—	—
			CRHEATER337A00	21.5	19.7	67.4	037	037	037	037
		HIGH	CRHEATER333A00	6.0	5.5	18.8	—	—	—	—
			CRHEATER335A00	11.5	10.6	36.0	—	—	—	—
			CRHEATER336A00	14.0	12.9	43.9	—	—	—	—
			CRHEATER337A00	21.5	19.7	67.4	037	037	037	037
	575-3-60	MED	CRHEATER339A00	10.0	9.2	31.3	—	—	—	—
			CRHEATER340A00	15.0	13.8	47.0	—	—	—	—
		HIGH	CRHEATER339A00	10.0	9.2	31.3	—	—	—	—
			CRHEATER340A00	15.0	13.8	47.0	—	—	—	—

50FE-A05 3-Phase Electric Heat Data — With Non-Fused Disconnect

50FE UNIT SIZE	NOM. V-Ph-Hz	IFM TYPE	ELECTRIC HEATER PART NUMBER	NOM (kW)	APPLICATION (kW)	APPLICATION OUTPUT (MBH)	SINGLE POINT OR JUNCTION PART NUMBER CRSINGLEXXXA00			
							No CO or Unpowered CO		With PWRD CO	
							No PE	With PE (pwrd fr/unit)	No PE	With PE (pwrd fr/unit)
-A05	208/230-3-60	MED	CRHEATER323A00	4.4	3.3/4.0	11.3/13.8	037	037	037	037
			CRHEATER324A00	6.5	4.9/6.0	16.7/20.4	037	037	037	037
			CRHEATER325A00	8.7	6.5/8.0	22.3/27.3	037	037	037	037
			CRHEATER328A00	16.0	12.0/14.7	41.0/50.1	037	037	038	038
			CRHEATER330A00	19.2	14.4/17.6	49.2/60.2	038	038	038	038
			CRHEATER331A00	21.0	15.8/19.3	53.8/65.8	038	038	038	038
		HIGH	CRHEATER323A00	4.4	3.3/4.0	11.3/13.8	037	037	037	037
			CRHEATER324A00	6.5	4.9/6.0	16.7/20.4	037	037	037	037
			CRHEATER325A00	8.7	6.5/8.0	22.3/27.3	037	037	037	037
			CRHEATER328A00	16.0	12.0/14.7	41.0/50.1	037	037	038	038
			CRHEATER330A00	19.2	14.4/17.6	49.2/60.2	038	038	038	038
			CRHEATER331A00	21.0	15.8/19.3	53.8/65.8	038	038	038	038
	460-3-60	MED	CRHEATER333A00	6.0	5.5	18.8	—	—	—	—
			CRHEATER335A00	11.5	10.6	36.0	—	—	—	—
			CRHEATER336A00	14.0	12.9	43.9	—	—	—	—
			CRHEATER337A00	21.5	19.7	67.4	037	037	037	037
		HIGH	CRHEATER333A00	6.0	5.5	18.8	—	—	—	—
			CRHEATER335A00	11.5	10.6	36.0	—	—	—	—
			CRHEATER336A00	14.0	12.9	43.9	—	—	—	—
			CRHEATER337A00	21.5	19.7	67.4	037	037	037	037
	575-3-60	MED	CRHEATER339A00	10.0	9.2	31.3	—	—	—	—
			CRHEATER340A00	15.0	13.8	47.0	—	—	—	—
		HIGH	CRHEATER339A00	10.0	9.2	31.3	—	—	—	—
			CRHEATER340A00	15.0	13.8	47.0	—	—	—	—

50FE-A06 1-Phase Electric Heat Data — Without Non-Fused Disconnect

50FE UNIT SIZE	NOM. V-Ph-Hz	IFM TYPE	ELECTRIC HEATER PART NUMBER	NOM (kW)	APPLICATION (kW)	APPLICATION OUTPUT (MBH)	SINGLE POINT OR JUNCTION PART NUMBER CRSINGLEXXXA00			
							No CO or Unpowered CO		With PWRD CO	
							No PE	With PE (pwrd fr/unit)	No PE	With PE (pwrd fr/unit)
-A06	208/230-1-60	MED	CRHEATER324A00	6.5	4.9/6.0	16.7/20.4	—	—	037	037
			CRHEATER325A00	8.7	6.5/8.0	22.3/27.3	037	037	040	040
			CRHEATER327A00	13.0	9.8/11.9	33.3/40.7	040	040	040	040
			CRHEATER329A00	17.4	13.1/16.0	44.6/54.5	040	040	040	040
			CRHEATER331A00	21.0	15.8/19.3	53.8/65.8	040	040	040	040
		HIGH	CRHEATER324A00	6.5	4.9/6.0	16.7/20.4	—	037	037	037
			CRHEATER325A00	8.7	6.5/8.0	22.3/27.3	037	040	040	040
			CRHEATER327A00	13.0	9.8/11.9	33.3/40.7	040	040	040	040
			CRHEATER329A00	17.4	13.1/16.0	44.6/54.5	040	040	040	040
			CRHEATER331A00	21.0	15.8/19.3	53.8/65.8	040	040	040	040

50FE-A06 1-Phase Electric Heat Data — With Non-Fused Disconnect

50FE UNIT SIZE	NOM. V-Ph-Hz	IFM TYPE	ELECTRIC HEATER PART NUMBER	NOM (kW)	APPLICATION (kW)	APPLICATION OUTPUT (MBH)	SINGLE POINT OR JUNCTION PART NUMBER CRSINGLEXXXA00			
							No CO or Unpowered CO		With PWRD CO	
							No PE	With PE (pwrd fr/unit)	No PE	With PE (pwrd fr/unit)
-A06	208/230-1-60	MED	CRHEATER324A00	6.5	4.9/6.0	16.7/20.4	037	037	037	037
			CRHEATER325A00	8.7	6.5/8.0	22.3/27.3	037	037	040	040
			CRHEATER327A00	13.0	9.8/11.9	33.3/40.7	040	040	040	040
			CRHEATER329A00	17.4	13.1/16.0	44.6/54.5	040	040	040	040
			CRHEATER331A00	21.0	15.8/19.3	53.8/65.8	040	040	040	040
		HIGH	CRHEATER324A00	6.5	4.9/6.0	16.7/20.4	037	037	037	037
			CRHEATER325A00	8.7	6.5/8.0	22.3/27.3	037	040	040	040
			CRHEATER327A00	13.0	9.8/11.9	33.3/40.7	040	040	040	040
			CRHEATER329A00	17.4	13.1/16.0	44.6/54.5	040	040	040	040
			CRHEATER331A00	21.0	15.8/19.3	53.8/65.8	040	040	040	040

50FE-A06 3-Phase Electric Heat Data — Without Non-Fused Disconnect

50FE UNIT SIZE	NOM. V-Ph-Hz	IFM TYPE	ELECTRIC HEATER PART NUMBER	NOM (kW)	APPLICATION (kW)	APPLICATION OUTPUT (MBH)	SINGLE POINT OR JUNCTION PART NUMBER CRSINGLEXXXA00			
							No CO or Unpowered CO		With PWRD CO	
							No PE	With PE (pwrd fr/unit)	No PE	With PE (pwrd fr/unit)
-A06	208/230-3-60	MED	CRHEATER324A00	6.5	4.9/6.0	16.7/20.4	—	—	—	—
			CRHEATER326A00	10.5	7.9/9.6	26.9/32.9	—	—	—	037
			CRHEATER328A00	16.0	12.0/14.7	41.0/50.1	037	038	038	038
			CRHEATER331A00	21.0	15.8/19.3	53.8/65.8	038	038	038	038
			CRHEATER332A00	24.5	18.4/22.5	62.8/76.8	038	038	038	038
		HIGH	CRHEATER324A00	6.5	4.9/6.0	16.7/20.4	—	—	—	—
			CRHEATER326A00	10.5	7.9/9.6	26.9/32.9	—	—	—	—
			CRHEATER328A00	16.0	12.0/14.7	41.0/50.1	037	037	038	038
			CRHEATER331A00	21.0	15.8/19.3	53.8/65.8	038	038	038	038
			CRHEATER332A00	24.5	18.4/22.5	62.8/76.8	038	038	038	038
	460-3-60	MED	CRHEATER333A00	6.0	5.5	18.8	—	—	—	—
			CRHEATER335A00	11.5	10.6	36.0	—	—	—	—
			CRHEATER336A00	14.0	12.9	43.9	—	—	—	—
			CRHEATER337A00	21.5	19.7	67.4	037	037	037	037
			CRHEATER338A00	24.0	22.0	75.2	037	037	037	037
		HIGH	CRHEATER333A00	6.0	5.5	18.8	—	—	—	—
			CRHEATER335A00	11.5	10.6	36.0	—	—	—	—
			CRHEATER336A00	14.0	12.9	43.9	—	—	—	—
			CRHEATER337A00	21.5	19.7	67.4	037	037	037	037
			CRHEATER338A00	24.0	22.0	75.2	037	037	037	037
	575-3-60	MED	CRHEATER340A00	15.0	13.8	47.0	—	—	—	—
			CRHEATER341A00	21.0	19.3	65.8	037	037	037	037
		HIGH	CRHEATER340A00	15.0	13.8	47.0	—	—	—	—
			CRHEATER341A00	21.0	19.3	65.8	037	037	037	037

50FE-A06 3-Phase Electric Heat Data — With Non-Fused Disconnect

50FE UNIT SIZE	NOM. V-Ph-Hz	IFM TYPE	ELECTRIC HEATER PART NUMBER	NOM (kW)	APPLICATION (kW)	APPLICATION OUTPUT (MBH)	SINGLE POINT OR JUNCTION PART NUMBER CRSINGLEXXXA00			
							No CO or Unpowered CO		With PWRD CO	
							No PE	With PE (pwrd fr/unit)	No PE	With PE (pwrd fr/unit)
-A06	208/230-3-60	MED	CRHEATER324A00	6.5	4.9/6.0	16.7/20.4	037	037	037	037
			CRHEATER326A00	10.5	7.9/9.6	26.9/32.9	037	037	037	037
			CRHEATER328A00	16.0	12.0/14.7	41.0/50.1	037	038	038	038
			CRHEATER331A00	21.0	15.8/19.3	53.8/65.8	038	038	038	038
			CRHEATER332A00	24.5	18.4/22.5	62.8/76.8	038	038	038	038
		HIGH	CRHEATER324A00	6.5	4.9/6.0	16.7/20.4	037	037	037	037
			CRHEATER326A00	10.5	7.9/9.6	26.9/32.9	037	037	037	037
			CRHEATER328A00	16.0	12.0/14.7	41.0/50.1	037	037	038	038
			CRHEATER331A00	21.0	15.8/19.3	53.8/65.8	038	038	038	038
			CRHEATER332A00	24.5	18.4/22.5	62.8/76.8	038	038	038	038
	460-3-60	MED	CRHEATER333A00	6.0	5.5	18.8	—	—	—	—
			CRHEATER335A00	11.5	10.6	36.0	—	—	—	—
			CRHEATER336A00	14.0	12.9	43.9	—	—	—	—
			CRHEATER337A00	21.5	19.7	67.4	037	037	037	037
			CRHEATER338A00	24.0	22.0	75.2	037	037	037	037
		HIGH	CRHEATER333A00	6.0	5.5	18.8	—	—	—	—
			CRHEATER335A00	11.5	10.6	36.0	—	—	—	—
			CRHEATER336A00	14.0	12.9	43.9	—	—	—	—
			CRHEATER337A00	21.5	19.7	67.4	037	037	037	037
			CRHEATER338A00	24.0	22.0	75.2	037	037	037	037
	575-3-60	MED	CRHEATER340A00	15.0	13.8	47.0	—	—	—	—
			CRHEATER341A00	21.0	19.3	65.8	037	037	037	037
		HIGH	CRHEATER340A00	15.0	13.8	47.0	—	—	—	—
			CRHEATER341A00	21.0	19.3	65.8	037	037	037	037

50FE-*07 Electric Heat Data — Without Non-Fused Disconnect

50FE UNIT SIZE	NOM. V-Ph-Hz	IFM TYPE	ELECTRIC HEATER PART NUMBER	NOM (kW)	APPLICATION (kW)	APPLICATION OUTPUT (MBH)	SINGLE POINT OR JUNCTION PART NUMBER CRSINGLEXXXA00			
							No CO or Unpowered CO		With PWRD CO	
							No PE	With PE (pwrd fr/unit)	No PE	With PE (pwrd fr/unit)
-*07	208/230-3-60	MED	CRHEATER324A00	6.5	4.9/6.0	16.7/20.4	—	—	—	—
			CRHEATER326A00	10.5	7.9/9.6	26.9/32.9	—	—	—	—
			CRHEATER328A00	16.0	12.0/14.7	41.0/50.1	037	037	038	038
			CRHEATER331A00	21.0	15.8/19.3	53.8/65.8	038	038	038	038
			CRHEATER332A00	24.5	18.4/22.5	62.8/76.8	038	038	038	038
		HIGH	CRHEATER324A00	6.5	4.9/6.0	16.7/20.4	—	—	—	—
			CRHEATER326A00	10.5	7.9/9.6	26.9/32.9	—	—	—	—
			CRHEATER328A00	16.0	12.0/14.7	41.0/50.1	037	037	038	038
			CRHEATER331A00	21.0	15.8/19.3	53.8/65.8	038	038	038	038
			CRHEATER332A00	24.5	18.4/22.5	62.8/76.8	038	038	038	038
	460-3-60	MED	CRHEATER333A00	6.0	5.5	18.8	—	—	—	—
			CRHEATER335A00	11.5	10.6	36.0	—	—	—	—
			CRHEATER336A00	14.0	12.9	43.9	—	—	—	—
			CRHEATER337A00	21.5	19.7	67.4	037	037	037	037
			CRHEATER338A00	24.0	22.0	75.2	037	037	037	037
		HIGH	CRHEATER333A00	6.0	5.5	18.8	—	—	—	—
			CRHEATER335A00	11.5	10.6	36.0	—	—	—	—
			CRHEATER336A00	14.0	12.9	43.9	—	—	—	—
			CRHEATER337A00	21.5	19.7	67.4	037	037	037	037
			CRHEATER338A00	24.0	22.0	75.2	037	037	037	037
	575-3-60	MED	CRHEATER340A00	15.0	13.8	47.0	—	—	—	—
			CRHEATER341A00	21.0	19.3	65.8	037	037	037	037
		HIGH	CRHEATER340A00	15.0	13.8	47.0	—	—	—	—
			CRHEATER341A00	21.0	19.3	65.8	037	037	037	037

50FE-*07 Electric Heat Data — With Non-Fused Disconnect

50FE UNIT SIZE	NOM. V-Ph-Hz	IFM TYPE	ELECTRIC HEATER PART NUMBER	NOM (kW)	APPLICATION (kW)	APPLICATION OUTPUT (MBH)	SINGLE POINT OR JUNCTION PART NUMBER CRSINGLEXXXA00			
							No CO or Unpowered CO		With PWRD CO	
							No PE	With PE (pwrd fr/unit)	No PE	With PE (pwrd fr/unit)
-*07	208/230-3-60	MED	CRHEATER324A00	6.5	4.9/6.0	16.7/20.4	037	037	037	037
			CRHEATER326A00	10.5	7.9/9.6	26.9/32.9	037	037	037	037
			CRHEATER328A00	16.0	12.0/14.7	41.0/50.1	037	037	038	038
			CRHEATER331A00	21.0	15.8/19.3	53.8/65.8	038	038	038	038
			CRHEATER332A00	24.5	18.4/22.5	62.8/76.8	038	038	038	038
		HIGH	CRHEATER324A00	6.5	4.9/6.0	16.7/20.4	037	037	037	037
			CRHEATER326A00	10.5	7.9/9.6	26.9/32.9	037	037	037	037
			CRHEATER328A00	16.0	12.0/14.7	41.0/50.1	037	037	038	038
			CRHEATER331A00	21.0	15.8/19.3	53.8/65.8	038	038	038	038
			CRHEATER332A00	24.5	18.4/22.5	62.8/76.8	038	038	038	038
	460-3-60	MED	CRHEATER333A00	6.0	5.5	18.8	—	—	—	—
			CRHEATER335A00	11.5	10.6	36.0	—	—	—	—
			CRHEATER336A00	14.0	12.9	43.9	—	—	—	—
			CRHEATER337A00	21.5	19.7	67.4	037	037	037	037
			CRHEATER338A00	24.0	22.0	75.2	037	037	037	037
		HIGH	CRHEATER333A00	6.0	5.5	18.8	—	—	—	—
			CRHEATER335A00	11.5	10.6	36.0	—	—	—	—
			CRHEATER336A00	14.0	12.9	43.9	—	—	—	—
			CRHEATER337A00	21.5	19.7	67.4	037	037	037	037
			CRHEATER338A00	24.0	22.0	75.2	037	037	037	037
	575-3-60	MED	CRHEATER340A00	15.0	13.8	47.0	—	—	—	—
			CRHEATER341A00	21.0	19.3	65.8	037	037	037	037
		HIGH	CRHEATER340A00	15.0	13.8	47.0	—	—	—	—
			CRHEATER341A00	21.0	19.3	65.8	037	037	037	037

Typical Control Wiring Diagram — Electromechanical with POL224 — 48FE 04-06 Units Shown

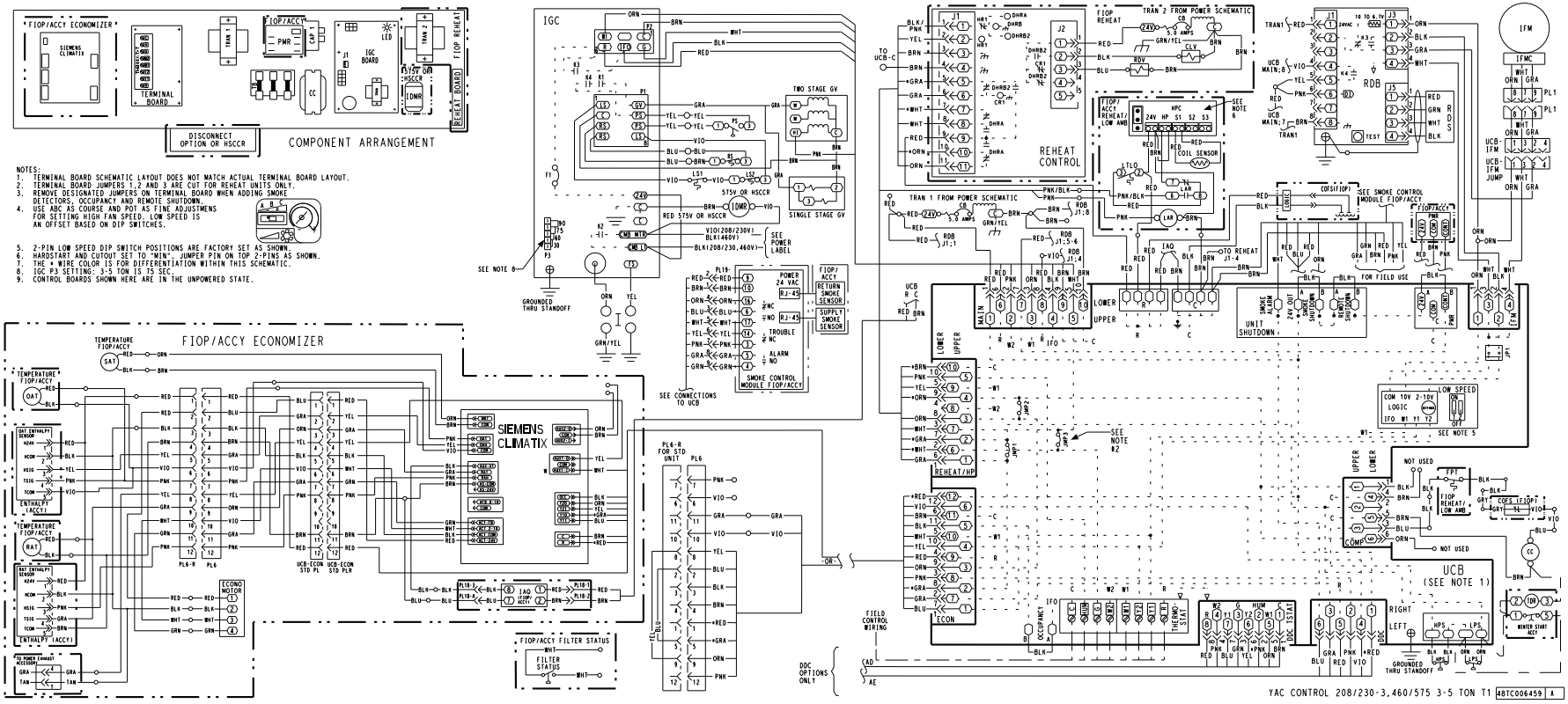

Typical Control Wiring Diagram — Electromechanical with POL224 — 48FE 04-06 Ultra Low NOx Units Shown

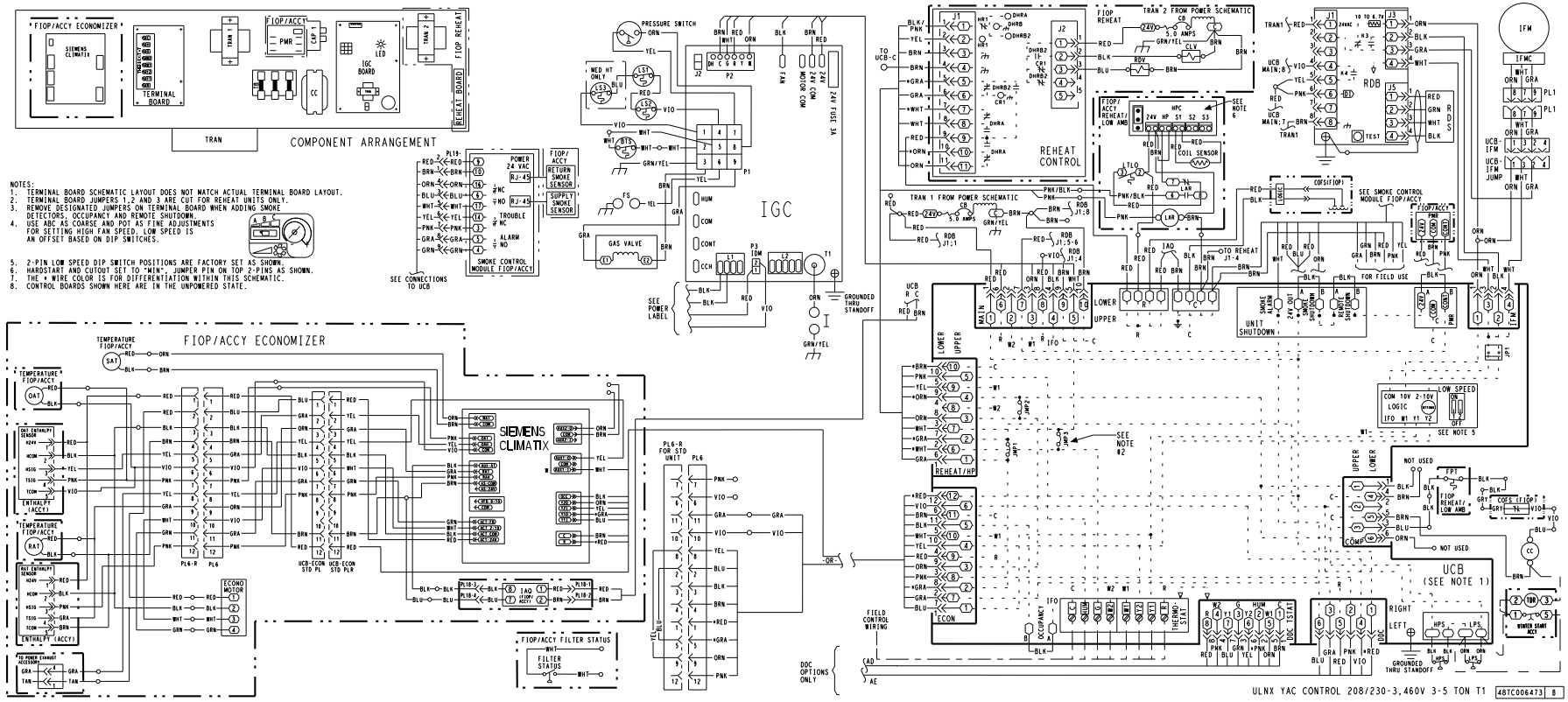

Typical Control Wiring Diagram — Electromechanical with POL224 — 48FE 07 Units Shown

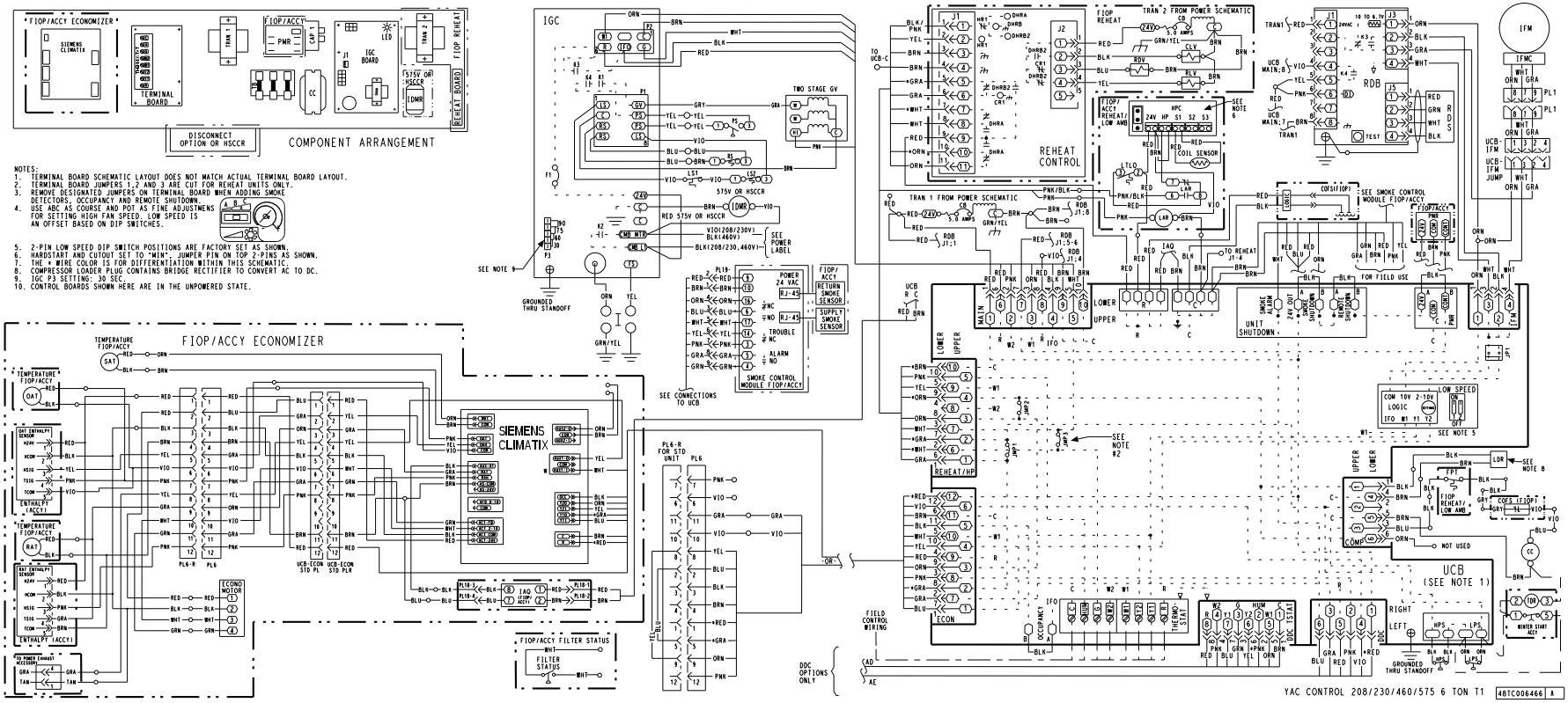

Typical Control Wiring Diagram — SystemVu™ Controller — 48FE 04-06 Units Shown

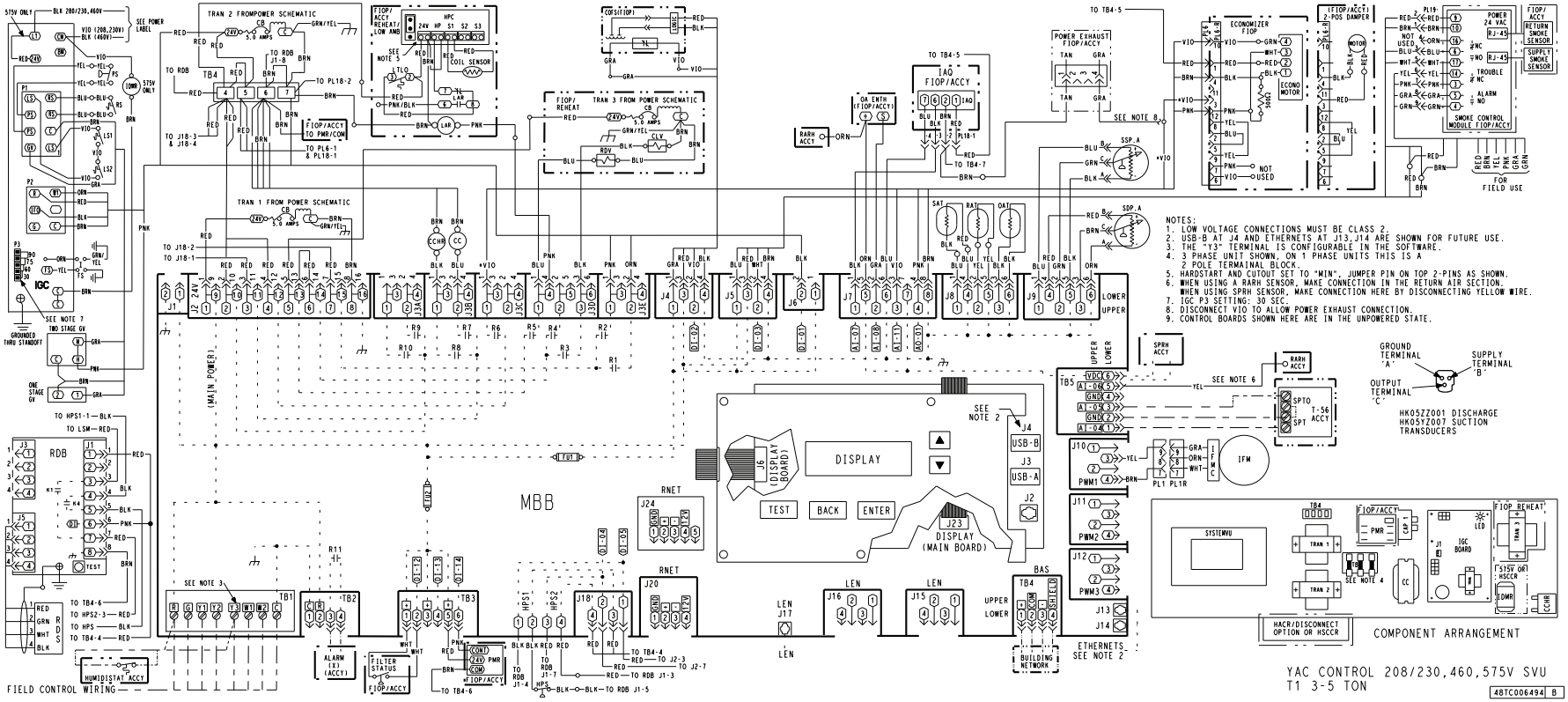

Typical Control Wiring Diagram — SystemVu™ Controller — 48FE 04-06 Ultra Low NOx Units Shown

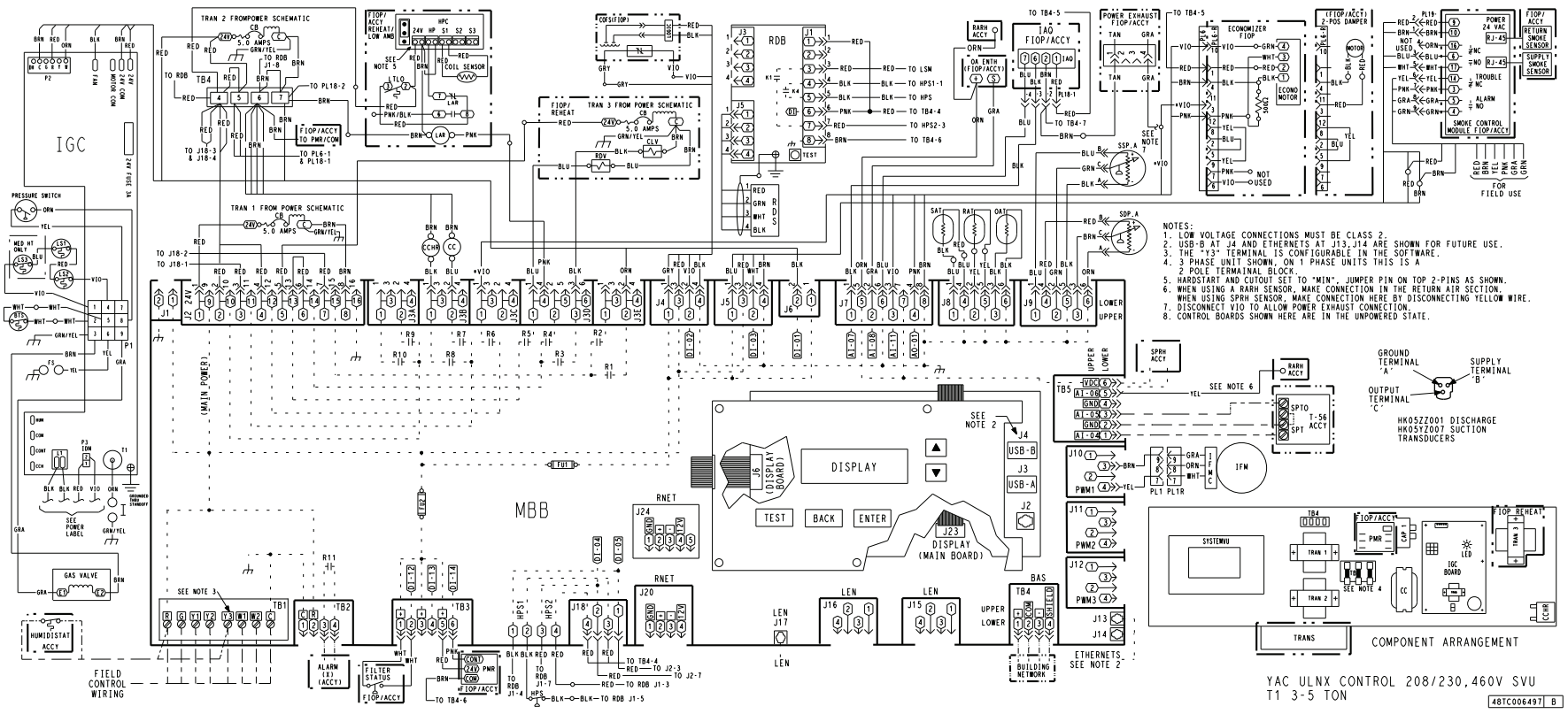

Typical Control Wiring Diagram — SystemVu™ Controller — 48FE 07 Units Shown

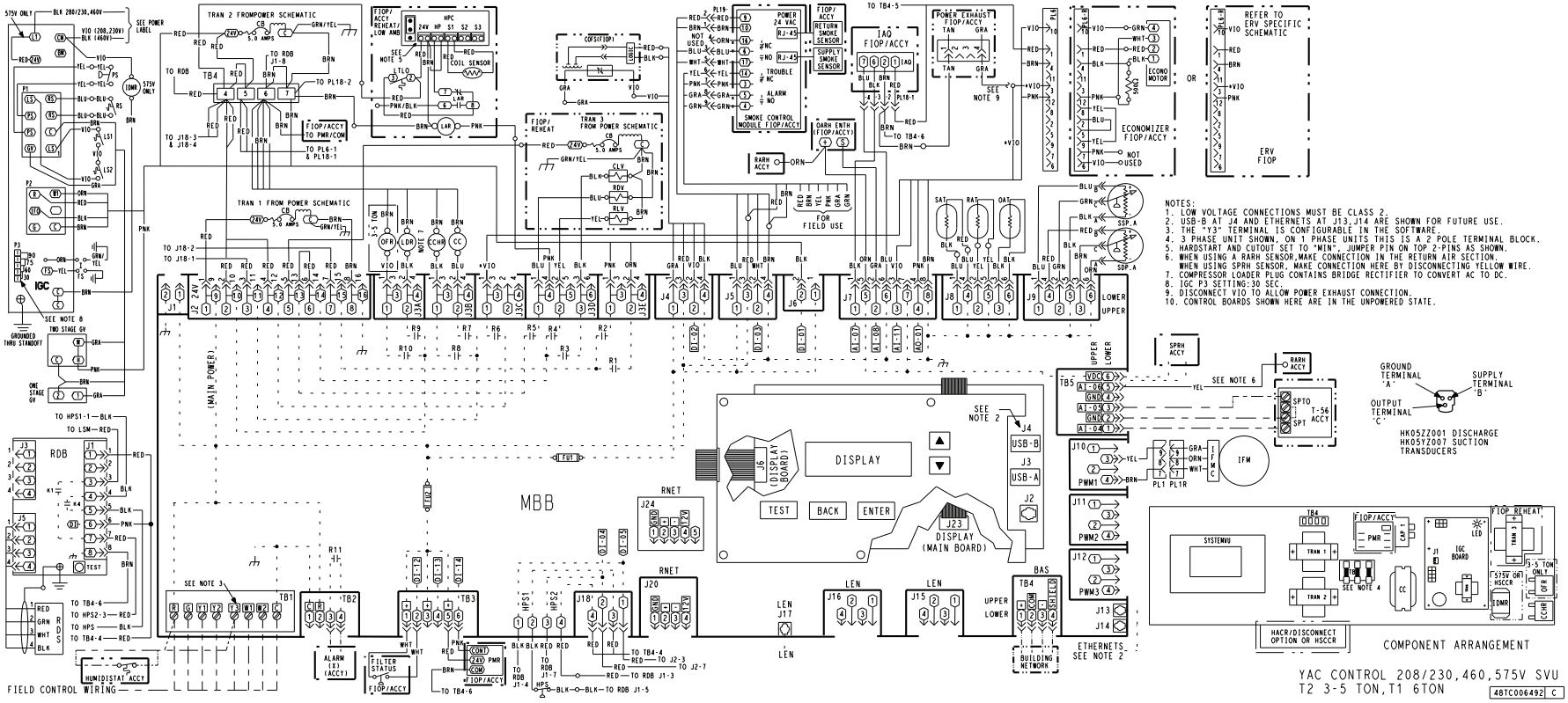

Typical Power Wiring Diagram for Electromechanical Units, 48FE 04-07, 460/575-3-60 Units Shown

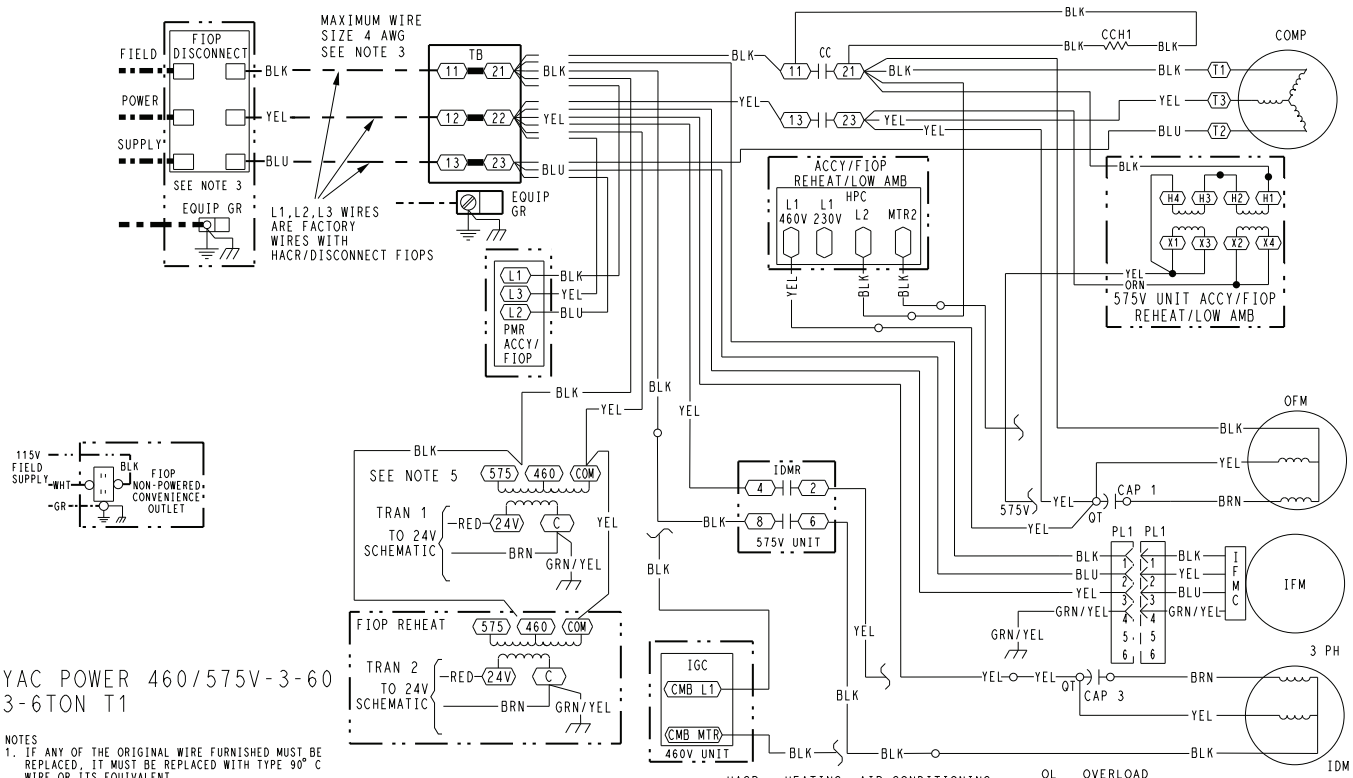

YAC POWER 460/575V-3-60
3-6TON T1

NOTES
1. IF ANY OF THE ORIGINAL WIRE FURNISHED MUST BE REPLACED, IT MUST BE REPLACED WITH TYPE 90° C WIRE OR ITS EQUIVALENT.
2. COMPRESSOR AND FAN MOTORS ARE THERMALLY PROTECTED.
3. USE COPPER CONDUCTOR ONLY.
4. DO NOT DISCONNECT POWER PLUG OR SIGNAL WIRE WHILE UNDER LOAD.
5. TRANSFORMER IS DEDICATED BASED ON UNIT VOLTAGE. TAPS ONLY SHOWN TO SIMPLIFY SCHEMATIC.

LEGEND

(X)	MARKED WIRE
(X)	TERMINAL (MARKED)
○	TERMINAL (UNMARKED)
[X]	TERMINAL BLOCK
●	SPLICE
(●)	SPLICE (MARKED)
———	FACTORY WIRING
— ——— —	FIELD CONTROL WIRING
- - - - - -	FIELD POWER WIRING
- - - - - - -	CIRCUIT BOARD TRACE
——— · · —	ACCESSORY OR OPTIONAL WIRING

ACCY	ACCESSORY
AUX	AUXILIARY
AWG	AMERICAN WIRE GAGE
BA	BUILDING AUTOMATION NETWORK
CC	CONTACTOR,COMPRESSOR
C	COMMON
CAP	CAPACITOR
CB	CIRCUIT BREAKER
CCH	CRANKCASE HEATER
CCHR	CRANKCASE HEATER RELAY
CCHTS	CRANKCASE HEATER TEMP SWITCH
CLO	COMPRESSOR LOCKOUT
CLV	COOLING LIQUID VALVE
CMB	CENTRIFUGAL MOTOR BLOWER
COFS	CONDENSATE OVERFLOW SWITCH
COM	SIGNAL COMMON
COMP	COMPRESSOR MOTOR
DDC	DIRECT DIGITAL CONTROL
DFB	DEFROST BOARD
DFT	DEFROST THERMOSTAT
EHR	ELECTRIC HEAT RELAY
ENTH	ENTHALPY
EQUIP	EQUIPMENT
ERV	ENERGY RECOVERY VENTILATOR
ESL	ENTHALPY SENSOR - LOW
FB	FUSE BLOCK
FIOP	FACTORY INSTALLED OPTION
FPT	FREEZE PROTECTION THERMOSTAT
FS	FLAME SWITCH
FST	FAN HOUSING TEMP SENSOR
FU	FUSE
G	THERMOSTAT FAN CALL
GR(GND)	GROUND
GV	GAS VALVE

HACR	HEATING, AIR-CONDITIONING, REFRIGERATION BREAKER
HGRH	HOT GAS REHEAT
HPC	HEAD PRESSURE CONTROL
HPS	HIGH PRESSURE SWITCH
HR	HEATER RELAY
HUM	HUMIDISTAT
IAQ	INDOOR AIR QUALITY SENSORS
IDM	INDUCED DRAFT MOTOR
IDMR	INDUCED DRAFT RELAY
IFM	INDOOR FAN MOTOR
IFMC	INDOOR FAN MOTOR CONTROL
IFO	INDOOR FAN ON SIGNAL
IGC	INTEGRATED GAS CONTROL
I	IGNITOR
IRH	INDOOR RELATIVE HUMIDITY
JMP	JUMPER
L1	LINE 1
LA	LOW AMBIENT LOCKOUT
LAR	LOW AMBIENT RELAY
LAS	LOW AMBIENT SWITCH
LDR	COMPRESSOR LOADER
LEN	LOCAL EQUIPMENT NETWORK
LOC	LOSS OF CHARGE
LOOP PWR	CURRENT LOOP POWER
LPS	LOW PRESSURE SWITCH
LS	LIMIT SWITCH
LSM	LIMIT SWITCH (MANUAL RESET)
LTLO	LOW TEMP LOCKOUT
MBB	MAIN BASE BOARD
MOV	METAL OXIDE VARISTOR
MTR	MOTOR
OAQ	OUTDOOR AIR QUALITY
OAT	OUTDOOR AIR TEMP. SEN
OFM	OUTDOOR FAN MOTOR
OFR	OUTDOOR FAN RELAY

OL	OVERLOAD
PER	POWER EXHAUST RELAY
PH	PHASE
PL	PLUG ASSEMBLY
POT	POTENTIOMETER
PMR	PHASE MONITOR RELAY
PS	PRESSURE SWITCH
PWM	PULSE WIDTH MODULATION
QT	QUADRUPLE TERMINAL
R	THERMOSTAT POWER
RAT	RETURN AIR TEMP. SEN
RDB	REFRIGERANT DISSIPATION BOARD
RDS	REFRIGERANT DISSIPATION SENSOR
RDV	REHEAT DISCHARGE VALVE
RH	RELATIVE HUMIDITY
RLV	REHEAT LIQUID VALVE
RNET	LOCAL ACCESS NETWORK
RS	ROLLOUT SWITCH
RVS	REVERSING VALVE SOLENOID
SAT	SUPPLY AIR TEMP SENSOR
SDP	SYSTEM DISCHARGE PRESSURE
SPRH	SPACE RELATIVE HUMIDITY
SPT	SPACE TEMPERATURE SENSOR
SPTO	SPACE TEMPERATURE OFFSET
SSP	SYSTEM SUCTION PRESSURE
STD	STANDARD
SW	SWITCH
TB	TERMINAL BLOCK
TDR	TIME DELAY RELAY
TRAN	TRANSFORMER
UCB	UNIT CONTROL BOARD
W1	1st STAGE OF HEATING CALL
W2	2nd STAGE OF HEATING CALL
Y1	1st STAGE OF COOLING CALL
Y2	2nd STAGE OF COOLING CALL

48TC002992 | G

Typical Power Wiring Diagram for Electromechanical Units, 48FE 04-06 Ultra Low NOx Units, 460-3-60 Unit Shown

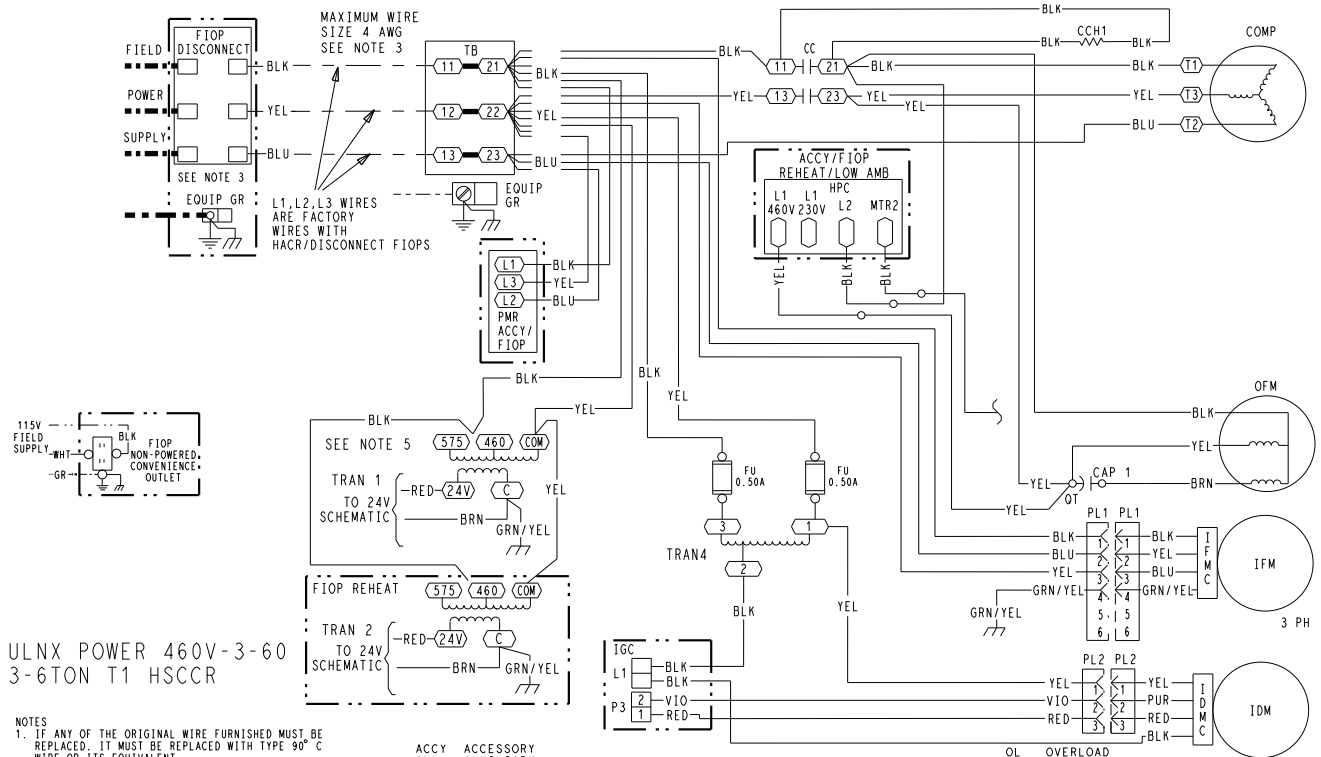

NOTES
1. IF ANY OF THE ORIGINAL WIRE FURNISHED MUST BE REPLACED, IT MUST BE REPLACED WITH TYPE 90° C WIRE OR ITS EQUIVALENT.
2. COMPRESSOR AND FAN MOTORS ARE THERMALLY PROTECTED.
3. USE COPPER CONDUCTOR ONLY.
4. DO NOT DISCONNECT POWER PLUG OR SIGNAL WIRE WHILE UNDER LOAD.
5. TRANSFORMER IS DEDICATED BASED ON UNIT VOLTAGE. TAPS ONLY SHOWN TO SIMPLIFY SCHEMATIC.

LEGEND

- MARKED WIRE
- TERMINAL (MARKED)
- TERMINAL (UNMARKED)
- TERMINAL BLOCK
- SPLICE
- SPLICE (MARKED)
- FACTORY WIRING
- FIELD CONTROL WIRING
- FIELD POWER WIRING
- CIRCUIT BOARD TRACE
- ACCESSORY OR OPTIONAL WIRING

ACCY	ACCESSORY
AUX	AUXILIARY
AWG	AMERICAN WIRE GAGE
BA	BUILDING AUTOMATION NETWORK
CC	CONTACTOR,COMPRESSOR
C	COMMON
CAP	CAPACITOR
CB	CIRCUIT BREAKER
CCH	CRANKCASE HEATER
CCHR	CRANKCASE HEATER RELAY
CCHTS	CRANKCASE HEATER TEMP SWITCH
CLO	COMPRESSOR LOCKOUT
CLV	COOLING LIQUID VALVE
CMB	CENTRIFUGAL MOTOR BLOWER
COFS	CONDENSATE OVERFLOW SWITCH
COM	SIGNAL COMMON
COMP	COMPRESSOR MOTOR
DDC	DIRECT DIGITAL CONTROL
DFB	DEFROST BOARD
DFT	DEFROST THERMOSTAT
EHR	ELECTRIC HEAT RELAY
ENTH	ENTHALPY
EQUIP	EQUIPMENT
ERV	ENERGY RECOVERY VENTILATOR
ESL	ENTHALPY SENSOR - LOW
FB	FUSE BLOCK
FIOP	FACTORY INSTALLED OPTION
FPT	FREEZE PROTECTION THERMOSTAT
FS	FLAME SWITCH
FST	FAN HOUSING TEMP SENSOR
FU	FUSE
G	THERMOSTAT FAN CALL
GR(GND)	GROUND
GV	GAS VALVE
HACR	HEATING, AIR-CONDITIONING, REFRIGERATION BREAKER
HGRH	HOT GAS REHEAT
HPC	HEAD PRESSURE CONTROL
HPS	HIGH PRESSURE SWITCH
HR	HEATER RELAY
HUM	HUMIDISTAT
IAQ	INDOOR AIR QUALITY SENSORS
IDM	INDUCED DRAFT MOTOR
IDMC	INDUCER DRAFT MOTOR CONTROLLER
IDMR	INDUCED DRAFT RELAY
IFM	INDOOR FAN MOTOR
IFMC	INDOOR FAN MOTOR CONTROL
IFO	INDOOR FAN ON SIGNAL
IGC	INTEGRATED GAS CONTROL
I	IGNITOR
IRH	INDOOR RELATIVE HUMIDITY
JMP	JUMPER
L1	LINE 1
LA	LOW AMBIENT LOCKOUT
LAR	LOW AMBIENT RELAY
LAS	LOW AMBIENT SWITCH
LDR	COMPRESSOR LOADER
LEN	LOCAL EQUIPMENT NETWORK
LOC	LOSS OF CHARGE
LOOP PWR	CURRENT LOOP POWER
LPS	LOW PRESSURE SWITCH
LS	LIMIT SWITCH
LSM	LIMIT SWITCH (MANUAL RESET)
LTLO	LOW TEMP LOCKOUT
MBB	MAIN BASE BOARD
MOV	METAL OXIDE VARISTOR
MTR	MOTOR
OAQ	OUTDOOR AIR QUALITY
OAT	OUTDOOR AIR TEMP. SEN
OFM	OUTDOOR FAN MOTOR
OFR	OUTDOOR FAN RELAY
OL	OVERLOAD
PER	POWER EXHAUST RELAY
PH	PHASE
PL	PLUG ASSEMBLY
POT	POTENTIOMETER
PMR	PHASE MONITOR RELAY
PS	PRESSURE SWITCH
PWM	PULSE WIDTH MODULATION
QT	QUADRUPLE TERMINAL
R	THERMOSTAT POWER
RAT	RETURN AIR TEMP. SEN
RDB	REFRIGERANT DISSIPATION BOARD
RDS	REFRIGERANT DISSIPATION SENSOR
RDV	REHEAT DISCHARGE VALVE
RH	RELATIVE HUMIDITY
RLV	REHEAT LIQUID VALVE
RNET	LOCAL ACCESS NETWORK
RS	ROLLOUT SWITCH
RVS	REVERSING VALVE SOLENOID
SAT	SUPPLY AIR TEMP SENSOR
SDP	SYSTEM DISCHARGE PRESSURE
SPRH	SPACE RELATIVE HUMIDITY
SPT	SPACE TEMPERATURE SENSOR
SPTO	SPACE TEMPERATURE OFFSET
SSP	SYSTEM SUCTION PRESSURE
STD	STANDARD
SW	SWITCH
TB	TERMINAL BLOCK
TDR	TIME DELAY RELAY
TRAN	TRANSFORMER
UCB	UNIT CONTROL BOARD
W1	1st STAGE OF HEATING CALL
W2	2nd STAGE OF HEATING CALL
Y1	1st STAGE OF COOLING CALL
Y2	2nd STAGE OF COOLING CALL

48TC004290 | H

Typical Power Wiring Diagram for SystemVu™ Controller Units, 48FE 04-07, 460/575-3-60 Units Shown

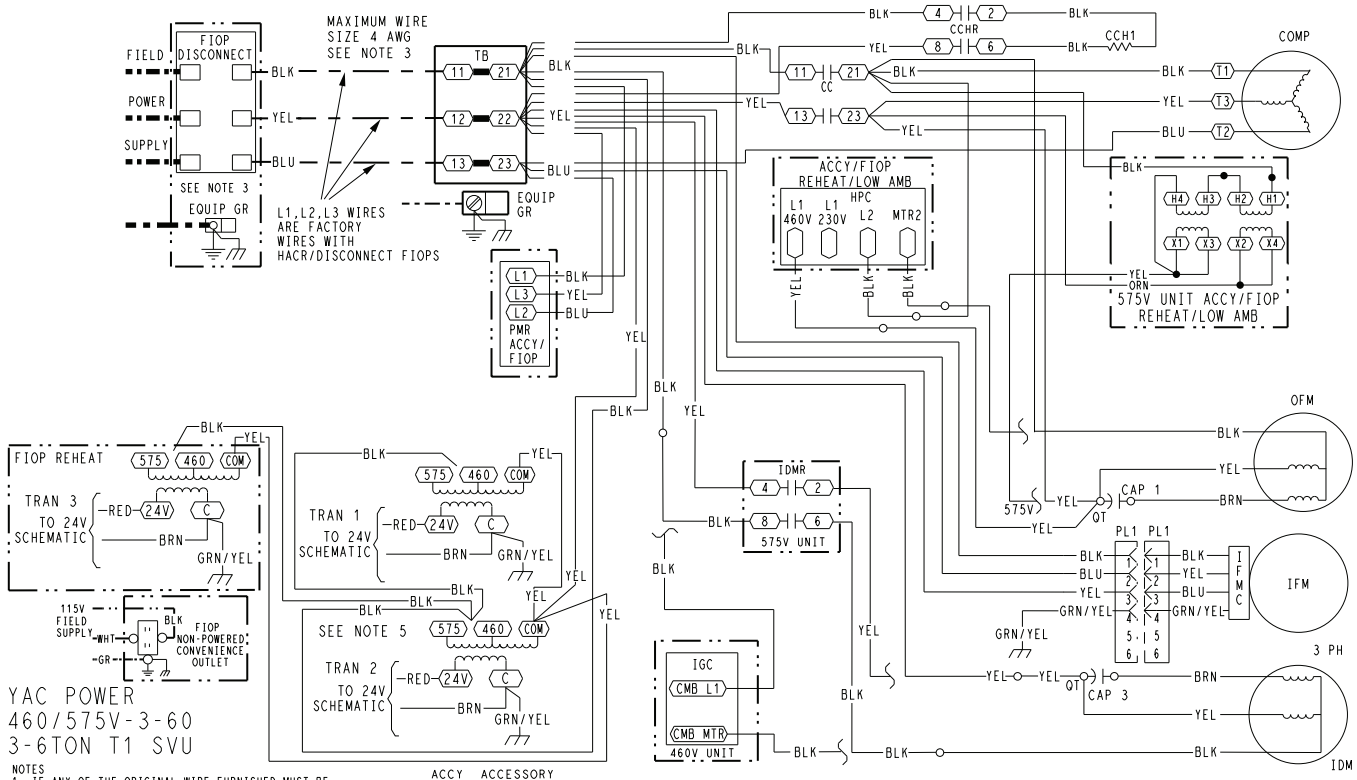

NOTES
1. IF ANY OF THE ORIGINAL WIRE FURNISHED MUST BE REPLACED, IT MUST BE REPLACED WITH TYPE 90° C WIRE OR ITS EQUIVALENT.
2. COMPRESSOR AND FAN MOTORS ARE THERMALLY PROTECTED.
3. USE COPPER CONDUCTOR ONLY.
4. DO NOT DISCONNECT POWER PLUG OR SIGNAL WIRE WHILE UNDER LOAD.
5. TRANSFORMER IS DEDICATED BASED ON UNIT VOLTAGE. TAPS ONLY SHOWN TO SIMPLIFY SCHEMATIC.

LEGEND

- MARKED WIRE
- TERMINAL (MARKED)
- TERMINAL (UNMARKED)
- TERMINAL BLOCK
- SPLICE
- SPLICE (MARKED)
- FACTORY WIRING
- FIELD CONTROL WIRING
- FIELD POWER WIRING
- CIRCUIT BOARD TRACE
- ACCESSORY OR OPTIONAL WIRING

ACCY	ACCESSORY
AUX	AUXILIARY
AWG	AMERICAN WIRE GAGE
BA	BUILDING AUTOMATION NETWORK
CC	CONTACTOR,COMPRESSOR
C	COMMON
CAP	CAPACITOR
CB	CIRCUIT BREAKER
CCH	CRANKCASE HEATER
CCHR	CRANKCASE HEATER RELAY
CCHTS	CRANKCASE HEATER TEMP SWITCH
CLO	COMPRESSOR LOCKOUT
CLV	COOLING LIQUID VALVE
CMB	CENTRIFUGAL MOTOR BLOWER
COFS	CONDENSATE OVERFLOW SWITCH
COM	SIGNAL COMMON
COMP	COMPRESSOR MOTOR
DDC	DIRECT DIGITAL CONTROL
DFB	DEFROST BOARD
DFT	DEFROST THERMOSTAT
EHR	ELECTRIC HEAT RELAY
ENTH	ENTHALPY
EQUIP	EQUIPMENT
ERV	ENERGY RECOVERY VENTILATOR
ESL	ENTHALPY SENSOR - LOW
FB	FUSE BLOCK
FIOP	FACTORY INSTALLED OPTION
FPT	FREEZE PROTECTION THERMOSTAT
FS	FLAME SWITCH
FST	FAN HOUSING TEMP SENSOR
FU	FUSE
G	THERMOSTAT FAN CALL
GR(GND)	GROUND
GV	GAS VALVE
HACR	HEATING, AIR-CONDITIONING, REFRIGERATION BREAKER
HGRH	HOT GAS REHEAT

HGRH	HOT GAS REHEAT
HPC	HEAD PRESSURE CONTROL
HPS	HIGH PRESSURE SWITCH
HR	HEATER RELAY
HUM	HUMIDISTAT
I	IGNITOR
IAQ	INDOOR AIR QUALITY SENSORS
IDM	INDUCED DRAFT MOTOR
IDMR	INDUCED DRAFT RELAY
IFM	INDOOR FAN MOTOR
IFMC	INDOOR FAN MOTOR CONTROL
IFO	INDOOR FAN ON SIGNAL
IGC	INTEGRATED GAS CONTROL
I	IGNITOR
IRH	INDOOR RELATIVE HUMIDITY
JMP	JUMPER
L1	LINE 1
LA	LOW AMBIENT LOCKOUT
LAR	LOW AMBIENT RELAY
LAS	LOW AMBIENT SWITCH
LDR	COMPRESSOR LOADER
LEN	LOCAL EQUIPMENT NETWORK
LOC	LOSS OF CHARGE
LOOP PWR	CURRENT LOOP POWER
LPS	LOW PRESSURE SWITCH
LS	LIMIT SWITCH
LSM	LIMIT SWITCH (MANUAL RESET)
LTLO	LOW TEMP LOCKOUT
MBB	MAIN BASE BOARD
MOV	METAL OXIDE VARISTOR
MTR	MOTOR
OAQ	OUTDOOR AIR QUALITY
OAT	OUTDOOR AIR TEMP. SEN
OFM	OUTDOOR FAN MOTOR
OFR	OUTDOOR FAN RELAY
OL	OVERLOAD

PER	POWER EXHAUST RELAY
PH	PHASE
PL	PLUG ASSEMBLY
POT	POTENTIOMETER
PMR	PHASE MONITOR RELAY
PS	PRESSURE SWITCH
PWM	PULSE WIDTH MODULATION
QT	QUADRUPLE TERMINAL
R	THERMOSTAT POWER
RAT	RETURN AIR TEMP. SENSOR
RDB	REFRIGERANT DISSIPATION BOARD
RDS	REFRIGERANT DISSIPATION SENSOR
RDV	REHEAT DISCHARGE VALVE
RH	RELATIVE HUMIDITY
RLV	REHEAT LIQUID VALVE
RNET	LOCAL ACCESS NETWORK
RS	ROLLOUT SWITCH
RVS	REVERSING VALVE SOLENOID
SAT	SUPPLY AIR TEMP SENSOR
SDP	SYSTEM DISCHARGE PRESSURE
SPRH	SPACE RELATIVE HUMIDITY
SPT	SPACE TEMPERATURE SENSOR
SPTO	SPACE TEMPERATURE OFFSET
SSP	SYSTEM SUCTION PRESSURE
STD	STANDARD
SW	SWITCH
TB	TERMINAL BLOCK
TDR	TIME DELAY RELAY
TRAN	TRANSFORMER
UCB	UNIT CONTROL BOARD
W1	1st STAGE OF HEATING CALL
W2	2nd STAGE OF HEATING CALL
Y1	1st STAGE OF COOLING CALL
Y2	2nd STAGE OF COOLING CALL

48TC003008 | G

Typical Power Wiring Diagram for SystemVu™ Controller Units, 48FE 04-06 Ultra Low NOx, 460-3-60 Units Shown

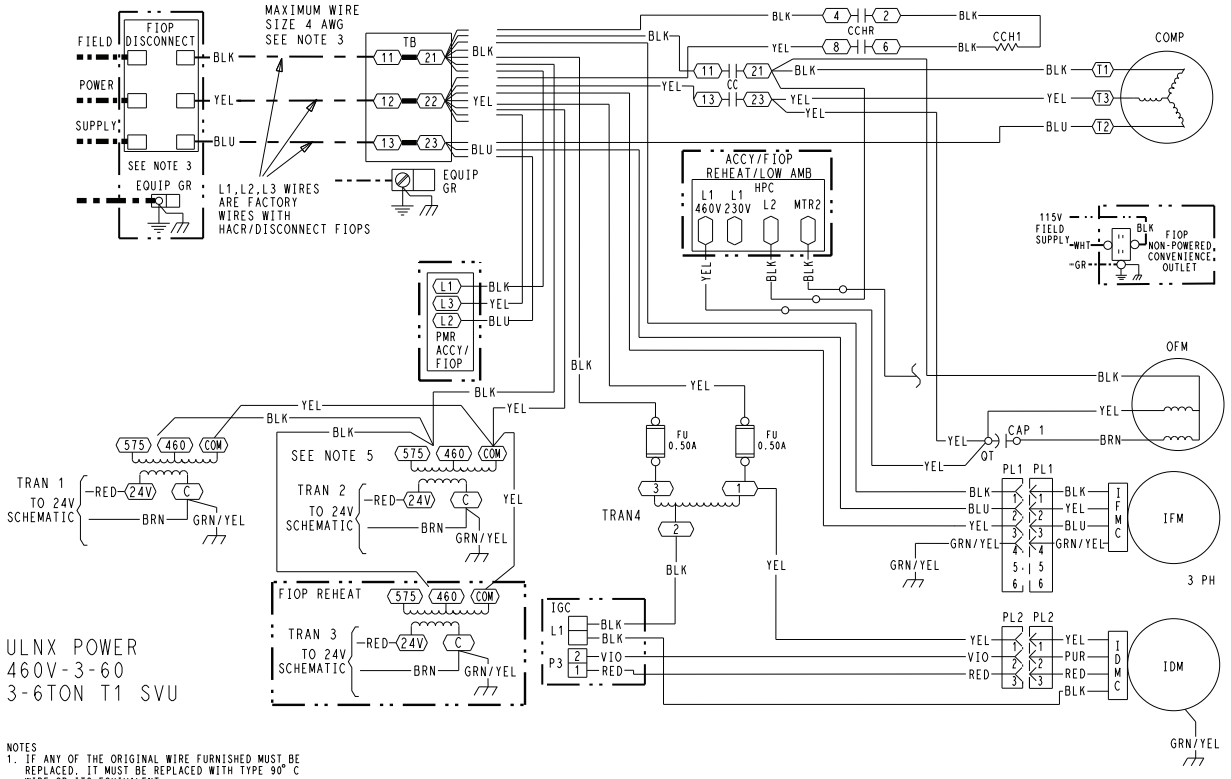

NOTES
1. IF ANY OF THE ORIGINAL WIRE FURNISHED MUST BE REPLACED, IT MUST BE REPLACED WITH TYPE 90° C WIRE OR ITS EQUIVALENT.
2. COMPRESSOR AND FAN MOTORS ARE THERMALLY PROTECTED.
3. USE COPPER CONDUCTOR ONLY.
4. DO NOT DISCONNECT POWER PLUG OR SIGNAL WIRE WHILE UNDER LOAD.
5. TRANSFORMER IS DEDICATED BASED ON UNIT VOLTAGE. TAPS ONLY SHOWN TO SIMPLIFY SCHEMATIC.

LEGEND

- MARKED WIRE
- TERMINAL (MARKED)
- TERMINAL (UNMARKED)
- TERMINAL BLOCK
- SPLICE
- SPLICE (MARKED)
- FACTORY WIRING
- FIELD CONTROL WIRING
- FIELD POWER WIRING
- CIRCUIT BOARD TRACE
- ACCESSORY OR OPTIONAL WIRING

ACCY	ACCESSORY
AUX	AUXILIARY
AWG	AMERICAN WIRE GAUGE
BA	BUILDING AUTOMATION NETWORK
CC	CONTACTOR,COMPRESSOR
C	COMMON
CAP	CAPACITOR
CB	CIRCUIT BREAKER
CCH	CRANKCASE HEATER
CCHR	CRANKCASE HEATER RELAY
CCHTS	CRANKCASE HEATER TEMP SWITCH
CLO	COMPRESSOR LOCKOUT
CLV	COOLING LIQUID VALVE
CMB	CENTRIFUGAL MOTOR BLOWER
COFS	CONDENSATE OVERFLOW SWITCH
COM	SIGNAL COMMON
COMP	COMPRESSOR MOTOR
DDC	DIRECT DIGITAL CONTROL
DFB	DEFROST BOARD
DFT	DEFROST THERMOSTAT
EHR	ELECTRIC HEAT RELAY
ENTH	ENTHALPY
EQUIP	EQUIPMENT
ERV	ENERGY RECOVERY VENTILATOR
ESL	ENTHALPY SENSOR - LOW
FB	FUSE BLOCK
FIOP	FACTORY INSTALLED OPTION
FPT	FREEZE PROTECTION THERMOSTAT
FS	FLAME SWITCH
FST	FAN HOUSING TEMP SENSOR
FU	FUSE
G	THERMOSTAT FAN CALL
GR(GND)	GROUND
GV	GAS VALVE
HACR	HEATING, AIR-CONDITIONING, REFRIGERATION BREAKER
HGRH	HOT GAS REHEAT
HGRH	HOT GAS REHEAT
HPC	HEAD PRESSURE CONTROL
HPS	HIGH PRESSURE SWITCH
HR	HEATER RELAY
HUM	HUMIDISTAT
I	IGNITOR
IAQ	INDOOR AIR QUALITY SENSORS
IDM	INDUCED DRAFT MOTOR
IDMC	INDUCER DRAFT MOTOR CONTROLLER
IDMR	INDUCED DRAFT RELAY
IFM	INDOOR FAN MOTOR
IFMC	INDOOR FAN MOTOR CONTROL
IFO	INDOOR FAN ON SIGNAL
IGC	INTEGRATED GAS CONTROL
I	IGNITOR
IRH	INDOOR RELATIVE HUMIDITY
JMP	JUMPER
L1	LINE 1
LA	LOW AMBIENT LOCKOUT
LAR	LOW AMBIENT RELAY
LAS	LOW AMBIENT SWITCH
LDR	COMPRESSOR LOADER
LEN	LOCAL EQUIPMENT NETWORK
LOC	LOSS OF CHARGE
LOOP PWR	CURRENT LOOP POWER
LPS	LOW PRESSURE SWITCH
LS	LIMIT SWITCH
LSM	LIMIT SWITCH (MANUAL RESET)
LTLO	LOW TEMP LOCKOUT
MBB	MAIN BASE BOARD
MOV	METAL OXIDE VARISTOR
MTR	MOTOR
OAQ	OUTDOOR AIR QUALITY
OAT	OUTDOOR AIR TEMP. SEN
OFM	OUTDOOR FAN MOTOR
OFR	OUTDOOR FAN RELAY
OL	OVERLOAD
PER	POWER EXHAUST RELAY
PH	PHASE
PL	PLUG ASSEMBLY
POT	POTENTIOMETER
PMR	PHASE MONITOR RELAY
PS	PRESSURE SWITCH
PWM	PULSE WIDTH MODULATION
QT	QUADRUPLE TERMINAL
R	THERMOSTAT POWER
RAT	RETURN AIR TEMP. SEN
RDV	REHEAT DISCHARGE VALVE
RH	RELATIVE HUMIDITY
RLV	REHEAT LIQUID VALVE
RNET	LOCAL ACCESS NETWORK
RS	ROLLOUT SWITCH
RVS	REVERSING VALVE SOLENOID
SAT	SUPPLY AIR TEMP SENSOR
SDP	SYSTEM DISCHARGE PRESSURE
SPRH	SPACE RELATIVE HUMIDITY
SPT	SPACE TEMPERATURE SENSOR
SPTO	SPACE TEMPERATURE OFFSET
SSP	SYSTEM SUCTION PRESSURE
STD	STANDARD
SW	SWITCH
TB	TERMINAL BLOCK
TDR	TIME DELAY RELAY
TRAN	TRANSFORMER
UCB	UNIT CONTROL BOARD
W1	1st STAGE OF HEATING CALL
W2	2nd STAGE OF HEATING CALL
Y1	1st STAGE OF COOLING CALL
Y2	2nd STAGE OF COOLING CALL

48TC004293 | G

Typical Control Wiring Diagram — Electromechanical with POL224 — 50FE 04-06 Units Shown

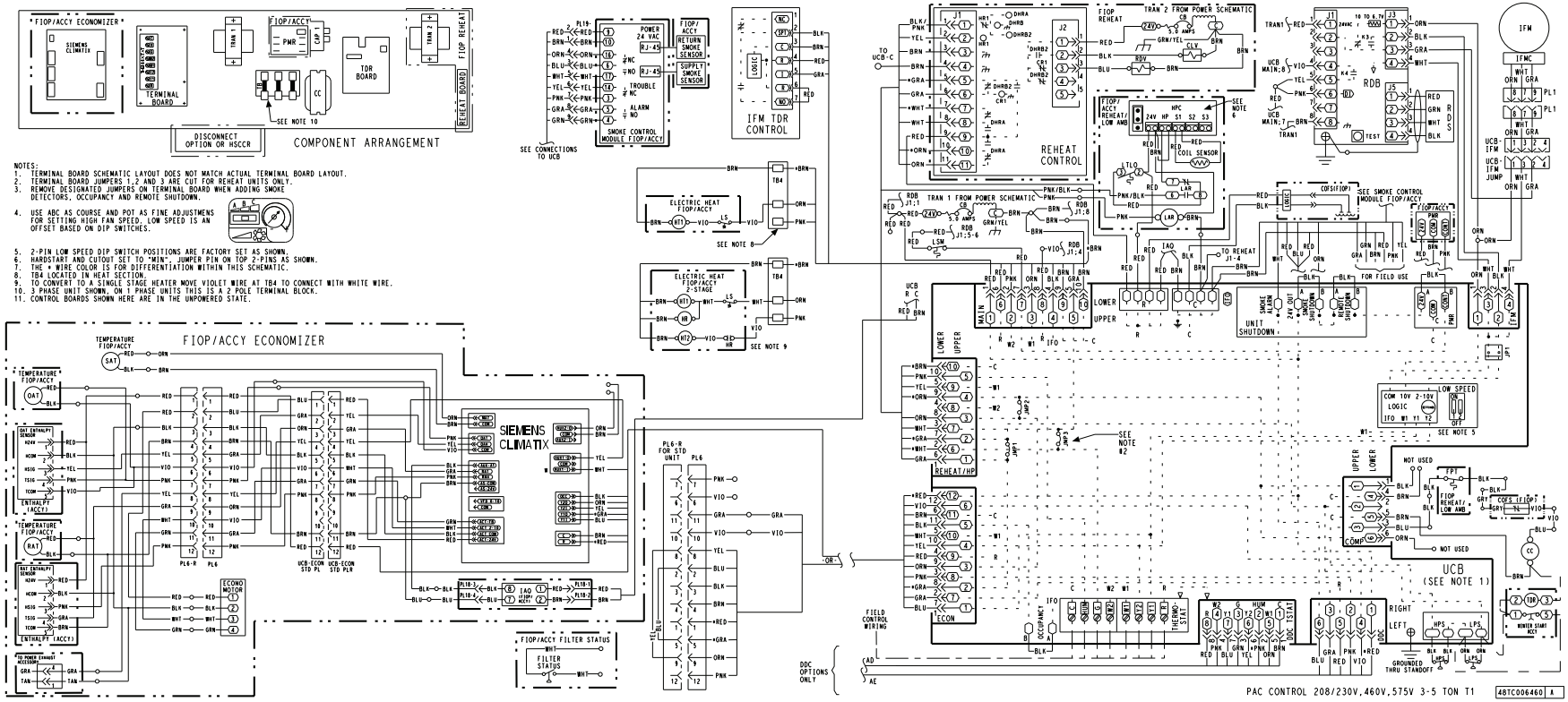

Typical Control Wiring Diagram — Electromechanical with POL224 — 50FE 07 Units Shown

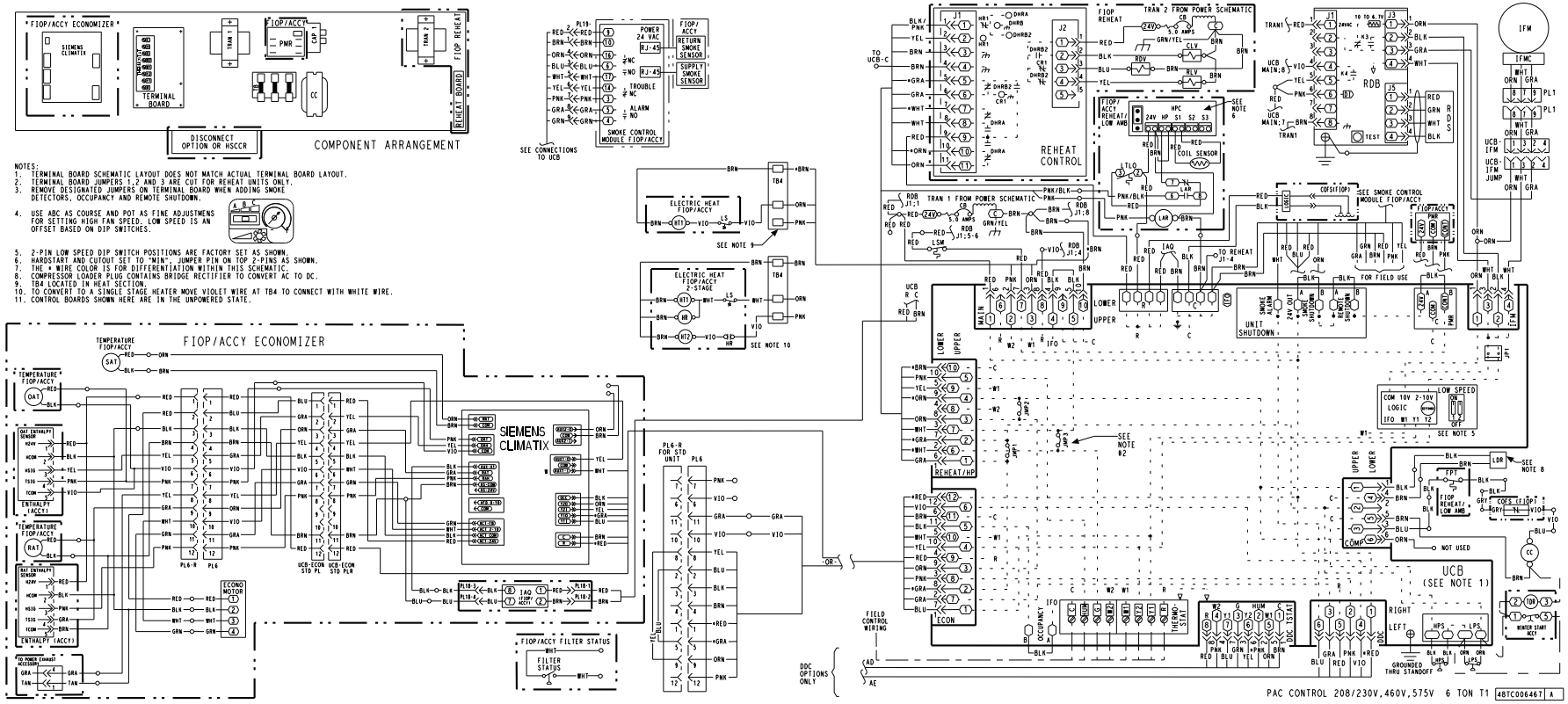

Typical Control Wiring Diagram— SystemVu™ Controller —50FE 04-06 Unit Shown

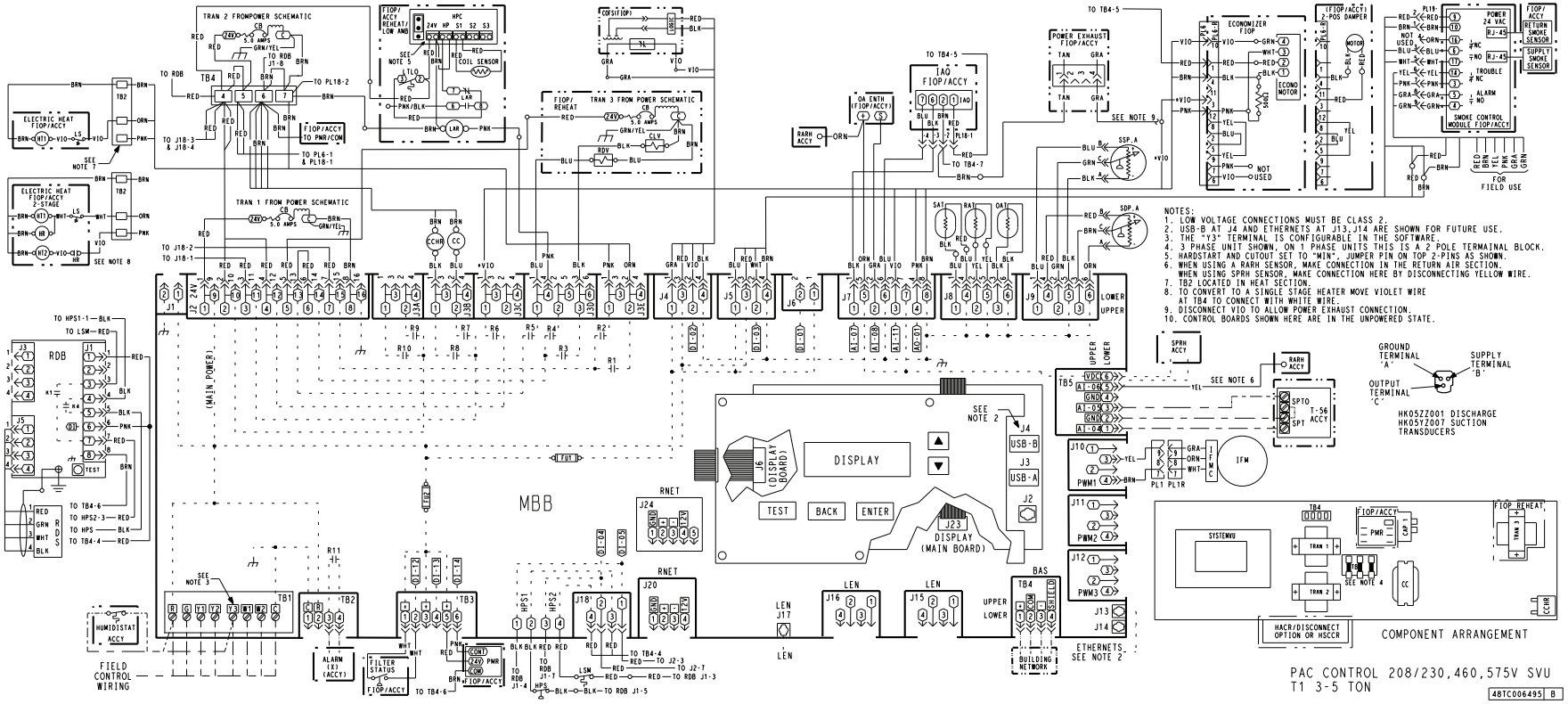

Typical Control Wiring Diagram— SystemVu™ Controller —50FE 07 Unit Shown

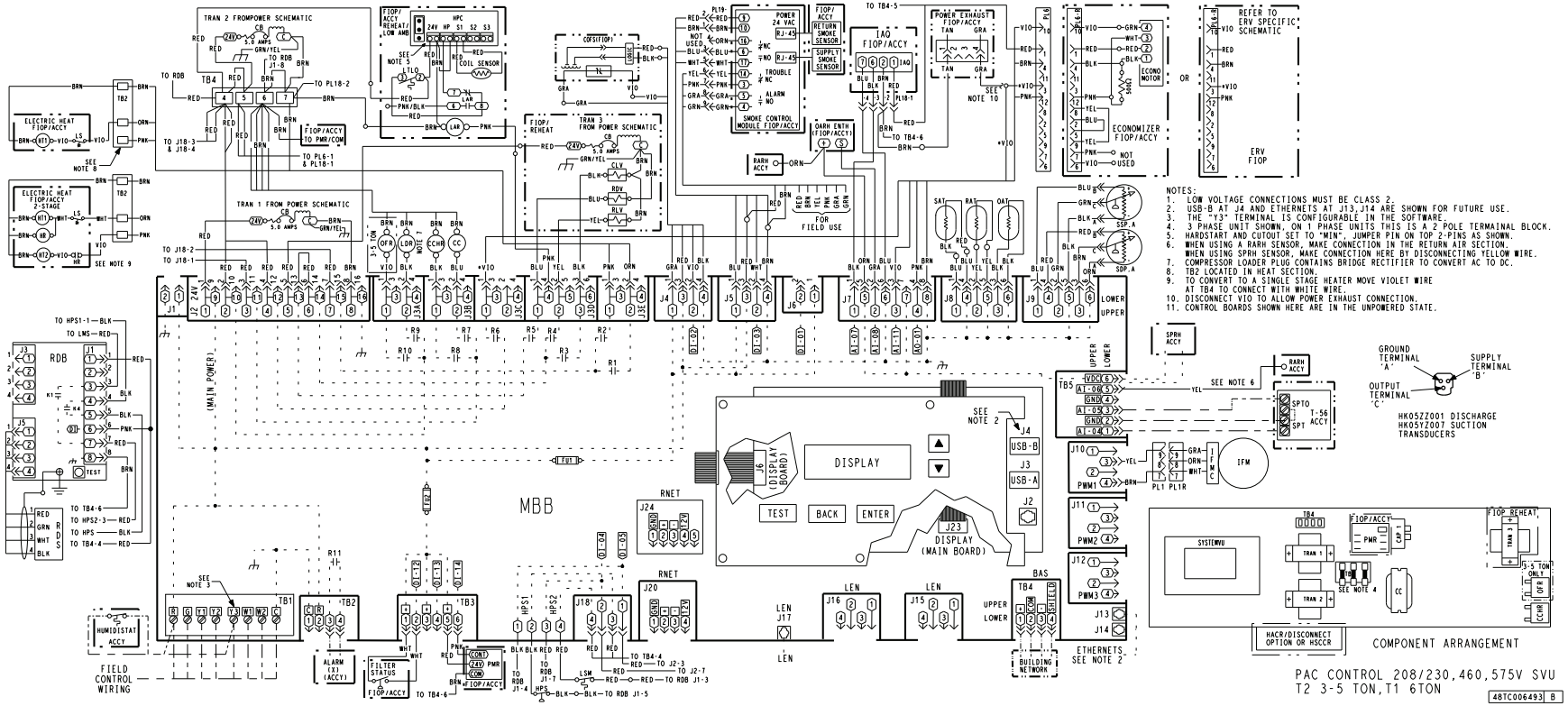

Typical 50FE 04-07 Power Wiring Diagram, 460/575-v Unit Shown

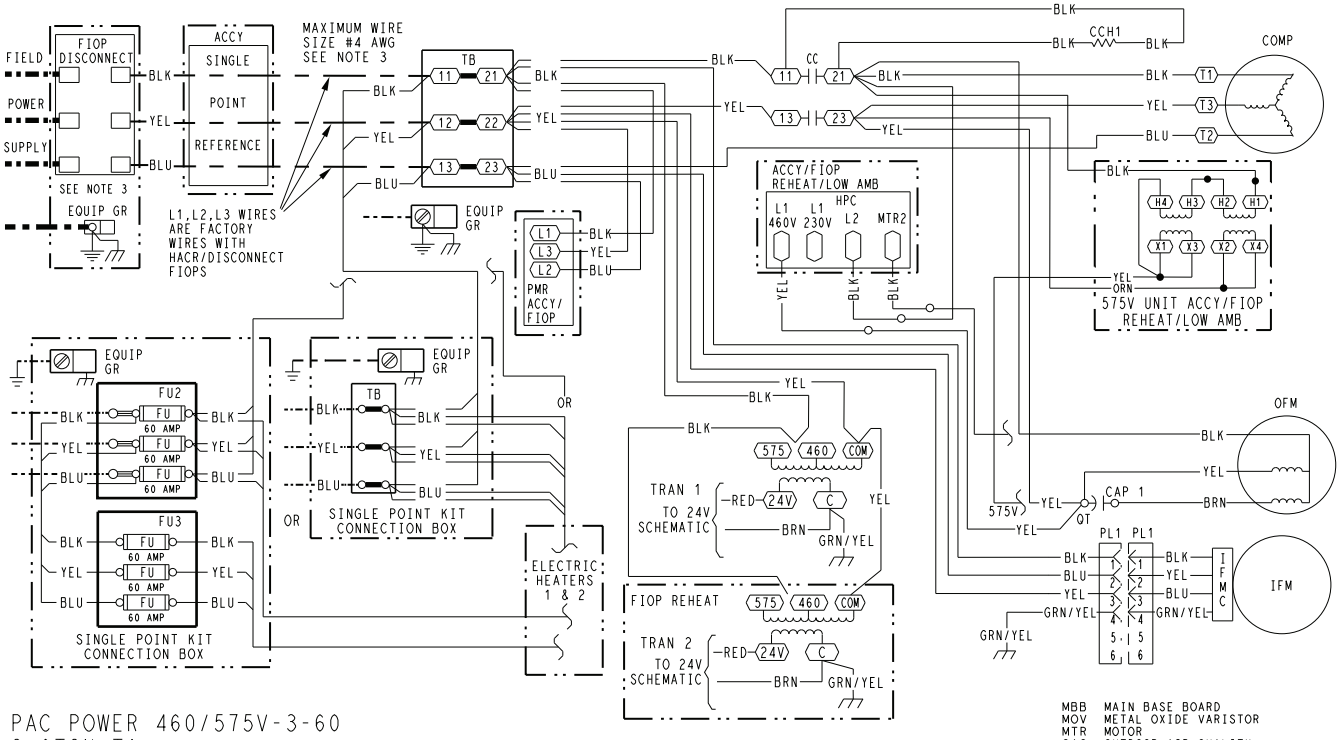

PAC POWER 460/575V-3-60
3-6TON T1

NOTES
1. IF ANY OF THE ORIGINAL WIRE FURNISHED MUST BE REPLACED. IT MUST BE REPLACED WITH TYPE 90° C WIRE OR ITS EQUIVALENT.
2. COMPRESSOR AND FAN MOTORS ARE THERMALLY PROTECTED.
3. USE COPPER CONDUCTOR ONLY.
4. DO NOT DISCONNECT POWER PLUG OR SIGNAL WIRE WHILE UNDER LOAD.
5. TRANSFORMER IS DEDICATED BASED ON UNIT VOLTAGE. TAPS ONLY SHOWN TO SIMPLIFY SCHEMATIC.

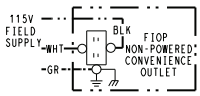

LEGEND

- (X) MARKED WIRE
- (X) TERMINAL (MARKED)
- ○ TERMINAL (UNMARKED)
- [X] TERMINAL BLOCK
- ● SPLICE
- (●) SPLICE (MARKED)
- FACTORY WIRING
- FIELD CONTROL WIRING
- FIELD POWER WIRING
- CIRCUIT BOARD TRACE
- ACCESSORY OR OPTIONAL WIRING

ACCY	ACCESSORY
AWG	AMERICAN WIRE GAGE
BAS	BUILDING AUTOMATION NETWORK
CC	CONTACTOR,COMPRESSOR
C	COMMON
CAP	CAPACITOR
CB	CIRCUIT BREAKER
CCH	CRANKCASE HEATER
CCHR	CRANKCASE HEATER RELAY
CCHTS	CRANKCASE HEATER TEMP SWITCH
CLO	COMPRESSOR LOCKOUT
CLV	COOLING LIQUID VALVE
COFS	CONDENSATE OVERFLOW SWITCH
COM	SIGNAL COMMON
COMP	COMPRESSOR MOTOR
DDC	DIRECT DIGITAL CONTROL
DFB	DEFROST BOARD
DFT	DEFROST THERMOSTAT
EHR	ELECTRIC HEAT RELAY
ENTH	ENTHALPY
ERV	ENERGY RECOVERY VENTILATOR
ESL	ENTHALPY SENSOR - LOW
FB	FUSE BLOCK
FIOP	FACTORY INSTALLED OPTION
FPT	FREEZE PROTECTION THERMOSTAT
FST	FAN HOUSING TEMP SENSOR
FU	FUSE
G	THERMOSTAT FAN CALL
GR(GND)	GROUND
HACR	HEATING, AIR-CONDITIONING, REFRIGERATION BREAKER
HR	HEATER RELAY
HGRH	HOT GAS REHEAT
HPC	HEAD PRESSURE CONTROL
HPS	HIGH PRESSURE SWITCH
HUM	HUMIDISTAT
IAQ	INDOOR AIR QUALITY SENSORS
IFM	INDOOR FAN MOTOR
IFMC	INDOOR FAN MOTOR CONTROL
IFO	INDOOR FAN ON SIGNAL
IRH	INDOOR RELATIVE HUMIDITY
JMP	JUMPER
L1	LINE 1
LA	LOW AMBIENT LOCKOUT
LAR	LOW AMBIENT RELAY
LAS	LOW AMBIENT SWITCH
LDR	COMPRESSOR LOADER
LEN	LOCAL EQUIPMENT NETWORK
LOC	LOSS OF CHARGE
LOOP PWR	CURRENT LOOP POWER
LPS	LOW PRESSURE SWITCH
LS	LIMIT SWITCH
LSM	LIMIT SWITCH (MANUAL RESET)
LTLO	LOW TEMP LOCKOUT
MBB	MAIN BASE BOARD
MOV	METAL OXIDE VARISTOR
MTR	MOTOR
OAQ	OUTDOOR AIR QUALITY
OAT	OUTDOOR AIR TEMP. SEN
OFM	OUTDOOR FAN MOTOR
OFR	OUTDOOR FAN RELAY
OL	OVERLOAD
PER	POWER EXHAUST RELAY
PH	PHASE
PL	PLUG ASSEMBLY
POT	POTENTIOMETER
PMR	PHASE MONITOR RELAY
PS	PRESSURE SWITCH
PWM	PULSE WIDTH MODULATION
QT	QUADRUPLE TERMINAL
R	THERMOSTAT POWER
RAT	RETURN AIR TEMP. SEN
RDB	REFRIGERANT DISSIPATION BOARD
RDS	REFRIGERANT DISSIPATION SENSOR
RDV	REHEAT DISCHARGE VALVE
RH	RELATIVE HUMIDITY
RLV	REHEAT LIQUID VALVE
RNET	LOCAL ACCESS NETWORK
RVS	REVERSING VALVE SOLENOID
SAT	SUPPLY AIR TEMP SENSOR
SDP	SYSTEM DISCHARGE PRESSURE
SPRH	SPACE RELATIVE HUMIDITY
SPT	SPACE TEMPERATURE SENSOR
SPTO	SPACE TEMPERATURE OFFSET
SSP	SYSTEM SUCTION PRESSURE
SW	SWITCH
TB	TERMINAL BLOCK
TDR	TIME DELAY RELAY
TRAN	TRANSFORMER
UCB	UNIT CONTROL BOARD
W1	1st STAGE OF HEATING CALL
W2	2nd STAGE OF HEATING CALL
Y1	1st STAGE OF COOLING CALL
Y2	2nd STAGE OF COOLING CALL

48TC002995 | G

Typical Power Wiring Diagram for SystemVu™ Controller Units, 50FE 04-07, 460/575-3-60 Units Shown

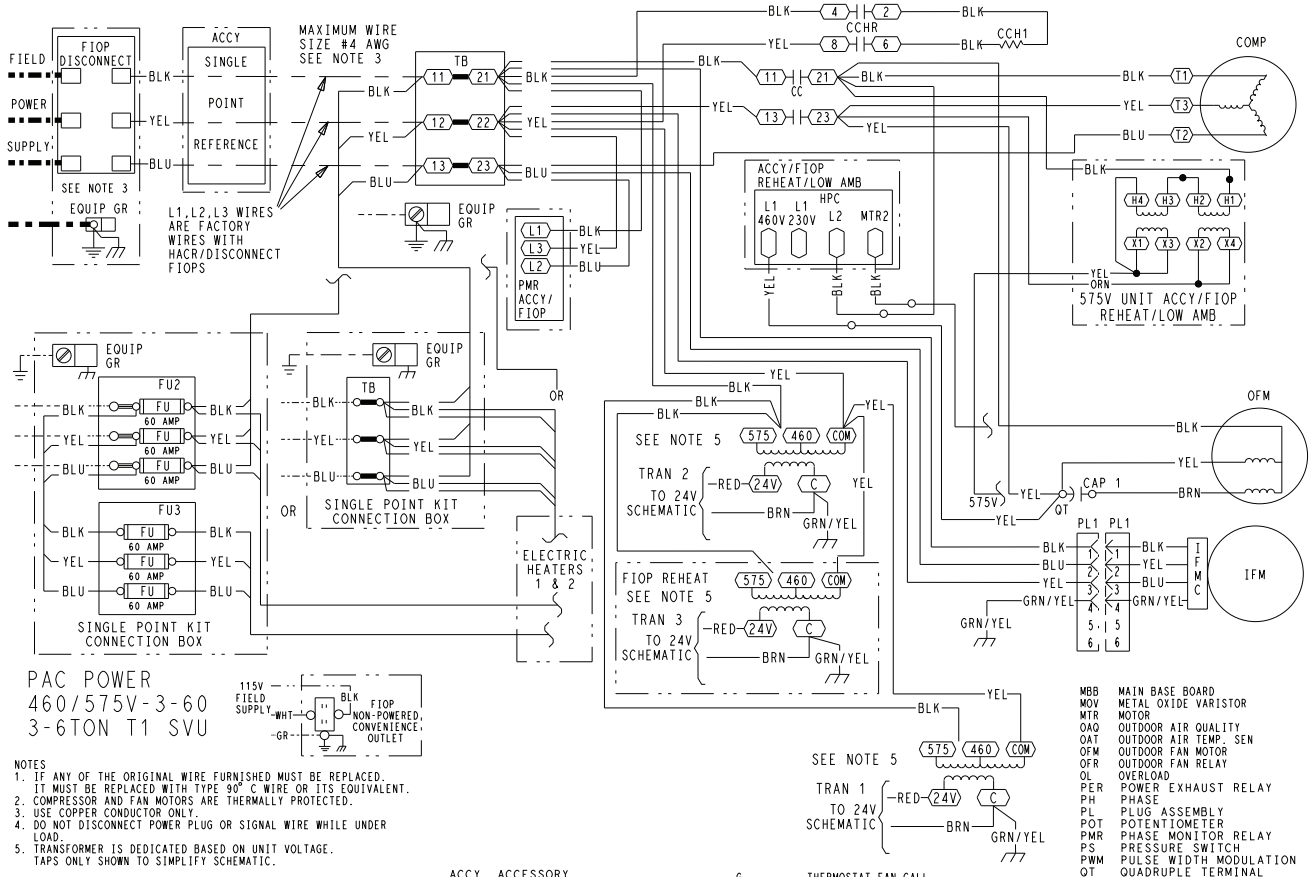

NOTES
1. IF ANY OF THE ORIGINAL WIRE FURNISHED MUST BE REPLACED. IT MUST BE REPLACED WITH TYPE 90° C WIRE OR ITS EQUIVALENT.
2. COMPRESSOR AND FAN MOTORS ARE THERMALLY PROTECTED.
3. USE COPPER CONDUCTOR ONLY.
4. DO NOT DISCONNECT POWER PLUG OR SIGNAL WIRE WHILE UNDER LOAD.
5. TRANSFORMER IS DEDICATED BASED ON UNIT VOLTAGE. TAPS ONLY SHOWN TO SIMPLIFY SCHEMATIC.

LEGEND

- MARKED WIRE
- TERMINAL (MARKED)
- TERMINAL (UNMARKED)
- TERMINAL BLOCK
- SPLICE
- SPLICE (MARKED)
- FACTORY WIRING
- FIELD CONTROL WIRING
- FIELD POWER WIRING
- CIRCUIT BOARD TRACE
- ACCESSORY OR OPTIONAL WIRING

ACCY	ACCESSORY
AWG	AMERICAN WIRE GAGE
BAS	BUILDING AUTOMATION NETWORK
CC	CONTACTOR,COMPRESSOR
C	COMMON
CAP	CAPACITOR
CB	CIRCUIT BREAKER
CCH	CRANKCASE HEATER
CCHR	CRANKCASE HEATER RELAY
CCHTS	CRANKCASE HEATER TEMP SWITCH
CLO	COMPRESSOR LOCKOUT
CLV	COOLING LIQUID VALVE
COFS	CONDENSATE OVERFLOW SWITCH
COM	SIGNAL COMMON
COMP	COMPRESSOR MOTOR
DDC	DIRECT DIGITAL CONTROL
DFB	DEFROST BOARD
DFT	DEFROST THERMOSTAT
EHR	ELECTRIC HEAT RELAY
ENTH	ENTHALPY
ERV	ENERGY RECOVERY VENTILATOR
ESL	ENTHALPY SENSOR - LOW
FB	FUSE BLOCK
FIOP	FACTORY INSTALLED OPTION
FPT	FREEZE PROTECTION THERMOSTAT
FST	FAN HOUSING TEMP SENSOR
FU	FUSE
G	THERMOSTAT FAN CALL
GR(GND)	GROUND
HACR	HEATING, AIR-CONDITIONING, REFRIGERATION BREAKER
HR	HEATER RELAY
HGRH	HOT GAS REHEAT
HPC	HEAD PRESSURE CONTROL
HPS	HIGH PRESSURE SWITCH
HUM	HUMIDISTAT
IAQ	INDOOR AIR QUALITY SENSORS
IFM	INDOOR FAN MOTOR
IFMC	INDOOR FAN MOTOR CONTROL
IFO	INDOOR FAN ON SIGNAL
IRH	INDOOR RELATIVE HUMIDITY
JMP	JUMPER
L1	LINE 1
LA	LOW AMBIENT LOCKOUT
LAR	LOW AMBIENT RELAY
LAS	LOW AMBIENT SWITCH
LDR	COMPRESSOR LOADER
LEN	LOCAL EQUIPMENT NETWORK
LOC	LOSS OF CHARGE
LOOP PWR	CURRENT LOOP POWER
LPS	LOW PRESSURE SWITCH
LS	LIMIT SWITCH
LSM	LIMIT SWITCH (MANUAL RESET)
LTLO	LOW TEMP LOCKOUT
MBB	MAIN BASE BOARD
MOV	METAL OXIDE VARISTOR
MTR	MOTOR
OAQ	OUTDOOR AIR QUALITY
OAT	OUTDOOR AIR TEMP. SEN
OFM	OUTDOOR FAN MOTOR
OFR	OUTDOOR FAN RELAY
OL	OVERLOAD
PER	POWER EXHAUST RELAY
PH	PHASE
PL	PLUG ASSEMBLY
POT	POTENTIOMETER
PMR	PHASE MONITOR RELAY
PS	PRESSURE SWITCH
PWM	PULSE WIDTH MODULATION
QT	QUADRUPLE TERMINAL
R	THERMOSTAT POWER
RAT	RETURN AIR TEMP. SEN
RDB	REFRIGERANT DISSIPATION BOARD
RDS	REFRIGERANT DISSIPATION SENSOR
RDV	REHEAT DISCHARGE VALVE
RH	RELATIVE HUMIDITY
RLV	REHEAT LIQUID VALVE
RNET	LOCAL ACCESS NETWORK
RVS	REVERSING VALVE SOLENOID
SAT	SUPPLY AIR TEMP SENSOR
SDP	SYSTEM DISCHARGE PRESSURE
SPRH	SPACE RELATIVE HUMIDITY
SPT	SPACE TEMPERATURE SENSOR
SPTO	SPACE TEMPERATURE OFFSET
SSP	SYSTEM SUCTION PRESSURE
SW	SWITCH
TB	TERMINAL BLOCK
TDR	TIME DELAY RELAY
TRAN	TRANSFORMER
UCB	UNIT CONTROL BOARD
W1	1st STAGE OF HEATING CALL
W2	2nd STAGE OF HEATING CALL
Y1	1st STAGE OF COOLING CALL
Y2	2nd STAGE OF COOLING CALL

48TC003011 | H

Sequence of operation

General

The sequence below describes the sequence of operation for an electromechanical unit with and without a factory-installed EconomizerONE (POL224 controller). For information regarding a direct digital controller, see the start-up, operations, and troubleshooting manual for the applicable controller.

Dissipation

When the factory-installed dissipation system detects a level of refrigerant leak in the unit, a safety dissipation mode will be activated. During this dissipation mode, the thermostat will be disabled and the indoor fan will run at 66% of the maximum speed of the motor. When the refrigerant leak levels are normal for 5 minutes, the unit will return to normal operation.

Electromechanical units without economizer

Cooling (single stage units)

When the thermostat calls for cooling, terminals G and Y1 are energized. The indoor fan will run at the user-set fan speed and the compressor contactor (CC) is energized, causing the compressor and outdoor fan to run.

When the thermostat removes the call for Y1, the compressor contactor will de-energize, shutting down the compressor and the outdoor fan. When the thermostat removes the call for G, the indoor fan will turn off after the specific unit fan off delay.

Cooling (2-stage units)

When the thermostat calls for cooling, terminals G and Y1 are energized. The indoor fan will run at the low fan speed and the compressor contactor (CC) is energized, causing the compressor and outdoor fan to run. The low indoor fan speed is 66% of the user-set fan speed, and the compressor will run at partial capacity.

If additional cooling is needed, then the thermostat will add the call for Y2. This will increase the indoor fan speed to the user-set fan speed and energize the compressor loader for full compressor capacity. The outdoor fan is the same speed for Y1 and Y2.

When the thermostat removes the call for Y2 but leaves the Y1, the indoor fan will reduce speed to 66% of the user-set fan speed, the compressor loader will turn off, and the outdoor fan will remain on. When the thermostat removes the call for Y1, the compressor contactor will de-energize, shutting down the compressor and the outdoor fan. When the thermostat removes the call for G, the indoor fan will turn off after the specific unit fan off delay.

NOTE: Per ASHRAE 90.1-2016 and IECC-2018 standards, during the first stage of cooling operation, the Unit Control Board (UCB) will adjust the fan motor speed to provide 66% of the total cfm established for the unit.

Gas heating (48FE units)

NOTE: WeatherMaker® units have either 1 or 2 stages of gas heat.

When the thermostat calls for heating, power is sent to W on the Integrated Gas Controller (IGC) board. An LED (light-emitting diode) on the IGC board turns on and remains on during normal operation. A check is made to ensure that the roll-out switch and limit switch are closed. If the check was successful, then the induced draft motor is energized, and when its speed is satisfactory, as proven by the flue gas pressure switch, the ignition activation period begins. The burners will ignite within 5 seconds. If the burners do not light, then there is a 22-second delay before another 5-second attempt. This sequence is repeated for 15 minutes or until the burners light. If, after the 15 minutes, the burners still have not lit, heating is locked out. To reset the control, break 24-v power to the thermostat.

When ignition occurs, the IGC board will continue to monitor the condition of the roll-out switch, the limit switches, the flue gas pressure switch, and the flame sensor. Forty-five seconds after ignition occurs, assuming the unit is controlled through a room thermostat set for fan auto, the indoor-fan motor will energize (and the outdoor-air dampers will open to their minimum position). If, for some reason, the over-temperature limit opens prior to the start of the indoor fan blower, then the unit will shorten the 45 second delay to 5 seconds less than the time from initiation of heat to when the limit tripped. Gas will not be interrupted to the burners and heating will continue. Once the fan-on delay has been modified, it will not change back to 45 seconds until power is reset to the control. On units with 2 stages of heat, when additional heat is required, W2 closes and initiates power to the second stage of the main gas valve. When the thermostat is satisfied, W1 and W2 open and the gas valve closes, interrupting the flow of gas to the main burners. If the unit is controlled through a room thermostat set for fan auto, then the indoor fan motor will continue to operate for an additional 45 second and then stop. An LED indicator is provided on the IGC to monitor operation.

Electric heating (50FE units)

NOTE: 50FE units are sold as cooling only. If electric heaters are required, use only factory-approved heaters. They will operate as follows.

Units have either 1 or 2 stages of electric heat. When the thermostat calls for heating, power is applied to G and the W1 terminals at the unit. The unit control will energize the indoor fan contactor and the first stage of electric heat. On units with 2-stage heating, when additional heating is required, the second stage of electric heat (if equipped) will be energized when power is applied at the W2 terminal on the unit.

IMPORTANT: The thermostat must be configured for Electric Heat so it will energize G with the W1 call.

Electromechanical units with factory-installed EconomizerONE

When free cooling is not available, the compressors will be controlled by the zone thermostat. When free cooling is available, the outdoor-air damper is modulated by the EconomizerONE control to provide a 50°F (10°C) to 55°F (13°C) mixed-air temperature into the zone. As the mixed air temperature fluctuates above 55°F (13°C) or below 50°F (10°C), dampers will be modulated (open or close) to bring the mixed-air temperature back within control. If mechanical cooling is utilized with free cooling, then the outdoor-air damper will maintain its current position at the time the compressor is started. If the increase in cooling capacity causes the mixed-air temperature to drop below 45°F (7°C), then the outdoor-air damper position will be decreased to the minimum position. If the mixed-air temperature continues to fall, then the outdoor-air damper will

close. Control returns to normal once the mixed-air temperature rises above 48°F (9°C). The power exhaust fans will be energized and de-energized, if installed, as the outdoor-air damper opens and closes.

If field-installed accessory CO_2 sensors are connected to the EconomizerONE control, then a demand-controlled ventilation strategy will begin to operate. As the CO_2 level in the zone increases above the CO_2 setpoint (on the EconomizerONE controller), the minimum position of the damper will be increased proportionally until the Maximum Ventilation setting is reached. As the CO_2 level decreases because of the increase in fresh air, the outdoor-air damper will follow the higher demand condition from either the DCV mode or from the free cooling mode. For EconomizerONE operation, there must be a thermostat call for the fan (G). If the unit is occupied and the fan is on, then the damper will operate at minimum position. Otherwise, the damper will be closed.

When the EconomizerONE control is in the occupied mode and a call for cooling exists (Y1 on the thermostat), the control will first check for indoor fan operation. If the fan is not on, then cooling will not be activated. If the fan is on, then the control will open the EconomizerONE damper to the minimum position.

On the initial power to the EconomizerONE control, it will take the damper up to 2-1/2 minutes before it begins to position itself. After the initial power-up, further changes in damper position can take up to 90 seconds to initiate. Damper movement from fully closed to fully open (or vice versa) will take between 1-1/2 and 2-1/2 minutes. If free cooling can be used, as determined from the appropriate changeover command (dry bulb, outdoor enthalpy, differential dry bulb, or differential enthalpy), then the control will modulate the dampers open and closed to maintain the mixed-air temperature setpoint at 50°F (10°C) to 55°F (13°C). If there is a further demand for cooling (cooling second stage — Y2 is energized), then the control will bring on compressor stage 1 to maintain the mixed-air temperature setpoint. The EconomizerONE damper will be open at maximum position.

NOTE: For 2-speed units, the EconomizerONE controller will adjust the damper position as the Indoor Fan Speed changes, per its configured values.

Heating

The sequence of operation for heating is the same as for an electromechanical unit without an economizer. The only difference is how the economizer acts. The economizer will stay at the Economizer Minimum Position while the evaporator fan is operating. The outdoor-air damper is closed when the indoor fan is not operating. Refer to the unit's service and maintenance manual for further details.

Optional Humidi-MiZer® dehumidification system

Units with the factory-installed Humidi-MiZer system option are capable of providing multiple modes of improved dehumidification as a variation of the normal cooling cycle. The Humidi-MiZer system includes additional valves in the liquid line and discharge line of each refrigerant circuit, a small reheat condenser coil downstream of the evaporator, and variable-speed control of some or all outdoor fans. Operation of the revised refrigerant circuit for each mode is described below.

The Humidi-MiZer system provides 3 sub-modes of operation: Cool, Reheat1, and Reheat2.

Cool — provides a normal ratio of sensible and latent cooling effect from the evaporator coil.

Reheat1 — provides increased latent cooling while slightly reducing the sensible cooling effect.

Reheat2 — provides normal latent cooling but with null or minimum sensible cooling effect delivered to the space.

The Reheat1 and Reheat2 modes are available when the unit is not in a heating mode and when the low ambient lockout switch is closed.

Refer to the figures that follow for single stage and 2 stage piping flow diagrams.

SystemVu™ controller (factory option)

For details on operating 48/50FE units equipped with the factory-installed SystemVu controller option, refer to the *FE/GE Series Single Package Rooftop Units with SystemVu Controller Controls, Start-Up, Operation and Troubleshooting* manual.

Normal Cooling Mode — Humidi-MiZer® System with Single Stage Cooling

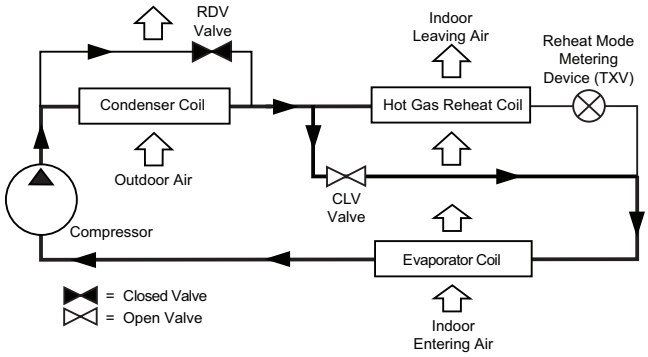

Normal Cooling Mode — Humidi-MiZer® System with 2-Stage Cooling

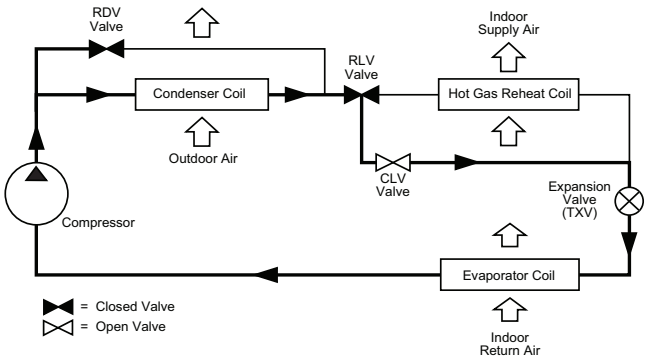

Subcooling Mode (Reheat1) — Humidi-MiZer System with Single Stage Cooling

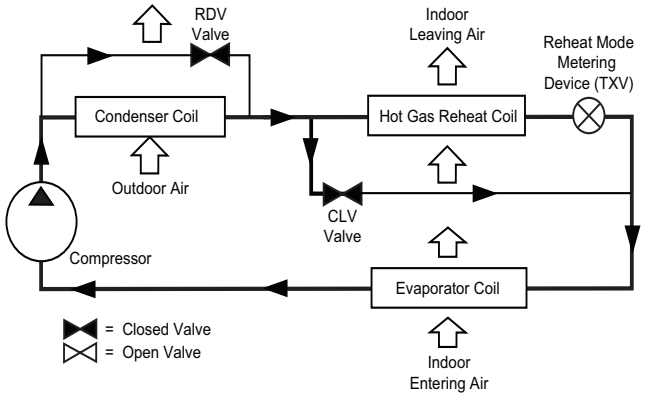

Subcooling Mode (Reheat1) — Humidi-MiZer System with 2-Stage Cooling

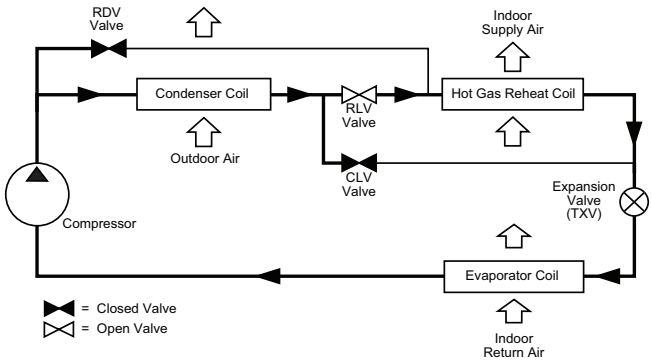

Hot Gas Reheat Mode (Reheat2) — Humidi-MiZer System with Single Stage Cooling

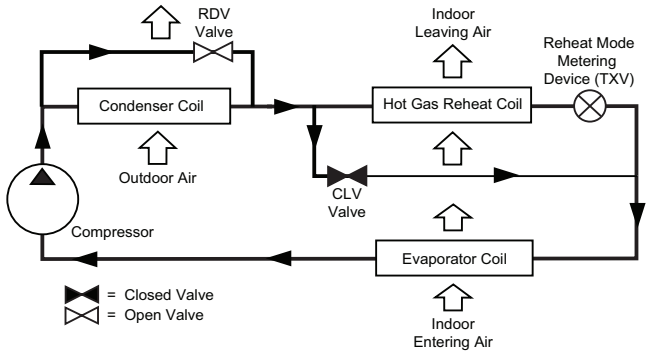

Hot Gas Reheat Mode (Reheat2) — Humidi-MiZer System with 2-Stage Cooling

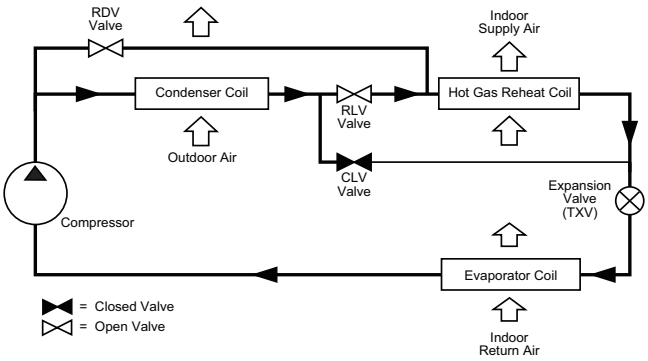

Minimum operating ambient temperature (cooling)

In mechanical cooling mode, your Carrier rooftop unit can safely operate down to an outdoor ambient temperature of 40°F (4°C). It is possible to provide cooling at lower outdoor ambient temperatures by using less outside air, economizers, and/or accessory low ambient kits.

Maximum operating ambient temperature (cooling)

The maximum operating ambient temperature for cooling mode is 115°F (46°C). While cooling operation above 115°F (46°C) may be possible, it could cause reduced performance, reduced reliability, or a protective action by the unit's internal safety devices.

Multiple motor and drive packages

Some applications need larger horsepower motors, some need more airflow, and some need both. Regardless of the case, your Carrier expert has a factory-installed combination to meet your application. A wide selection of motors are available, factory installed, to handle nearly any application.

Stainless steel heat exchanger (48FE units only)

For this option, the tubular heat exchanger is made out of a minimum 20 gauge type 409 stainless steel for applications where the mixed air to the heat exchanger is expected to drop below 45°F (7°C). Stainless steel may be specified on applications where the presence of airborne contaminants require its use (applications such as paper mills) or in area with very high outdoor humidity that may result in severe condensation in the heat exchanger during cooling operation.

Minimum mixed air temperature (heating) (48FE units only)

Using the factory settings, the minimum temperatures for mixed air (the combined temperature of the warm return air and the cold outdoor air) entering the dimpled gas heat exchangers are shown in the following table.

Minimum Temperature for Mixed Air Temperature

ALUMINIZED	STAINLESS STEEL
50°F (10°C) Continuous	40°F (4°C) Continuous
45°F (7°C) Intermittent	35°F (2°C) Intermittent

Operating at lower mixed-air temperatures may be possible, if a field-supplied outdoor-air thermostat initiates both heat stages when the temperature is less than the minimum temperatures listed above. Please contact your local Carrier representative for assistance.

Minimum and maximum airflow (heating and cooling)

To maintain safe and reliable operation of your rooftop, operate within the heating airflow limits during heating mode and cooling airflow limits during cooling mode. Operating above the maximum may cause blow-off, undesired airflow noise, or airflow-related problems with the rooftop unit. Operating below the minimum may cause problems with coil freeze-up and unsafe heating operation. Heating and cooling limitations differ when evaluating operating cfm. The minimum value is the HIGHER of the cooling and heating minimum cfm values published on page 9 and the maximum value is the LOWER of the cooling and heating minimum values published on page 10.

Heating-to-cooling changeover

Your unit will automatically change from heating to cooling mode when using a thermostat with an auto-changeover feature.

Airflow

All units are draw-though in cooling mode and blow-through in heating mode.

Outdoor air application strategies

Economizers reduce operating expenses and compressor run time by providing a free source of cooling and a means of ventilation to match changing needs. In fact, they should be considered for most applications. Also, consider the various economizer control methods and their benefits, as well as the sensors required to accomplish your application goals. Please contact your local Carrier representative for assistance.

Motor limits, brake horsepower (bhp)

Due to the internal design of Carrier units, the air path, and specially designed motors, the full horsepower (maximum continuous bhp) band, as listed in the Fan Performance tables, can be used with the utmost confidence. There is no need for extra safety factors, as Carrier motors are designed and rigorously tested to use the entire listed bhp range without either nuisance tripping or premature motor failure.

Propane heating (48FE units only)

Propane has different physical qualities than natural gas. As a result, propane requires a different fuel to air mixture. To optimize the fuel/air mixture for propane, Carrier sells different burner orifices in an easy-to-install accessory kit. To select the correct burner orifices or determine the heat capacity for a propane application, use either the selection software or the unit's service manual.

NOTE: Not available for 48FE Ultra Low NOx units.

High altitude heating

High altitudes have less oxygen, which affects the fuel/air mixture in heat exchangers. In order to maintain a proper fuel/air mixture, heat exchangers operating at altitudes above 2000 ft (610 m) require different orifices. To select the correct burner orifices or determine the heat capacity for a high altitude application, use either the selection software or the unit's service manual.

High altitudes have less oxygen, which means heat exchangers need less fuel. The new gas orifices in Carrier's field-installed kit make the necessary adjustment for high altitude applications. They restore the optimal fuel to air mixture and maintain healthy combustion at altitudes above 2000 ft (610 m).

NOTE: Typical natural gas heating value ranges from 975 to 1050 Btu/ft^3 at sea level nationally. The heating value goes down approximately 1.7% per every thousand feet of elevation. Standard factory orifices can typically be used up

to 2000 ft (610 m) elevation without any operational issues.

NOTE: Ultra Low NOx units can operate at altitudes of 0 to 2,000 feet standard. Operation above 2,000 feet is not allowed.

Sizing a rooftop

Bigger is not necessarily better — while an air conditioner needs to have enough capacity to meet the design loads, it does not need excess capacity. In fact, excess capacity typically results in very poor part load performance and humidity control.

Using higher design temperatures than ASHRAE recommends for your location and adding "safety factors" to the calculated load are both signs of oversizing. Oversizing an air conditioner leads to poor humidity control, reduced efficiency, higher utility bills, larger indoor temperature swings, excessive noise, and increased wear and tear on the air conditioner.

Rather than oversizing an air conditioner, engineers should "right-size" or even slightly "under-size" air conditioners. Correctly sizing an air conditioner controls humidity better, promotes efficiency, reduces utility bills, extends equipment life, and maintains even, comfortable temperatures. Please contact your local Carrier representative for assistance.

Low ambient applications

The optional Carrier economizer can adequately cool your space by bringing in fresh, cool outside air. In fact, when a unit is equipped with an economizer, an accessory low-ambient kit may not be necessary. In low ambient conditions, unless the outdoor air is excessively humid or contaminated, economizer-based "free cooling" is the preferred, less costly, and energy-conscious method. In low ambient applications where outside air might not be desired (such as contaminated or excessively humid outdoor environments), your Carrier rooftop can operate to ambient temperatures down to –20°F (–29°C) using the recommended accessory low ambient controller.

Note about this specification:
This specification is in the "Masterformat" as published by the Construction Specification Institute. Please feel free to copy this specification directly into your building spec.

Gas Heat/Electric Cooling Packaged Rooftop

HVAC Guide Specifications

Size Range: **3 to 6 Nominal Tons**

Carrier Model Number: **48FE*04-07**

Part 1 — (23 06 80) Schedules for Decentralized HVAC Equipment

1.01 (23 06 80.13) Decentralized Unitary HVAC Equipment Schedule

A. (23 06 80.13.A.) Rooftop Unit (RTU) Schedule:

Schedule is per the project specification requirements.

Part 2 — (23 07 16) HVAC Equipment Insulation

2.01 (23 07 16.13) Decentralized, Rooftop Units:

A. (23 07 16.13.A.) Evaporator Fan Compartment:

1. Interior cabinet surfaces shall be insulated with a minimum 1/2 in. thick, minimum 1-1/2 lb density, flexible fiberglass insulation bonded with a phenolic binder, neoprene coated on the air side.
2. Insulation and adhesive shall meet NFPA 90A requirements for flame spread and smoke generation.

B. (23 07 16.13.B.) Gas Heat Compartment:

1. Aluminum foil-faced fiberglass insulation shall be used.
2. Insulation and adhesive shall meet NFPA 90A requirements for flame spread and smoke generation.

Part 3 — (23 09 13) Instrumentation and Control Devices for HVAC

3.01 (23 09 13.23) Sensors and Transmitters

A. (23 09 13.23.A.) Thermostats:

1. Thermostat must:
   a. energize both "W" and "G" when calling for heat.
   b. have capability to energize 1 or 2 stages of cooling, and 2 different stages of heating.
   c. include capability for occupancy scheduling.

Part 4 — (23 09 23) Direct Digital Control System for HVAC

4.01 (23 09 23.13) Decentralized, Rooftop Units:

A. (23 09 23.13.A.) SystemVu™ intelligent integrated Direct Digital Control (DDC) shall provide:

1. Integrated unit operation for comfort cooling, heating ventilation as well as all monitoring, recording and reporting capabilities. Controller shall also provide diagnostics and alarms of abnormal unit operation through the controller. Controller shall have an intuitive user display and be able to be used in a standalone operation or via building automation system (BAS).
2. Quick Unit Status LEDs of: Run — meaning all systems are go, ALERT — that indicates there is currently a non-critical issue with the unit, like filters need to be replaced and FAULT — that indicates the unit has a critical issue and will possibly shut down.
3. Six large navigation keys for easy access. Navigation keys shall consist of: TEST, BACK, ENTER, and MENU along with UP and DOWN arrows.
4. Full back lit user display with 4 line by 30 character text capabilities. Display menu shall be designed to provide guided major menus and sub menus main menus provided below:
   a. Shutdown Unit
   b. Run Status
   c. Settings
   d. Alerts/Faults
   e. Service
   f. Inputs
   g. Outputs
   h. USB
5. The capability for standalone operation with conventional thermostat/sensor or use with building automation systems (BAS) of Carrier i-Vu®, BACnet™[1], and Carrier Comfort Network® (CCN) systems. No special modules or boards are required for these capabilities. Has the capability to work with Equipment Touch™ and System Touch™ devices and ZS Sensors.
6. The ability to read refrigerant pressures at display or via BAS network of; Discharge Pressure and Suction Pressure. The need for traditional refrigerant gauges is not required.
7. USB Data Port for flash drive interaction. This will allow the transfer of data for uploads, downloads, perform software upgrades, back-up and restore data and file transfer data such as component number of starts and run hours.

1. Third-party trademarks and logos are the property of their respective owners.

8. Reverse Rotation Protection of compressors if field 3-phase wiring is misapplied.
9. Provide Service Capabilities of:
   a. Auto run test
   b. Manual run test
   c. Component run hours and starts
   d. Commissioning reports
   e. Data logging
   f. Alarm history
10. Economizer control and diagnostics. Set up economizer operation, receive feedback from actuator. Also meets the most recent California Title 24, ASHRAE 90.1 and IECC®[1] Fault Detection and Diagnostic (FDD) requirements.
11. Unit cooling operation down to 40°F (4°C).
12. Controller shall have easy access connections around the controller perimeter area and consist of Mate-N-Lok®[1], terminal block and RJ style modular jack connections.
13. 365 day real time clock, 20 holiday schedules along with occupied and unoccupied scheduling.
14. Auto-recognition for easy installation and commissioning of devices like economizers, space sensors etc.
15. A 5°F (3°C) temperature difference between cooling and heating setpoints to meet the latest ASHRAE 90.1 Energy Standard.
16. Contain return air sensor, supply air sensor and outdoor air sensor to help monitor and provide data for the unit comfort operation, diagnostic and alarms.
17. Use of Carrier's field accessory Equipment Touch and System Touch devices.
18. Units with the factory-installed Humidi-MiZer® system option are capable of providing multiple modes of improved dehumidification as a variation of the normal cooling cycle.
19. Supply Air Tempering control operates the gas or electric heat to maintain a minimum supply air temperature during conditions where very cold outdoor air causes the supply air temperature to fall below the configured Supply Air Tempering Setpoint. This occurs during periods where DCV is active and increasing the amount of outdoor air or in cases where the system is operating at very low airflow and the calculated economizer position has increased to maintain a constant ventilation rate.
20. Demand limiting in SystemVu™ is achieved through setpoint expansion. The systems heating and cooling setpoints are expanded in steps or levels. The degree to which the setpoints may be expanded is defined by the 6 demand level offsets and the 2 commanded demand limit levels.
21. 3-year limited part warranty.

Part 5 — (23 09 33) Electric and Electronic Control System for HVAC

5.01 (23 09 33.13) Decentralized, Rooftop Units:

A. (23 09 33.13.A.) General:
   1. Shall be complete with self-contained low-voltage control circuit protected by a resettable circuit breaker on the 24-v transformer side. Transformer shall have 75 VA capability.
   2. Shall utilize color-coded wiring.
   3. Shall include a Unit Control Board to conveniently and safely provide connection points for vital control functions such as: smoke detectors, phase monitor, gas controller, economizer, thermostat, DDC control options, and low and high pressure switches. Controller shall also provide an intuitive means to adjust the indoor fan speed through a simple switch and pot adjustment design.
   4. The heat exchanger shall be controlled by an integrated gas controller (IGC) microprocessor. See heat exchanger section of this specification.
   5. Unit shall include a minimum of one 8-pin screw terminal connection board for connection of control wiring.

B. (23 09 33.13.B.) Safeties:
   1. Compressor over-temperature, over-current. High internal pressure differential.
   2. Low Pressure Switch:

      Low pressure switch shall use different color wire than the high pressure switch. The purpose is to assist the installer and service technician to correctly wire and or troubleshoot the rooftop unit.
   3. High Pressure Switch:

      High pressure switch shall use different color wire than the low pressure switch. The purpose is to assist the installer and service technician to correctly wire and or troubleshoot the rooftop unit.
   4. Automatic reset, motor thermal overload protector.
   5. Heating section shall be provided with the following minimum protections:
      a. High temperature limit switches.
      b. Induced draft motor pressure switch.
      c. Flame rollout switch.
      d. Flame proving controls.

1. Third-party trademarks and logos are the property of their respective owners.

6. A2L Refrigerant Leak Dissipation System (Electromechanical):
   a. Leak dissipation system shall consist of control board and A2L sensor certified to UL-60335-2-40.
   b. System shall be designed for the life of the unit.
   c. Dissipation system shall be automatic, ship pre-wired, and require no additional field connections to thermostat to function.
   d. Refrigerant leak sensor shall be installed in UL-certified location and orientation. Sensor shall be self-correcting and resettable. Single use refrigerant leak sensor shall not be permitted.
   e. Factory-installed dissipation controller shall use onboard microprocessor and include:
      1) Automatic reset after a dissipation event has occurred.
      2) Onboard LED with flash code to indicate current unit status and hardware failures.
      3) Depressible "Test" button to allow for a system test and recall/reset of leak detection history.
      4) 24-v dry contact alarm terminal to allow for external notification of leak detection.
   f. Dissipation control board shall be accessible via normal maintenance locations and LED shall be visible.
   g. Dissipation system shall "Fail Safe" per UL requirements.
   h. Dissipation shall allow smoke and building fire systems to override in case of event.
7. A2L Refrigerant Leak Dissipation System (SystemVu):
   a. Leak dissipation system shall consist of control board and A2L sensor certified to UL-60335-2-40, integrated with SystemVu controller.
   b. System shall be designed for the life of the unit.
   c. Dissipation system shall be automatic, ship pre-wired, and require no additional field connections to function.
   d. Refrigerant leak sensor shall be installed in UL-certified location and orientation. Sensor shall be self-correcting and resettable. Single use refrigerant leak sensor shall not be permitted.
   e. Factory-installed dissipation system shall use onboard microprocessor and include:
      1) Automatic leak detection and dissipation algorithm.
      2) Automatic reset after a dissipation event has occurred.
      3) Onboard LED with flash code to indicate current unit status and hardware failures.
      4) Depressible "Test" button to allow for a system test and recall/reset of leak detection history.
      5) 24-v dry contact alarm terminal on dissipation control board to allow for external notification of leak detection.
      6) Ability to notify BAS system of dissipation event via readable alarm point through SystemVu.
      7) Recallable dissipation alarm history on SystemVu controller.
   f. Dissipation control board shall be accessible via normal maintenance locations and LED shall be visible.
   g. Dissipation system shall "Fail Safe" per UL requirements.
   h. Dissipation shall allow smoke and building fire systems to override in case of event.

Part 6 — (23 09 93) Sequence of Operations for HVAC Controls

6.01 (23 09 93.13) Decentralized, Rooftop Units:

A. (23 09 93.13.A.) INSERT SEQUENCE OF OPERATION

Part 7 — (23 40 13) Panel Air Filters

7.01 (23 40 13.13) Decentralized, Rooftop Units:

A. (23 40 13.13.A.) Standard Filter Section:
   1. Shall consist of factory installed, low velocity, disposable 2 in. thick fiberglass filters of commercially available sizes.
   2. Unit shall use only one filter size. Multiple sizes are not acceptable.
   3. Filters shall be accessible through an access panel with "no-tool" removal as described in the unit cabinet section of this specification (23 81 19.13.G).

Part 8 — (23 81 19) Self-Contained Air Conditioners

8.01 (23 81 19.13) Small-Capacity Self-Contained Air Conditioners:

A. (23 81 19.13.A.) General:
   1. Outdoor, rooftop mounted, electrically controlled, heating and cooling unit utilizing a fully hermetic scroll compressor(s) for cooling duty and gas combustion for heating duty.
   2. Factory assembled, single-piece heating and cooling rooftop unit. Contained within the unit enclosure shall be all factory wiring, piping, controls, and special features required prior to field start-up.
   3. Unit shall use Puron Advance™ (R-454B) refrigerant.
   4. Unit shall be installed in accordance with the manufacturer's instructions.

5. Unit must be selected and installed in compliance with local, state, and federal codes.

B. (23 81 19.13.B.) Quality Assurance:
1. Unit meets DOE and ASHRAE 90.1 minimum efficiency requirements.
2. Unit shall be rated in accordance with AHRI Standards 210/240 (04-06 sizes) or 340/360 (07 size).
3. Unit shall be designed to conform to ASHRAE 15.
4. Unit shall be UL-tested and certified in accordance with ANSI Z21.47 Standards and UL-listed and certified under Canadian standards as a total package for safety requirements.
5. Insulation and adhesive shall meet NFPA 90A requirements for flame spread and smoke generation.
6. Unit casing shall be capable of withstanding 500 hour salt spray exposure per ASTM B117 (scribed specimen).
7. Unit shall be designed in accordance with ISO 9001, and shall be manufactured in a facility registered by ISO 9001:2015.
8. Roof curb shall be designed to conform to NRCA Standards.
9. Unit shall be subjected to a completely automated run test on the assembly line. The data for each unit will be stored at the factory, and must be available upon request.
10. Unit shall be designed in accordance with UL Standards 60335-1 and 60335-2-40, including testing to withstand rain. Unit shall be IPX4 rated.
11. Unit shall be constructed to prevent intrusion of snow and tested to prevent snow intrusion into the control box up to 40 mph.
12. Unit shake tested to assurance level 1, ASTM D4169 to ensure shipping reliability.

C. (23 81 19.13.C.) Delivery, Storage, and Handling:
1. Unit shall be stored and handled per manufacturer's recommendations.
2. Lifted by crane requires either shipping top panel or spreader bars.
3. Unit shall only be stored or positioned in the upright position.

D. (23 81 19.13.D.) Project Conditions:
1. As specified in the contract.

E. (23 81 19.13.E.) Operating Characteristics:
1. Unit shall be capable of starting and running at 115°F (46°C) ambient outdoor temperature, meeting maximum load criteria of AHRI Standard 210/240 or 340/360 at ±10% voltage.
2. Compressor with standard controls shall be capable of operation down to 40°F (4°C), ambient outdoor temperatures.
3. Unit shall discharge supply air vertically or horizontally as shown on contract drawings.
4. Unit shall be factory configured for vertical supply and return configurations.
5. Unit shall be field convertible from vertical to horizontal airflow on all models. No special kit required.
6. Unit shall be capable of mixed operation: vertical supply with horizontal return or horizontal supply with vertical return.

F. (23 81 19.13.F.) Electrical Requirements:
1. Main power supply voltage, phase, and frequency must match those required by the manufacturer.

G. (23 81 19.13.G.) Unit Cabinet:
1. Unit cabinet shall be constructed of galvanized steel, and shall be bonderized and coated with a prepainted baked enamel finish on all externally exposed surfaces.
2. Unit cabinet exterior paint shall be: film thickness, (dry) 0.003 inches minimum, gloss (per ASTM D523, 60°F/16°C): 60, Hardness: H-2H Pencil hardness.
3. Evaporator fan compartment interior cabinet insulation shall conform to AHRI Standards 210/240 and or 340/360 minimum exterior sweat criteria. Interior surfaces shall be insulated with a minimum 1/2 in. thick, 1 lb density, flexible fiberglass insulation, neoprene coated on the air side. Aluminum foil-faced fiberglass insulation shall be used in the heat compartment.
4. Base of unit shall have a minimum of 4 locations for thru-the-base gas and electrical connections (factory-installed or field-installed), standard.
5. Base Rail:
   a. Unit shall have base rails on a minimum of 2 sides.
   b. Holes shall be provided in the base rails for rigging shackles to facilitate maneuvering and overhead rigging.
   c. Holes shall be provided in the base rail for moving the rooftop by fork truck.
   d. Base rail shall be a minimum of 16 gauge thickness.
6. Condensate Pan and Connections:
   a. Shall be a sloped condensate drain pan made of a corrosion resistant material.
   b. Shall comply with ASHRAE Standard 62.
   c. Shall use a 3/4 in. 14 NPT drain connection, possible either through the bottom or

side of the drain pan. Connection shall be made per manufacturer's recommendations.

7. Top Panel:
   a. Shall be a single piece top panel on all sizes.
8. Gas Connections:
   a. All gas piping connecting to unit gas valve shall enter the unit cabinet at a single location on side of unit (horizontal plane).
   b. Thru-the-base capability:
      1) Standard unit shall have a thru-the-base gas-line location using a raised, embossed portion of the unit basepan.
      2) Optional, factory approved, water-tight connection method must be used for thru-the-base gas connections.
      3) No basepan penetration, other than those authorized by the manufacturer, is permitted.
9. Electrical Connections:
   a. All unit power wiring shall enter unit cabinet at a single, factory prepared, knockout location.
   b. Thru-the-base capability:
      1) Standard unit shall have a thru-the-base electrical location(s) using a raised, embossed portion of the unit basepan.
      2) Optional, factory approved, water-tight connection method must be used for thru-the-base electrical connections.
      3) No basepan penetration, other than those authorized by the manufacturer, is permitted.
10. Component Access Panels (standard):
   a. Cabinet panels shall be easily removable for servicing.
   b. Unit shall have one factory installed, toolless, removable, filter access panel.
   c. Panels covering control box, indoor fan, indoor fan motor, gas components (where applicable), and compressors shall have molded composite handles.
   d. Handles shall be UV modified, composite. They shall be permanently attached, and recessed into the panel.
   e. Screws on the vertical portion of all removable access panel shall engage into heat resistant, molded composite collars.
   f. Collars shall be removable and easily replaceable using manufacturer recommended parts.

H. (23 81 19.13.H.) Gas Heat:
1. General:
   a. Heat exchanger shall be an induced draft design. Positive pressure heat exchanger designs shall not be allowed.
   b. Shall incorporate a direct-spark ignition system and redundant main gas valve.
   c. Gas supply pressure at the inlet to the rooftop unit gas valve must match that required by the manufacturer.
2. The heat exchanger shall be controlled by an integrated gas controller (IGC) microprocessor.
   a. IGC board shall notify users of fault using an LED (light-emitting diode).
   b. The LED shall be visible without removing the control box access panel.
   c. IGC board shall contain algorithms that modify evaporator fan operation to prevent future cycling on high temperature limit switch.
   d. Unit shall be equipped with anti-cycle protection with one short cycle on unit flame rollout switch or 4 continuous short cycles on the high temperature limit switch. Fault indication shall be made using an LED.
3. Standard Heat Exchanger Construction:
   a. Heat exchanger shall be of the tubular-section type constructed of a minimum of 20-gauge steel coated with a nominal 1.2 mil aluminum-silicone alloy for corrosion resistance.
   b. Burners shall be of the in-shot type constructed of aluminum-coated steel.
   c. Burners shall incorporate orifices for rated heat output up to 2000 ft (610 m) elevation. Additional accessory kits may be required for applications above 2000 ft (610 m) elevation, depending on local gas supply conditions.
   d. Each heat exchanger tube shall contain multiple dimples for increased heating effectiveness.
4. Optional Stainless Steel Heat Exchanger Construction:
   a. Use energy saving, direct-spark ignition system.
   b. Use a redundant main gas valve.
   c. Burners shall be of the in-shot type constructed of aluminum-coated steel.
   d. All gas piping shall enter the unit cabinet at a single location on side of unit (horizontal plane).
   e. The optional stainless steel heat exchanger shall be of the tubular-section type, constructed of a minimum of 20-gauge type 409 stainless steel.
   f. Type 409 stainless steel shall be used in heat exchanger tubes and vestibule plate.
   g. Complete stainless steel heat exchanger allows for greater application flexibility.

5. Optional Low NOx Heat Exchanger Construction:
   a. Low NOx reduction shall be provided to reduce nitrous oxide emissions to be 40 nanograms per joule or less.
   b. Primary tubes and vestibule plates on low NOx units shall be 409 stainless steel. Other components shall be aluminized steel.
6. Standard Stainless Steel Heat Exchanger Construction — Ultra Low NOx Burner Box:
   a. Burners shall be of the premixed type constructed of stainless steel.
   b. Shall use a redundant main gas valve.
   c. Burners shall be of the in-shot type constructed of aluminum-coated steel.
   d. All gas piping shall enter the unit cabinet at a single location on side of unit (horizontal plane).
   e. The stainless steel heat exchanger shall be of the tubular-section type, constructed of a minimum of 20-gauge type 409 stainless steel.
   f. Type 409 stainless steel shall be used in heat exchanger tubes and vestibule plate.
   g. Stainless Steel natural gas burner box and heat exchanger assembly shall provide Ultra Low NOx gas emissions of 14 nanograms/joule (ng/j).
7. Induced Draft Combustion Motor and Blower:
   a. Shall be a direct-drive, single inlet, forward-curved centrifugal type.
   b. Shall be made from steel with a corrosion resistant finish.
   c. Shall have permanently lubricated sealed bearings.
   d. Shall have inherent thermal overload protection.
   e. Shall have an automatic reset feature.

I. (23 81 19.13.I.) Coils:
1. Standard Aluminum Fin-Copper Tube Coils:
   a. Standard evaporator and condenser coils shall have aluminum lanced plate fins mechanically bonded to seamless internal helically grooved copper tubes with all joints brazed.
   b. Evaporator coils shall be leak tested to 150 psig, pressure tested to 450 psig, and qualified to UL 60335-2-40 burst test at 1775 psig.
   c. Condenser coils shall be leak tested to 150 psig, pressure tested to 650 psig, and qualified to UL 60335-2-40 burst test at 1980 psig.
2. Optional Pre-coated Aluminum-Fin Condenser Coils (3-Phase Models Only):
   a. Shall have a durable epoxy-phenolic coating to provide protection in mildly corrosive coastal environments.
   b. Coating shall be applied to the aluminum fin stock prior to the fin stamping process to create an inert barrier between the aluminum fin and copper tube.
   c. Epoxy-phenolic barrier shall minimize galvanic action between dissimilar metals.
   d. Corrosion durability of fin stock shall be confirmed through testing to be no less than 1000 hours salt spray per ASTM B117.
   e. Corrosion durability of fin stock shall be confirmed through testing to have no visible corrosion after 48 hour immersion in a room temperature solution of 5% salt, 1% acetic acid.
   f. Fin stock coating shall pass 2000 hours of the following: one week exposure in the prohesion chamber followed by one week of accelerated ultraviolet light testing. Prohesion chamber: the solution shall contain 3.5% sodium chloride and 0.35% ammonium sulfate. The exposure cycle is one hour of salt fog application at ambient followed by one hour drying at 95°F (35°C).
3. Optional Copper-Fin Evaporator and Condenser Coils (3-Phase Models Only):
   a. Shall be constructed of copper fins mechanically bonded to copper tubes and copper tube sheets.
   b. Galvanized steel tube sheets shall not be acceptable.
   c. A polymer strip shall prevent coil assembly from contacting the sheet metal coil pan to minimize potential for galvanic corrosion between coil and pan.
4. Optional E-coated Aluminum-Fin Evaporator and Condenser Coils (3-Phase Models Only):
   a. Shall have a flexible epoxy polymer coating uniformly applied to all coil surface areas without material bridging between fins.
   b. Coating process shall ensure complete coil encapsulation of tubes, fins and headers.
   c. Color shall be high gloss black with gloss per ASTM D523.
   d. Uniform dry film thickness from 0.8 to 1.2 mil on all surface areas including fin edges.
   e. Superior hardness characteristics of 2H per ASTM D3363 and cross-hatch adhesion of 4B-5B per ASTM D3359.
   f. Impact resistance shall be up to 160 in. lb (ASTM D2794).

g. Humidity and water immersion resistance shall be up to minimum 1000 and 250 hours respectively (ASTM D2247 and ASTM D870).

h. Corrosion durability shall be confirmed through testing to be no less than 1000 hours salt spray per ASTM B117.

J. (23 81 19.13.J.) Refrigerant Components:

1. Refrigerant circuit shall include the following control, safety, and maintenance features:

a. Fixed orifice metering system on 04-06 models and TXV on 07 size models shall include a multiple feed distribution system that optimizes coil performance.

b. Refrigerant filter drier, solid core design with pre and post-filter service gauge connections for filter diagnostics and maintenance.

c. Service gauge connections on suction and discharge lines.

d. Pressure gauge access through a specially designed access port in the top panel of the unit.

2. There shall be gauge line access port in the skin of the rooftop, covered by a black, removable plug.

a. The plug shall be easy to remove and replace.

b. When the plug is removed, the gauge access port shall enable maintenance personnel to route their pressure gauge lines.

c. This gauge access port shall facilitate correct and accurate condenser pressure readings by enabling the reading with the compressor access panel on.

d. The plug shall be made of a leak proof, UV-resistant, composite material.

3. Compressors:

a. Unit shall use fully hermetic scroll compressors.

b. Compressor motors shall be cooled by refrigerant gas passing through motor windings.

c. Compressors shall be internally protected from high discharge temperature conditions.

d. Compressors shall be protected from an over-temperature and over-amperage conditions by an internal, motor overload device.

e. Compressor shall be factory mounted on rubber grommets.

f. Compressor motors shall have internal line break thermal, current overload and high pressure differential protection.

g. Crankcase heaters shall not be required for normal operating range, unless required by compressor manufacturer due to refrigerant charge limits.

h. Compressor on 04-06 models shall be of a single stage cooling capacity design and 07 models shall be a 2 stage cooling capacity design.

K. (23 81 19.13.K.) Filter Section:

1. Filters access is specified in the unit cabinet section of this specification.

2. Filters shall be held in place by a pivoting filter tray, facilitating easy removal and installation.

3. Shall consist of factory installed, low velocity, throw-away 2 in. thick fiberglass filters.

4. Filters shall be standard, commercially available sizes.

5. Only one size filter per unit is allowed.

L. (23 81 19.13.L.) Evaporator Fan and Motor with EcoBlue™ Technology:

1. Direct Drive Evaporator fan motor:

a. Shall be an ECM motor design.

b. Shall be direct drive design for all static options.

c. Shall have permanently lubricated bearings.

d. Shall have inherent automatic-reset thermal overload protection.

e. Shall have slow ramp-up to speed capabilities.

f. Shall require no fan/motor belts for operation, adjustments and or initial fan speed setup.

g. Fan DC voltage set up on Unit Control Board shall eliminate the need of removal of blower access door, required on conventional belt drive systems.

h. Shall be internally protected from electrical phase reversal.

2. Evaporator Fan:

a. Speed shall be easily set with dedicated selection switch and adjustment pot on unit control board or through SystemVu™ controller.

b. On sizes 04-06 single speed indoor fan operation provided and on 07 size model with 2 stage cooling capacity control, the indoor fan speed is automatically controlled to meet the code-compliant 66% low fan speed and 100% at full fan speed operation.

c. Blower fan shall be a vane axial fan design with fan assembly secured directly to ECM motor. Additional shafts, belts, pulleys/sheaves, and bearing blocks to drive fan shall not be permitted or necessary.

d. Additional variable frequency drive to control fan motor speed shall not be permitted or necessary. All speed control electronics must be on board fan motor assembly.

e. Shall be constructed of a cast aluminum stator and high impact composite material on rotor and air inlet casing.

f. Shall be a patented / pending design with a corrosion resistant material.

g. Fan assembly design shall be integrated into fan deck, dynamically balanced, and require no additional vibration isolation for normal operation.

h. Shall have slow ramp-up to speed capabilities to help reduce sound and comfort issues typically associated with single speed belt drive systems.

i. Shall be a slide out design with 2 screw removal.

3. Shall include an easily accessible Unit Control Board to conveniently and safely provide connection points for vital control functions such as: smoke detectors, phase monitor, gas controller, economizer, thermostat, DDC control options, and low and high pressure switches. Controller shall also provide an intuitive means to adjust the indoor fan speed through a simple switch and pot adjustment design.

M. (23 81 19.13.M.) Condenser Fans and Motors:

1. Condenser Fan Motors:

a. Shall be a totally enclosed motor.

b. Shall use permanently lubricated bearings.

c. Shall have inherent thermal overload protection with an automatic reset feature.

d. Shall use a shaft-down design on all sizes.

2. Condenser Fans:

a. Shall be a direct-driven propeller type fan constructed of high impact composite material.

b. Shall have high impact composite blades completely formed into one piece without blade fasteners or connectors and shall be dynamically balanced.

N. (23 81 19.13.N.) Special Features Options and Accessories:

1. Integrated EconomizerONE and EconoMi$er2 Low Leak Rate Models.

a. Integrated, gear driven opposing modulating blade design type capable of simultaneous economizer and compressor operation.

b. Independent modules for vertical or horizontal return configuration shall be available. Vertical return modules shall be available as a factory-installed option.

c. Damper blades shall be galvanized steel with composite gears. Plastic or composite blades on intake or return shall not be acceptable.

d. Shall include all hardware and controls to provide free cooling with outdoor air when temperature and/or humidity are below setpoints.

e. Shall be equipped with gear driven dampers for both the outdoor ventilation air and the return air for positive air stream control.

f. Low leak rate shall be equipped with dampers not to exceed 2% leakage at 1 in. wg pressure differential.

g. Economizer controller on EconomizerONE models shall be the Siemens POL224 that provides:

1) Combined minimum and DCV maximum damper position potentiometers with compressor staging relay.

2) Optional configuration via WLAN stick and Siemens Climatix™[1] smartphone app for easy setup.

3) Functions with solid-state analog enthalpy or dry bulb changeover control sensing.

4) LED indication for free cooling, sensor, and damper operation.

5) One-line LCD interface screen for setup, configuration, and troubleshooting.

6) On-board Fault Detection and Diagnostics (FDD) that senses and alerts when the economizer is not operating properly, per California Title 24, ASHRAE 90.1 and IECC.

7) Sensor failure loss of communication identification.

8) Capabilities for use with multiple-speed or single speed indoor fan systems.

9) Digital sensors: dry bulb and enthalpy.

h. Economizer controller on EconoMi$er 2 models with SystemVu™ controllers shall be a 4 to 20mA design controlled directly by the controller. SystemVu controllers meet California Title 24, ASHRAE 90.1 and IECC Fault Detection and Diagnostic (FDD) requirements.

i. Shall be capable of introducing up to 100% outdoor air.

j. Shall be equipped with a barometric relief damper capable of relieving up to 100% return air and contain seals that meet ASHRAE 90.1 requirements.

k. Shall be designed to close damper(s) during loss-of-power situations with spring return built into motor.

l. Dry bulb outdoor air temperature sensor shall be provided as standard. Enthalpy sensor is also available factory installed only. Outdoor air sensor setpoint shall be adjustable and

1. Third-party trademarks and logos are the property of their respective owners.

shall range from 40°F to 100°F (4°C to 38°C). Additional sensor options shall be available as accessories.

m. The economizer controller shall also provide control of an accessory power exhaust unit function. Factory set at 100%, with a range of 0% to 100%.

n. The economizer shall maintain minimum airflow into the building during occupied period and provide design ventilation rate for full occupancy.

o. Dampers shall be completely closed when the unit is in the unoccupied mode.

p. Economizer controller shall accept a 0 to 10 vdc CO_2 sensor input for IAQ/DCV control. In this mode, dampers shall modulate the outdoor air damper to provide ventilation based on the sensor input.

q. Compressor lockout temperature on POL224 control is adjustable from –45°F to 80°F (–43°C to 26°C), set at a factory default of 32°F (0°C).

r. Actuator shall be direct coupled to economizer gear. No linkage arms or control rods shall be acceptable.

s. Contains LED indication for free cooling, sensor, and damper operations.

2. Integrated EconomizerONE and EconoMi$er®2 Ultra Low Leak Rate Models.

a. Integrated, gear driven opposing modulating blade design type capable of simultaneous economizer and compressor operation.

b. Independent modules for vertical or horizontal return configuration shall be available. Vertical return modules shall be available as a factory-installed option.

c. Damper blades shall be galvanized steel with composite gears. Plastic or composite blades on intake or return shall not be acceptable.

d. Shall include all hardware and controls to provide free cooling with outdoor air when temperature and/or humidity are below setpoints.

e. Shall be equipped with gear driven dampers for both the outdoor ventilation air and the return air for positive air stream control.

f. Ultra Low Leak design meets California Title 24 section 140.4 and ASHRAE 90.1 requirements for 4 cfm per sq ft on the outside air dampers and 10 cfm per sq ft on the return dampers.

g. Economizer controller on EconomizerONE models shall be the Siemens POL224 that provides:

1) One-line LCD interface screen for setup, configuration, and troubleshooting.

2) Optional configuration via WLAN stick and Siemens Climatix™[1] smartphone app for easy setup.

3) On-board Fault Detection and Diagnostics (FDD) that senses and alerts when the economizer is not operating properly, per California Title 24, ASHRAE 90.1 and IECC.

4) Sensor failure loss of communication identification.

5) Capabilities for use with multiple-speed indoor fan systems.

6) Digital sensors: dry bulb and enthalpy.

h. Economizer controller on EconoMi$er 2 models with SystemVu™ controllers shall be a 4 to 20 mA design controlled directly by the controller. SystemVu controllers meet California Title 24, ASHRAE 90.1 and IECC Fault Detection and Diagnostic (FDD) requirements.

i. Shall be capable of introducing up to 100% outdoor air.

j. Shall be equipped with a barometric relief damper capable of relieving up to 100% return air and contain seals that meet ASHRAE 90.1 requirements.

k. Shall be designed to close damper(s) during loss-of-power situations with spring return built into motor.

l. Dry bulb outdoor air temperature sensor shall be provided as standard. Enthalpy sensor is also available factory installed only. Outdoor air sensor setpoint shall be adjustable and shall range from 40°F to 100°F (4°C to 38°C). Additional sensor options shall be available as accessories.

m. The economizer controller shall also provide control of an accessory power exhaust unit function. Factory set at 100%, with a range of 0% to 100%.

n. The economizer shall maintain minimum airflow into the building during occupied period and provide design ventilation rate for full occupancy.

o. Dampers shall be completely closed when the unit is in the unoccupied mode.

p. Economizer controller shall accept a 0 to 10 vdc CO_2 sensor input for IAQ/DCV control. In this mode, dampers shall modulate the outdoor air damper to provide ventilation based on the sensor input.

q. Compressor lockout temperature on POL224 control is adjustable from –45°F to 80°F (–43°C to 26°C), set at a factory default of 32°F (0°C).

1. Third-party trademarks and logos are the property of their respective owners.

r. Actuator shall be direct coupled to economizer gear. No linkage arms or control rods shall be acceptable.

s. Contains LED indication for free cooling, sensor, and damper operation.

3. Wi-Fi/WLAN Stick for EconomizerONE POL224 (field-installed):

   This item allows for the use of the Siemens Climatix™ mobile application.

4. Two-Position Damper (Field-installed only):

   a. Damper shall be a Two-Position Damper. Damper travel shall be from the full closed position to the field adjustable %-open setpoint.

   b. Damper shall include adjustable damper travel from 25% to 100% (full open).

   c. Damper shall include single or dual blade, gear driven dampers and actuator motor.

   d. Actuator shall be direct coupled to damper gear. No linkage arms or control rods shall be acceptable.

   e. Damper will admit up to 100% outdoor air for applicable rooftop units.

   f. Damper shall close upon indoor (evaporator) fan shutoff and/or loss of power.

   g. The damper actuator shall plug into the rooftop unit's wiring harness plug. No hard wiring shall be required.

   h. Outside air hood shall include aluminum water entrainment filter.

5. Manual Damper (Field-installed only):

   Manual damper package shall consist of damper, air inlet screen, and rain hood which can be preset to admit up to 25 or 50% outdoor air for year round ventilation.

6. Humidi-MiZer® Adaptive Dehumidification System (3-Phase Models Only):

   The Humidi-MiZer Adaptive Dehumidification System shall be factory installed and shall provide greater dehumidification of the occupied space by 2 modes of dehumidification operations in addition to its normal design cooling mode:

   a. Subcooling mode further sub cools the hot liquid refrigerant leaving the condenser coil when both temperature and humidity in the space are not satisfied.

   b. Hot gas reheat mode shall mix a portion of the hot gas from the discharge of the compressor with the hot liquid refrigerant leaving the condenser coil to create a 2-phase heat transfer in the system, resulting in a neutral leaving air temperature when only humidity in the space is not satisfied.

   c. Includes low ambient controller.

7. Low Ambient Control Package:

   a. Controller shall control coil head pressure by condenser fan speed modulation or condenser fan cycling and wind baffles.

   b. Shall consist of solid-state control and condenser coil temperature sensor to maintain condensing temperature between 90°F (32°C) and 110°F (43°C) at outdoor ambient temperatures down to –20°F (–29°C). For full low ambient control range, winter start kit is required.

8. Propane Conversion Kit (not available on Ultra Low NOx units):

   a. Package shall contain all the necessary hardware and instructions to convert a standard natural gas unit for use with liquefied propane, up to 2000 ft (610m) elevation.

   b. Additional accessory kits may be required for applications above 2000 ft (610m) elevation.

9. Flue Shield (not available on Ultra Low NOx units):

   Flue shield shall provide protection from the hot sides of the gas flue hood.

10. Condenser Coil Hail Guard Assembly (Factory-installed on 3-Phase Models Only. Field-installed on all 3 and 1-Phase Models.)

    a. Shall protect against damage from hail.

    b. Shall be either hood style or louvered.

11. Unit-Mounted, Non-Fused Disconnect Switch (Available on units with MOCPs of 80 amps or less):

    a. Switch shall be factory installed, internally mounted.

    b. National Electric Code (NEC) and UL approved non-fused switch shall provide unit power shutoff.

    c. Shall be accessible from outside the unit.

    d. Shall provide local shutdown and lockout capability.

    e. Sized only for the unit as ordered from the factory. Does not accommodate field-installed devices.

12. Convenience Outlet:

    a. Factory-Installed Powered Convenience Outlet (3-Phase Models Only):

       1) Outlet shall be powered from main line power to the rooftop unit.

       2) Outlet shall be powered from line side or load side of disconnect by installing contractor, as required by code. If outlet is powered from load side of disconnect, unit electrical ratings shall be UL certified and rated for additional outlet amperage.

3) Outlet shall be factory-installed and internally mounted with easily accessible 115-v female receptacle.
4) Outlet shall include 15 amp GFI receptacles with independent fuse protection.
5) Voltage required to operate convenience outlet shall be provided by a factory installed step-down transformer.
6) Outlet shall be accessible from outside the unit.
7) Outlet shall include a field installed "Wet in Use" cover.

b. Factory-Installed Non-Powered Convenience Outlet:
1) Outlet shall be powered from a separate 115/120-v power source.
2) A transformer shall not be included.
3) Outlet shall be factory-installed and internally mounted with easily accessible 115-v female receptacle.
4) Outlet shall include 15 amp GFI receptacles with independent fuse protection.
5) Outlet shall be accessible from outside the unit.
6) Outlet shall include a field installed "Wet in Use" cover.

c. Field-Installed Non-Powered Convenience Outlet:
1) Outlet shall be powered from a separate 115/120-v power source.
2) A transformer shall not be included.
3) Outlet shall be field-installed and internally mounted with easily accessible 115-v female receptacle.
4) Outlet shall include 20 amp GFI receptacles. This kit provides a flexible installation method which allows code compliance for height requirements of the GFCI outlet from the finished roof surface as well as the capability to relocate the outlet to a more convenient location.
5) Outlet shall be accessible from outside the unit.
6) Outlet shall include a field installed "Wet in Use" cover.

13. Flue Discharge Deflector:
a. Flue discharge deflector shall direct unit exhaust vertically instead of horizontally.
b. Deflector shall be defined as a "natural draft" device by the National Fuel and Gas (NFG) code.

14. Thru-the-Base Connectors:
a. Kits shall provide connectors to permit gas and electrical connections to be brought to the unit through the unit basepan.
b. Minimum of 4 connection locations per unit.

15. Propeller Power Exhaust:
a. Power exhaust shall be used in conjunction with an integrated economizer.
b. Independent modules for vertical or horizontal return configurations shall be available.
c. Horizontal power exhaust shall be mounted in return ductwork.
d. Power exhaust shall be controlled by economizer controller operation. Exhaust fans shall be energized when dampers open past the 0 to 100% adjustable setpoint on the economizer control.

16. Roof Curbs (Vertical):
a. Full perimeter roof curb with exhaust capability providing separate air streams for energy recovery from the exhaust air without supply air contamination.
b. Formed galvanized steel with wood nailer strip and shall be capable of supporting entire unit weight.
c. Permits installation and securing of ductwork to curb prior to mounting unit on the curb.

17. High Altitude Gas Conversion Kit (not available on Ultra Low NOx units):
Package shall contain all the necessary hardware and instructions to convert a standard natural gas unit to operate from 2000 to 7000 ft (610 to 2134 m) elevation with natural gas or from 0 to 7000 ft (0 to 2134 m) elevation with liquefied propane.

18. Outdoor Air Enthalpy Sensor:
The outdoor air enthalpy sensor shall be used to provide single enthalpy control. When used in conjunction with a return air enthalpy sensor, the unit will provide differential enthalpy control. The sensor allows the unit to determine if outside air is suitable for free cooling.

19. Return Air Enthalpy Sensor:
The return air enthalpy sensor shall be used in conjunction with an outdoor air enthalpy sensor to provide differential enthalpy control.

20. Indoor Air Quality (CO_2) Sensor:
a. Shall be able to provide demand ventilation indoor air quality (IAQ) control.
b. The IAQ sensor shall be available in duct mount, wall mount, or wall mount with LED display. The setpoint shall have adjustment capability.

21. Smoke Detectors (factory-installed only):
a. Shall be a 4-Wire Controller and Detector.

b. Shall be environmentally compensated with differential sensing for reliable, stable, and drift-free sensitivity.
c. Shall use magnet-activated test/reset sensor switches.
d. Shall have tool-less connection terminal access.
e. Shall have a recessed momentary switch for testing and resetting the detector.
f. Controller shall include:
1) One set of normally open alarm initiation contacts for connection to an initiating device circuit on a fire alarm control panel.
2) Two Form-C auxiliary alarm relays for interface with rooftop unit or other equipment.
3) One Form-C supervision (trouble) relay to control the operation of the Trouble LED on a remote test/reset station.
4) Capable of direct connection to 2 individual detector modules.
5) Can be wired to up to 14 other duct smoke detectors for multiple fan shutdown applications.

22. Winter Start Kit:
a. Shall contain a bypass device around the low pressure switch.
b. Shall be required when mechanical cooling is required below 40°F (4°C).
c. Shall not be required to operate an economizer for cooling when below an outdoor ambient of 40°F (4°C).
d. Is not compatible with SystemVu controls.

23. Time Guard:
a. Shall prevent compressor short-cycling by providing a 5-minute delay (±2 minutes) before restarting a compressor after shutdown for any reason.
b. One device shall be required per compressor.

24. Hinged Access Panels:
a. Shall provide easy access through integrated quarter turn latches.
b. Shall be on major panels of: filter, control box, fan motor, and compressor.

25. Condensate Overflow Switch:
This sensor and related controller monitors the condensate level in the drain pan and shuts down compression operation when overflow conditions occur. It includes:
a. Indicator light — solid red (more than 10 seconds on water contact — compressors disabled), blinking red (sensor disconnected).
b. 10 second delay to break — eliminates nuisance trips from splashing or waves in pan (sensor needs 10 seconds of constant water contact before tripping).
c. Disables the compressor(s) operation when condensate plug is detected, but still allows fans to run for economizer.

26. 4 in. MERV-13 Return Air Filters (factory-installed only):
a. Factory option to upgrade standard unit filters to 4 in. MERV-13 filters.
b. Upgraded option shall include factory-installed 4 in. filter rack
c. Shall not be compatible with horizontal units with field installed economizers.
d. Shall not be compatible with size 04-06 units with Humidi-MiZer or any single phase units.

27. 4 in. Return Air Rack (field-installed only):
a. Accessory kit is designed to hold 4 in. MERV-8 or MERV-13 filters. Filters not included in kit.
b. Shall not be compatible with horizontal units with field installed economizers.
c. Shall not be compatible with size 04-06 units with Humidi-MiZer.

28. 2 in. MERV-13 Return Air Filters:
a. Accessory kit to field upgrade standard unit filters to 2 in. MERV-13 filters.
b. Correct size and quantity of filters shall ship in a single box.

29. 2 in. MERV-8 Return Air Filters:
a. Accessory kit to field upgrade standard unit filters to 2 in. MERV-8 filters.
b. Correct size and quantity of filters shall ship in a single box.

30. Phase Monitor Control:
a. Shall monitor the sequence of 3-phase electrical system to provide a phase reversal protection.
b. Shall monitor the 3-phase voltage inputs to provide a phase loss protection for the 3-phase device.
c. Will work on either a Delta or Wye power connection.

31. Horn/Strobe Annunciator:
a. Provides an audible/visible signaling device for use with factory-installed option or field-installed accessory smoke detectors.
b. Requires installation of a field-supplied 24-v transformer suitable for 4.2 VA (AC) or 3.0 VA (DC) per horn/strobe accessory.
c. Requires field-supplied electrical box, North American 1-gang box, 2 in. (51 mm) x 4 in. (102 mm).

d. Shall have a clear colored lens.

32. High Short Circuit Current Rating (SCCR) Protection:

a. Factory-installed option shall provide high short circuit current protection to compressor and all indoor and outdoor fan motors rated at 10 kA against high potential fault current situations. (Standard unit comes with 5 kA rating.)

b. This option is not available with factory-installed Ultra Low NOx heater, Humidi-MiZer, powered convenience outlet, non-fused disconnect, low ambient controls, phase loss monitor/protection, or 575-v models.

Note about this specification:
This specification is in the "Masterformat" as published by the Construction Specification Institute. Please feel free to copy this specification directly into your building spec.

Cooling Only/Electric Heat Packaged Rooftop

HVAC Guide Specifications

Size Range: **3 to 6 Nominal Tons**

Carrier Model Number: **50FE-04-07**

Part 1 — (23 06 80) Schedules for Decentralized HVAC Equipment

1.01 (23 06 80.13) Decentralized Unitary HVAC Equipment Schedule:

A. (23 06 80.13.A.) Rooftop Unit (RTU) Schedule:

1. Schedule is per the project specification requirements.

Part 2 — (23 07 16) HVAC Equipment Insulation

2.01 (23 07 16.13) Decentralized, Rooftop Units:

A. (23 07 16.13.A.) Evaporator Fan Compartment:

1. Interior cabinet surfaces shall be insulated with a minimum 1/2 in. thick, minimum 1-1/2 lb density, flexible fiberglass insulation bonded with a phenolic binder, neoprene coated on the air side.
2. Insulation and adhesive shall meet NFPA 90A requirements for flame spread and smoke generation.

B. (23 07 16.13.B.) Electric Heat Compartment:

1. Aluminum foil-faced fiberglass insulation shall be used.
2. Insulation and adhesive shall meet NFPA 90A requirements for flame spread and smoke generation.

Part 3 — (23 09 13) Instrumentation and Control Devices for HVAC

3.01 (23 09 13.23) Sensors and Transmitters:

A. (23 09 13.23.A.) Thermostats:

1. Thermostat must:
   a. energize both "W" and "G" when calling for heat.
   b. have capability to energize 1 or 2 stages of cooling, and 2 different stages of heating.
   c. include capability for occupancy scheduling.

Part 4 — (23 09 23) Direct Digital Control System for HVAC

4.01 (23 09 23.13) Decentralized, Rooftop Units:

A. (23 09 23.13.A.) SystemVu™ intelligent integrated Direct Digital Control (DDC) shall provide:

1. Integrated unit operation for comfort cooling, heating ventilation as well as all monitoring, recording and reporting capabilities. Controller shall also provide diagnostics and alarms of abnormal unit operation through the controller. Controller shall have an intuitive user display and be able to be used in a standalone operation or via building automation system (BAS).
2. Quick Unit Status LEDs of: Run — meaning all systems are go, ALERT — that indicates there is currently a non-critical issue with the unit, like filters need to be replaced and FAULT — that indicates the unit has a critical issue and will possibly shut down.
3. Six large navigation keys for easy access. Navigation keys shall consist of: TEST, BACK, ENTER, and MENU along with UP and DOWN arrows.
4. Full back lit user display with 4 line by 30 character text capabilities. Display menu shall be designed to provide guided major menus and sub menus main menus provided below:
   a. Shutdown Unit
   b. Run Status
   c. Settings
   d. Alerts/Faults
   e. Service
   f. Inputs
   g. Outputs
   h. USB
5. The capability for standalone operation with conventional thermostat/sensor or use with building automation systems (BAS) of Carrier i-Vu®, BACnet™[1], and Carrier Comfort Network® (CCN) systems. No special modules or boards are required for these capabilities. Has the capability to work with Equipment Touch™ and System Touch™ devices and ZS Sensors.
6. The ability to read refrigerant pressures at display or via BAS network of; Discharge Pressure and Suction Pressure. The need for traditional refrigerant gauges is not required.
7. USB Data Port for flash drive interaction. This will allow the transfer of data for uploads, downloads, perform software upgrades, back-up and restore data and file transfer data such as component number of starts and run hours.

1. Third-party trademarks and logos are the property of their respective owners.

8. Reverse Rotation Protection of compressors if field 3-phase wiring is misapplied.
9. Provide Service Capabilities of:
   a. Auto run test
   b. Manual run test
   c. Component run hours and starts
   d. Commissioning reports
   e. Data logging
   f. Alarm history
10. Economizer control and diagnostics. Set up economizer operation, receive feedback from actuator. Also meets the most recent California Title 24, ASHRAE 90.1 and IECC®[1] Fault Detection and Diagnostic (FDD) requirements.
11. Unit cooling operation down to 40°F (4°C).
12. Controller shall have easy access connections around the controller perimeter area and consist of Mate-N-Lok®[1], terminal block and RJ style modular jack connections.
13. 365 day real time clock, 20 holiday schedules along with occupied and unoccupied scheduling.
14. Auto-recognition for easy installation and commissioning of devices like economizers, space sensors, etc.
15. A 5°F (3°C) temperature difference between cooling and heating setpoints to meet the latest ASHRAE 90.1 Energy Standard.
16. Contain return air sensor, supply air sensor and outdoor air sensor to help monitor and provide data for the unit comfort operation, diagnostic and alarms.
17. Use of Carrier's field accessory Equipment Touch and System Touch devices.
18. Units with the factory-installed Humidi-MiZer® system option are capable of providing multiple modes of improved dehumidification as a variation of the normal cooling cycle.
19. Supply Air Tempering control operates the gas or electric heat to maintain a minimum supply air temperature during conditions where very cold outdoor air causes the supply air temperature to fall below the configured Supply Air Tempering Setpoint. This occurs during periods where DCV is active and increasing the amount of outdoor air or in cases where the system is operating at very low airflow and the calculated economizer position has increased to maintain a constant ventilation rate.
20. Demand limiting in SystemVu™ is achieved through setpoint expansion. The systems heating and cooling setpoints are expanded in steps or levels. The degree to which the setpoints may be expanded is defined by the 6 demand level offsets and the 2 commanded demand limit levels.
21. 3-year limited part warranty.

Part 5 — (23 09 33) Electric and Electronic Control System for HVAC

5.01 (23 09 33.13) Decentralized, Rooftop Units:

A. (23 09 33.13.A.) General:
   1. Shall be complete with self-contained low-voltage control circuit protected by a resettable circuit breaker on the 24-v transformer side. Transformer shall have 75 VA capability.
   2. Shall utilize color-coded wiring.
   3. Shall include a Unit Control Board to conveniently and safely provide connection points for vital control functions such as: smoke detectors, phase monitor, economizer, thermostat, DDC control options, and low and high pressure switches. Controller shall also provide an intuitive means to adjust the indoor fan speed through a simple switch and pot adjustment design.
   4. Unit shall include a minimum of one 8-pin screw terminal connection board for connection of control wiring.

B. (23 09 33.13.B.) Safeties:
   1. Compressor over-temperature, over-current. High internal pressure differential.
   2. Low Pressure Switch:

      Low pressure switch shall use different color wire than the high pressure switch. The purpose is to assist the installer and service technician to correctly wire and or troubleshoot the rooftop unit.
   3. High Pressure Switch:

      High pressure switch shall use different color wire than the low pressure switch. The purpose is to assist the installer and service technician to correctly wire and or troubleshoot the rooftop unit.
   4. Heating section shall be provided with the following minimum protections:
      a. High temperature limit switches.
   5. A2L Refrigerant Leak Dissipation System (Electromechanical):
      a. Leak dissipation system shall consist of control board and A2L sensor certified to UL 60335-2-40.
      b. System shall be designed for the life of the unit.
      c. Dissipation system shall be automatic, ship pre-wired, and require no additional field connections to thermostat to function.
      d. Refrigerant leak sensor shall be installed in UL-certified location and orientation. Sensor shall be self-correcting and resettable. Single

1. Third-party trademarks and logos are the property of their respective owners.

use refrigerant leak sensor shall not be permitted.

e. Factory-installed dissipation controller shall use onboard microprocessor and include:
   1) Automatic reset after a dissipation event has occurred.
   2) Onboard LED with flash code to indicate current unit status and hardware failures.
   3) Depressible "Test" button to allow for a system test and recall/reset of leak detection history.
   4) 24-v dry contact alarm terminal to allow for external notification of leak detection.

f. Dissipation control board shall be accessible via normal maintenance locations and LED shall be visible.

g. Dissipation system shall "Fail Safe" per UL requirements.

h. Dissipation shall allow smoke and building fire systems to override in case of event.

6. A2L Refrigerant Leak Dissipation System (SystemVu):
   a. Leak dissipation system shall consist of control board and A2L sensor certified to UL 60335-2-40, integrated with SystemVu controller.
   b. System shall be designed for the life of the unit.
   c. Dissipation system shall be automatic, ship pre-wired, and require no additional field connections to function.
   d. Refrigerant leak sensor shall be installed in UL-certified location and orientation. Sensor shall be self-correcting and resettable. Single use refrigerant leak sensor shall not be permitted.
   e. Factory-installed dissipation system shall use onboard microprocessor and include:
      1) Automatic leak detection and dissipation algorithm.
      2) Automatic reset after a dissipation event has occurred.
      3) Onboard LED with flash code to indicate current unit status and hardware failures.
      4) Depressible "Test" button to allow for a system test and recall/reset of leak detection history.
      5) 24-v dry contact alarm terminal on dissipation control board to allow for external notification of leak detection.
      6) Ability to notify BAS system of dissipation event via readable alarm point through SystemVu.
      7) Recallable dissipation alarm history on SystemVu controller.
   f. Dissipation control board shall be accessible via normal maintenance locations and LED shall be visible.
   g. Dissipation system shall "Fail Safe" per UL requirements.
   h. Dissipation shall allow smoke and building fire systems to override in case of event.

Part 6 — (23 09 93) Sequence of Operations for HVAC Controls

6.01 (23 09 93.13) Decentralized, Rooftop Units:

A. (23 09 93.13.A.) INSERT SEQUENCE OF OPERATION

Part 7 — (23 40 13) Panel Air Filters

7.01 (23 40 13.13) Decentralized, Rooftop Units:

A. (23 40 13.13.A.) Standard Filter Section:
   1. Shall consist of factory installed, low velocity, disposable 2 in. thick fiberglass filters of commercially available sizes.
   2. Unit shall use only one filter size. Multiple sizes are not acceptable.
   3. Filters shall be accessible through an access panel with "no-tool" removal as described in the unit cabinet section of this specification (23 81 19.13.G).

Part 8 — (23 81 19) Self-Contained Air Conditioners

8.01 (23 81 19.13) Small-Capacity Self-Contained Air Conditioners:

A. (23 81 19.13.A.) General:
   1. Outdoor, rooftop-mounted, electrically controlled cooling unit, utilizing a fully hermetic scroll compressor(s) for cooling duty.
   2. Factory assembled, single-piece cooling rooftop unit. Contained within the unit enclosure shall be all factory wiring, piping, controls, and special features required prior to field start-up.
   3. Unit shall use Puron Advance™ (R-454B) refrigerant.
   4. Unit shall be installed in accordance with the manufacturer's instructions.
   5. Unit must be selected and installed in compliance with local, state, and federal codes.

B. (23 81 19.13.B.) Quality Assurance:
   1. Unit meets DOE and ASHRAE 90.1 minimum efficiency requirements.
   2. Unit shall be rated in accordance with AHRI Standards 210/240 (04-06 sizes) or 340/360 (07 size).
   3. Unit shall be designed to conform to ASHRAE 15.
   4. Unit shall be UL-tested and certified in accordance with ANSI Z21.47 Standards and UL-listed and certified under Canadian standards as a total package for safety requirements.

5. Insulation and adhesive shall meet NFPA 90A requirements for flame spread and smoke generation.
6. Unit casing shall be capable of withstanding 500 hour salt spray exposure per ASTM B117 (scribed specimen).
7. Unit shall be designed in accordance with ISO 9001, and shall be manufactured in a facility registered by ISO 9001:2015.
8. Roof curb shall be designed to conform to NRCA Standards.
9. Unit shall be subjected to a completely automated run test on the assembly line. The data for each unit will be stored at the factory, and must be available upon request.
10. Unit shall be designed in accordance with UL Standards 60335-1 and 60335-2-40, including testing to withstand rain. Unit shall be IPX4 rated.
11. Unit shall be constructed to prevent intrusion of snow and tested to prevent snow intrusion into the control box up to 40 mph.
12. Unit shake tested to assurance level 1, ASTM D4169 to ensure shipping reliability.

C. (23 81 19.13.C.) Delivery, Storage, and Handling:
1. Unit shall be stored and handled per manufacturer's recommendations.
2. Lifted by crane requires either shipping top panel or spreader bars.
3. Unit shall only be stored or positioned in the upright position.

D. (23 81 19.13.D.) Project Conditions:
1. As specified in the contract.

E. (23 81 19.13.E.) Operating Characteristics:
1. Unit shall be capable of starting and running at 115°F (46°C) ambient outdoor temperature, meeting maximum load criteria of AHRI Standard 210/240 or 340/360 at ±10% voltage.
2. Compressor with standard controls shall be capable of operation down to 40°F (4°C), ambient outdoor temperatures.
3. Unit shall discharge supply air vertically or horizontally as shown on contract drawings.
4. Unit shall be factory configured for vertical supply and return configurations.
5. Unit shall be field convertible from vertical to horizontal airflow on all models. No special kit required.
6. Unit shall be capable of mixed operation: vertical supply with horizontal return or horizontal supply with vertical return.

F. (23 81 19.13.F.) Electrical Requirements:
1. Main power supply voltage, phase, and frequency must match those required by the manufacturer.

G. (23 81 19.13.G.) Unit Cabinet:
1. Unit cabinet shall be constructed of galvanized steel, and shall be bonderized and coated with a prepainted baked enamel finish on all externally exposed surfaces.
2. Unit cabinet exterior paint shall be: film thickness, (dry) 0.003 in. minimum, gloss (per ASTM D523, 60°F/16°C): 60, Hardness: H-2H Pencil hardness.
3. Evaporator fan compartment interior cabinet insulation shall conform to AHRI Standards 210/240 and or 340/360 minimum exterior sweat criteria. Interior surfaces shall be insulated with a minimum 1/2 in. thick, 1 lb density, flexible fiberglass insulation, neoprene coated on the air side. Aluminum foil-faced fiberglass insulation shall be used in the heat compartment.
4. Base of unit shall have a minimum of 4 locations for thru-the-base gas and electrical connections (factory-installed or field-installed), standard.
5. Base Rail:
   a. Unit shall have base rails on a minimum of 2 sides.
   b. Holes shall be provided in the base rails for rigging shackles to facilitate maneuvering and overhead rigging.
   c. Holes shall be provided in the base rail for moving the rooftop by fork truck.
   d. Base rail shall be a minimum of 16 gauge thickness.
6. Condensate Pan and Connections:
   a. Shall be a sloped condensate drain pan made of a corrosion resistant material.
   b. Shall comply with ASHRAE Standard 62.
   c. Shall use a 3/4 in. 14 NPT drain connection, possible either through the bottom or side of the drain pan. Connection shall be made per manufacturer's recommendations.
7. Top Panel:
   Shall be a single piece top panel on all sizes.
8. Electrical Connections:
   a. All unit power wiring shall enter unit cabinet at a single, factory prepared, knockout location.
   b. Thru-the-base capability:
      1) Standard unit shall have a thru-the-base electrical location(s) using a raised, embossed portion of the unit basepan.
      2) Optional, factory approved, water-tight connection method must be used for thru-the-base electrical connections.
      3) No basepan penetration, other than those authorized by the manufacturer, is permitted.

9. Component Access Panels (standard):
   a. Cabinet panels shall be easily removable for servicing.
   b. Unit shall have one factory installed, toolless, removable, filter access panel.
   c. Panels covering control box, indoor fan, indoor fan motor, gas components (where applicable), and compressors shall have molded composite handles.
   d. Handles shall be UV modified, composite. They shall be permanently attached, and recessed into the panel.
   e. Screws on the vertical portion of all removable access panel shall engage into heat resistant, molded composite collars.
   f. Collars shall be removable and easily replaceable using manufacturer recommended parts.

H. (23 81 19.13.H.) Coils:
1. Standard Aluminum Fin-Copper Tube Coils:
   a. Standard evaporator and condenser coils shall have aluminum lanced plate fins mechanically bonded to seamless internal helically grooved copper tubes with all joints brazed.
   b. Evaporator coils shall be leak tested to 150 psig, pressure tested to 450 psig, and qualified to UL 60335-2-40 burst test at 1775 psig.
   c. Condenser coils shall be leak tested to 150 psig, pressure tested to 650 psig, and qualified to UL 60335-2-40 burst test at 1980 psig.
2. Optional Pre-coated Aluminum-Fin Condenser Coils (3-Phase Models Only):
   a. Shall have a durable epoxy-phenolic coating to provide protection in mildly corrosive coastal environments.
   b. Coating shall be applied to the aluminum fin stock prior to the fin stamping process to create an inert barrier between the aluminum fin and copper tube.
   c. Epoxy-phenolic barrier shall minimize galvanic action between dissimilar metals.
   d. Corrosion durability of fin stock shall be confirmed through testing to be no less than 1000 hours salt spray per ASTM B117.
   e. Corrosion durability of fin stock shall be confirmed through testing to have no visible corrosion after 48 hour immersion in a room temperature solution of 5% salt, 1% acetic acid.
   f. Fin stock coating shall pass 2000 hours of the following: one week exposure in the prohesion chamber followed by one week of accelerated ultraviolet light testing. Prohesion chamber: the solution shall contain 3.5% sodium chloride and 0.35% ammonium sulfate. The exposure cycle is one hour of salt fog application at ambient followed by one hour drying at 95°F (35°C).
3. Optional Copper-Fin Evaporator and Condenser Coils (3-Phase Models Only):
   a. Shall be constructed of copper fins mechanically bonded to copper tubes and copper tube sheets.
   b. Galvanized steel tube sheets shall not be acceptable.
   c. A polymer strip shall prevent coil assembly from contacting the sheet metal coil pan to minimize potential for galvanic corrosion between coil and pan.
4. Optional E-coated Aluminum-Fin Evaporator and Condenser Coils (3-Phase Models Only):
   a. Shall have a flexible epoxy polymer coating uniformly applied to all coil surface areas without material bridging between fins.
   b. Coating process shall ensure complete coil encapsulation of tubes, fins and headers.
   c. Color shall be high gloss black with gloss per ASTM D523.
   d. Uniform dry film thickness from 0.8 to 1.2 mil on all surface areas including fin edges.
   e. Superior hardness characteristics of 2H per ASTM D3363 and cross-hatch adhesion of 4B-5B per ASTM D3359.
   f. Impact resistance shall be up to 160 in.-lb (ASTM D2794).
   g. Humidity and water immersion resistance shall be up to minimum 1000 and 250 hours respectively (ASTM D2247 and ASTM D870).
   h. Corrosion durability shall be confirmed through testing to be no less than 1000 hours salt spray per ASTM B117.

I. (23 81 19.13.I.) Refrigerant Components:
1. Refrigerant circuit shall include the following control, safety, and maintenance features:
   a. Fixed orifice metering system on 04-06 models and TXV on 07 size models shall include a multiple feed distribution system that optimizes coil performance.
   b. Refrigerant filter drier, solid core design with pre and post-filter service gauge connections for filter diagnostics and maintenance.
   c. Service gauge connections on suction and discharge lines.
   d. Pressure gauge access through a specially designed access port in the top panel of the unit.

2. There shall be gauge line access port in the skin of the rooftop, covered by a black, removable plug.
   a. The plug shall be easy to remove and replace.
   b. When the plug is removed, the gauge access port shall enable maintenance personnel to route their pressure gauge lines.
   c. This gauge access port shall facilitate correct and accurate condenser pressure readings by enabling the reading with the compressor access panel on.
   d. The plug shall be made of a leak proof, UV-resistant, composite material.
3. Compressors:
   a. Unit shall use fully hermetic scroll compressors.
   b. Compressor motors shall be cooled by refrigerant gas passing through motor windings.
   c. Compressors shall be internally protected from high discharge temperature conditions.
   d. Compressors shall be protected from an over-temperature and over-amperage conditions by an internal, motor overload device.
   e. Compressor shall be factory mounted on rubber grommets.
   f. Compressor motors shall have internal line break thermal, current overload and high pressure differential protection.
   g. Crankcase heaters shall not be required for normal operating range, unless required by compressor manufacturer due to refrigerant charge limits.
   h. Compressor on 04-06 models shall be of a single stage cooling capacity design and 07 models shall be a 2 stage cooling capacity design.

J. (23 81 19.13.J.) Filter Section:
1. Filters access is specified in the unit cabinet section of this specification.
2. Filters shall be held in place by a pivoting filter tray, facilitating easy removal and installation.
3. Shall consist of factory installed, low velocity, throw-away 2 in. thick fiberglass filters.
4. Filters shall be standard, commercially available sizes.
5. Only one size filter per unit is allowed.

K. (23 81 19.13.K.) Evaporator Fan and Motor with EcoBlue™ Technology:
1. Direct Drive Evaporator Fan Motor:
   a. Shall be an ECM motor design.
   b. Shall be direct drive design for all static options.
   c. Shall have permanently lubricated bearings.
   d. Shall have inherent automatic-reset thermal overload protection.
   e. Shall have slow ramp-up to speed capabilities.
   f. Shall require no fan/motor belts for operation, adjustments and or initial fan speed set up.
   g. Fan DC voltage set up on Unit Control Board can eliminate the need of removal of blower access door, required on conventional belt drive systems.
   h. Shall be internally protected from electrical phase reversal.
2. Evaporator Fan:
   a. Speed shall be easily set with dedicated selection switch and adjustment pot on unit control board or through SystemVu™ controller.
   b. On sizes 04-06 single speed indoor fan operation provided and on 07 size model with 2 stage cooling capacity control, the indoor fan speed is automatically controlled to meet the code-compliant 66% low fan speed and 100% at full fan speed operation.
   c. Blower fan shall be a vane axial fan design with fan assembly secured directly to ECM motor. Additional shafts, belts, pulleys/sheaves, and bearing blocks to drive fan shall not be permitted or necessary.
   d. Additional variable frequency drive to control fan motor speed shall not be permitted or necessary. All speed control electronics must be on board fan motor assembly.
   e. Shall be constructed of a cast aluminum stator and high impact composite material on rotor and air inlet casing.
   f. Shall be a patented / pending design with a corrosion resistant material.
   g. Fan assembly design shall be integrated into fan deck, dynamically balanced, and require no additional vibration isolation for normal operation.
   h. Shall have slow ramp-up to speed capabilities to help reduce sound and comfort issues typically associated with single speed belt drive systems.
   i. Shall be a slide out design with 2 screw removal.
3. Shall include an easily accessible Unit Control Board to conveniently and safely provide connection points for vital control functions such as: smoke detectors, phase monitor, economizer, thermostat, DDC control options, and low and high pressure switches. Controller shall also provide an intuitive means to adjust the indoor fan speed through a simple switch and pot adjustment design.

L. (23 81 19.13.L.) Condenser Fans and Motors:
   1. Condenser Fan Motors:
      a. Shall be a totally enclosed motor.
      b. Shall use permanently lubricated bearings.
      c. Shall have inherent thermal overload protection with an automatic reset feature.
      d. Shall use a shaft-down design on all sizes.
   2. Condenser Fans:
      a. Shall be a direct-driven propeller type fan constructed of high impact composite material.
      b. Shall have high impact composite blades completely formed into one piece without blade fasteners or connectors and shall be dynamically balanced.

M. (23 81 19.13.M.) Special Features Options and Accessories:
   1. Integrated EconomizerONE and EconoMi$er2 Low Leak Rate Models.
      a. Integrated, gear driven opposing modulating blade design type capable of simultaneous economizer and compressor operation.
      b. Independent modules for vertical or horizontal return configuration shall be available. Vertical return modules shall be available as a factory-installed option.
      c. Damper blades shall be galvanized steel with composite gears. Plastic or composite blades on intake or return shall not be acceptable.
      d. Shall include all hardware and controls to provide free cooling with outdoor air when temperature and/or humidity are below setpoints.
      e. Shall be equipped with gear driven dampers for both the outdoor ventilation air and the return air for positive air stream control.
      f. Low leak rate shall be equipped with dampers not to exceed 2% leakage at 1 in. wg pressure differential.
      g. Economizer controller on EconomizerONE models shall be the Siemens POL224 that provides:
         1) Combined minimum and DCV maximum damper position potentiometers with compressor staging relay.
         2) Optional configuration via WLAN stick and Siemens Climatix™[1] smartphone app for easy setup.
         3) Functions with solid-state analog enthalpy or dry bulb changeover control sensing.
         4) LED indication for free cooling, sensor, and damper operation.
         5) One-line LCD interface screen for setup, configuration, and troubleshooting.
         6) On-board Fault Detection and Diagnostics (FDD) that senses and alerts when the economizer is not operating properly, per California Title 24, ASHRAE 90.1 and IECC.
         7) Sensor failure loss of communication identification.
         8) Capabilities for use with multiple-speed or single speed indoor fan systems.
         9) Digital sensors: dry bulb and enthalpy.
      h. Economizer controller on EconoMi$er 2 models with SystemVu™ controllers shall be a 4 to 20 mA design controlled directly by the controller. SystemVu controllers meet California Title 24, ASHRAE 90.1 and IECC Fault Detection and Diagnostic (FDD) requirements.
      i. Shall be capable of introducing up to 100% outdoor air.
      j. Shall be equipped with a barometric relief damper capable of relieving up to 100% return air and contain seals that meet ASHRAE 90.1 requirements.
      k. Shall be designed to close damper(s) during loss-of-power situations with spring return built into motor.
      l. Dry bulb outdoor air temperature sensor shall be provided as standard. Enthalpy sensor is also available on factory installed only. Outdoor air sensor setpoint shall be adjustable and shall range from 40°F to 100°F (4°C to 38°C). Additional sensor options shall be available as accessories.
      m. The economizer controller shall also provide control of an accessory power exhaust unit function. Factory set at 100%, with a range of 0% to 100%.
      n. The economizer shall maintain minimum airflow into the building during occupied period and provide design ventilation rate for full occupancy.
      o. Dampers shall be completely closed when the unit is in the unoccupied mode.
      p. Economizer controller shall accept a 0 to 10 vdc CO_2 sensor input for IAQ/DCV control. In this mode, dampers shall modulate the outdoor air damper to provide ventilation based on the sensor input.
      q. Compressor lockout temperature on POL224 control is adjustable from –45°F to 80°F (–43°C to 26°C), set at a factory default of 32°F (0°C).
      r. Actuator shall be direct coupled to economizer gear. No linkage arms or control rods shall be acceptable.

1. Third-party trademarks and logos are the property of their respective owners.

s. Contains LED indication for free cooling, sensor, and damper operation.

2. Integrated EconomizerONE and EconoMi$er® 2 Ultra Low Leak Rate Models.
   a. Integrated, gear driven opposing modulating blade design type capable of simultaneous economizer and compressor operation.
   b. Independent modules for vertical or horizontal return configuration shall be available. Vertical return modules shall be available as a factory-installed option.
   c. Damper blades shall be galvanized steel with composite gears. Plastic or composite blades on intake or return shall not be acceptable.
   d. Shall include all hardware and controls to provide free cooling with outdoor air when temperature and/or humidity are below setpoints.
   e. Shall be equipped with gear driven dampers for both the outdoor ventilation air and the return air for positive air stream control.
   f. Ultra Low Leak design meets California Title 24 section 140.4 and ASHRAE 90.1 requirements for 4 cfm per sq ft on the outside air dampers and 10 cfm per sq ft on the return dampers.
   g. Economizer controller on EconomizerONE models shall be the Siemens POL224 that provides:
      1) One-line LCD interface screen for setup, configuration, and troubleshooting.
      2) Optional configuration via WLAN stick and Siemens Climatix™ smartphone app for easy setup.
      3) On-board Fault Detection and Diagnostics (FDD) that senses and alerts when the economizer is not operating properly, per California Title 24, ASHRAE 90.1 and IECC.
      4) Sensor failure loss of communication identification.
      5) Capabilities for use with multiple-speed indoor fan systems.
      6) Digital sensors: dry bulb and enthalpy.
   h. Economizer controller on EconoMi$er 2 models with SystemVu™ controls shall be a 4 to 20 mA design controlled directly by the controller. SystemVu controllers meet California Title 24, ASHRAE 90.1 and IECC Fault Detection and Diagnostic (FDD) requirements.
   i. Shall be capable of introducing up to 100% outdoor air.
   j. Shall be equipped with a barometric relief damper capable of relieving up to 100% return air and contain seals that meet ASHRAE 90.1 requirements.
   k. Shall be designed to close damper(s) during loss-of-power situations with spring return built into motor.
   l. Dry bulb outdoor air temperature sensor shall be provided as standard. Enthalpy sensor is also available factory-installed only. Outdoor air sensor setpoint shall be adjustable and shall range from 40°F to 100°F (4°C to 38°C). Additional sensor options shall be available as accessories.
   m. The economizer controller shall also provide control of an accessory power exhaust unit function. Factory set at 100%, with a range of 0% to 100%.
   n. The economizer shall maintain minimum airflow into the building during occupied period and provide design ventilation rate for full occupancy.
   o. Dampers shall be completely closed when the unit is in the unoccupied mode.
   p. Economizer controller shall accept a 0 to 10 vdc CO_2 sensor input for IAQ/DCV control. In this mode, dampers shall modulate the outdoor air damper to provide ventilation based on the sensor input.
   q. Compressor lockout temperature on POL224 control is adjustable from –45°F to 80°F (–43°C to 26°C), set at a factory default of 32°F (0°C).
   r. Actuator shall be direct coupled to economizer gear. No linkage arms or control rods shall be acceptable.
   s. Contains LED indication for free cooling, sensor, and damper operation.
3. Wi-Fi/WLAN Stick for EconomizerONE POL224 (field installed):

   This item allow for the use of the Siemens Climatix™ mobile application.
4. Two-Position Damper (Field-installed only)
   a. Damper shall be a Two-Position Damper. Damper travel shall be from the full closed position to the field adjustable %-open setpoint.
   b. Damper shall include adjustable damper travel from 25% to 100% (full open).
   c. Damper shall include single or dual blade, gear driven dampers and actuator motor.
   d. Actuator shall be direct coupled to damper gear. No linkage arms or control rods shall be acceptable.
   e. Damper will admit up to 100% outdoor air for applicable rooftop units.
   f. Damper shall close upon indoor (evaporator) fan shutoff and/or loss of power.
   g. The damper actuator shall plug into the rooftop unit's wiring harness plug. No hard wiring shall be required.

h. Outside air hood shall include aluminum water entrainment filter.

5. Manual Damper (field-installed only):

   Manual damper package shall consist of damper, air inlet screen, and rain hood which can be preset to admit up to 25% or 50% outdoor air for year round ventilation.

6. Humidi-MiZer Adaptive Dehumidification System (3-Phase Models Only):

   The Humidi-MiZer Adaptive Dehumidification System shall be factory installed and shall provide greater dehumidification of the occupied space by 2 modes of dehumidification operations in addition to its normal design cooling mode:

   a. Subcooling mode further sub cools the hot liquid refrigerant leaving the condenser coil when both temperature and humidity in the space are not satisfied.
   b. Hot gas reheat mode shall mix a portion of the hot gas from the discharge of the compressor with the hot liquid refrigerant leaving the condenser coil to create a 2-phase heat transfer in the system, resulting in a neutral leaving air temperature when only humidity in the space is not satisfied.
   c. Includes low ambient controller.

7. Low Ambient Control Package:

   a. Controller shall control coil head pressure by condenser fan speed modulation or condenser fan cycling and wind baffles.
   b. Shall consist of solid-state control and condenser coil temperature sensor to maintain condensing temperature between 90°F (32°C) and 110°F (43°C) at outdoor ambient temperatures down to –20°F (–29°C). For full low ambient control range, winter start kit is required.

8. Condenser Coil Hail Guard Assembly (Factory-installed on 3-Phase Models Only. Field-installed on all 3 and 1-Phase Models.)

   a. Shall protect against damage from hail.
   b. Shall be either hood style or louvered.

9. Unit-Mounted, Non-Fused Disconnect Switch (Available on units with MOCPs of 80 amps or less):

   a. Switch shall be factory installed, internally mounted.
   b. National Electric Code (NEC) and UL approved non-fused switch shall provide unit power shutoff.
   c. Shall be accessible from outside the unit.
   d. Shall provide local shutdown and lockout capability.
   e. Sized only for the unit as ordered from the factory. Does not accommodate field-installed devices.

10. Convenience Outlet:

   a. Factory-Installed Powered Convenience Outlet (3-Phase Models Only):
      1) Outlet shall be powered from main line power to the rooftop unit.
      2) Outlet shall be powered from line side or load side of disconnect by installing contractor, as required by code. If outlet is powered from load side of disconnect, unit electrical ratings shall be UL certified and rated for additional outlet amperage.
      3) Outlet shall be factory-installed and internally mounted with easily accessible 115-v female receptacle.
      4) Outlet shall include 15 amp GFI receptacles with independent fuse protection.
      5) Voltage required to operate convenience outlet shall be provided by a factory installed step-down transformer.
      6) Outlet shall be accessible from outside the unit.
      7) Outlet shall include a field installed “Wet in Use” cover.
   b. Factory-Installed Non-Powered Convenience Outlet:
      1) Outlet shall be powered from a separate 115/120v power source.
      2) A transformer shall not be included.
      3) Outlet shall be factory-installed and internally mounted with easily accessible 115-v female receptacle.
      4) Outlet shall include 15 amp GFI receptacles with independent fuse protection.
      5) Outlet shall be accessible from outside the unit.
      6) Outlet shall include a field installed “Wet in Use” cover.
   c. Field-Installed Non-Powered Convenience Outlet:
      1) Outlet shall be powered from a separate 115/120-v power source.
      2) A transformer shall not be included.
      3) Outlet shall be field-installed and internally mounted with easily accessible 115-v female receptacle.
      4) Outlet shall include 20 amp GFI receptacles. This kit provides a flexible installation method which allows code compliance for height requirements of the GFCI outlet from the finished roof surface as well as the capability to

relocate the outlet to a more convenient location.

5) Outlet shall be accessible from outside the unit.

6) Outlet shall include a field installed "Wet in Use" cover.

11. Thru-the-Base Connectors:
    a. Kits shall provide connectors to permit gas and electrical connections to be brought to the unit through the unit basepan.
    b. Minimum of 4 connection locations per unit.
12. Propeller Power Exhaust:
    a. Power exhaust shall be used in conjunction with an integrated economizer.
    b. Independent modules for vertical or horizontal return configurations shall be available.
    c. Horizontal power exhaust shall be mounted in return ductwork.
    d. Power exhaust shall be controlled by economizer controller operation. Exhaust fans shall be energized when dampers open past the 0 to 100% adjustable setpoint on the economizer control.
13. Roof Curbs (Vertical):
    a. Full perimeter roof curb with exhaust capability providing separate air streams for energy recovery from the exhaust air without supply air contamination.
    b. Formed galvanized steel with wood nailer strip and shall be capable of supporting entire unit weight.
    c. Permits installation and securing of ductwork to curb prior to mounting unit on the curb.
14. Outdoor Air Enthalpy Sensor:

    The outdoor air enthalpy sensor shall be used to provide single enthalpy control. When used in conjunction with a return air enthalpy sensor, the unit will provide differential enthalpy control. The sensor allows the unit to determine if outside air is suitable for free cooling.
15. Return Air Enthalpy Sensor:

    The return air enthalpy sensor shall be used in conjunction with an outdoor air enthalpy sensor to provide differential enthalpy control.
16. Indoor Air Quality (CO_2) Sensor:
    a. Shall be able to provide demand ventilation indoor air quality (IAQ) control.
    b. The IAQ sensor shall be available in duct mount, wall mount, or wall mount with LED display. The setpoint shall have adjustment capability.
17. Smoke Detectors:
    a. Shall be a 4-wire controller and detector.
    b. Shall be environmentally compensated with differential sensing for reliable, stable, and drift-free sensitivity.
    c. Shall use magnet-activated test/reset sensor switches.
    d. Shall have tool-less connection terminal access.
    e. Shall have a recessed momentary switch for testing and resetting the detector.
    f. Controller shall include:
        1) One set of normally open alarm initiation contacts for connection to an initiating device circuit on a fire alarm control panel.
        2) Two Form-C auxiliary alarm relays for interface with rooftop unit or other equipment.
        3) One Form-C supervision (trouble) relay to control the operation of the Trouble LED on a remote test/reset station.
        4) Capable of direct connection to 2 individual detector modules.
        5) Can be wired to up to 14 other duct smoke detectors for multiple fan shutdown applications.
18. Winter Start Kit:
    a. Shall contain a bypass device around the low pressure switch.
    b. Shall be required when mechanical cooling is required below 40°F (4°C).
    c. Shall not be required to operate on an economizer for cooling when below an outdoor ambient of 40°F (4°C).
19. Time Guard:
    a. Shall prevent compressor short-cycling by providing a 5-minute delay (±2 minutes) before restarting a compressor after shutdown for any reason.
    b. One device shall be required per compressor.
20. Hinged Access Panels:
    a. Shall provide easy access through integrated quarter turn latches.
    b. Shall be on major panels of: filter, control box, fan motor, and compressor.
21. Condensate Overflow Switch:

    This sensor and related controller monitors the condensate level in the drain pan and shuts down compression operation when overflow conditions occur. It includes:
    a. Indicator light — solid red (more than 10 seconds on water contact — compressors disabled), blinking red (sensor disconnected).

b. 10 second delay to break — eliminates nuisance trips from splashing or waves in pan (sensor needs 10 seconds of constant water contact before tripping).

c. Disables the compressor(s) operation when condensate plug is detected, but still allows fans to run for economizer.

22. 4 in. MERV-13 Return Air Filters (factory-installed only):

a. Factory option to upgrade standard unit filters to 4 in. MERV-13 filters.

b. Upgraded option shall include factory-installed 4 in. filter rack.

c. Shall not be compatible with horizontal units with field-installed economizers.

d. Shall not be compatible with size 04-06 units with Humidi-MiZer or any single phase units.

23. 4 in. Return Air Rack (field-installed only):

a. Accessory kit is designed to hold 4 in. MERV-8 or MERV-13 filters. Filters not included in kit.

b. Shall not be compatible with horizontal units with field installed economizers.

c. Shall not be compatible with size 04-06 units with Humidi-MiZer.

24. 2 in. MERV-13 Return Air Filters:

a. Accessory kit to field upgrade standard unit filters to 2 in. MERV-13 filters.

b. Correct size and quantity of filters shall ship in a single box

25. 2 in. MERV-8 Return Air Filters:

a. Accessory kit to field upgrade standard unit filters to 2 in. MERV-8 filters.

b. Correct size and quantity of filters shall ship in a single box.

26. Phase Monitor Control:

a. Shall monitor the sequence of 3-phase electrical system to provide a phase reversal protection.

b. Shall monitor the 3-phase voltage inputs to provide a phase loss protection for the 3-phase device.

c. Will work on either a Delta or Wye power connection.

27. Horn/Strobe Annunciator:

Provides an audible/visible signaling device for use with factory-installed option or field installed accessory smoke detectors.

a. Requires installation of a field-supplied 24-v transformer suitable for 4.2 VA (AC) or 3.0 VA (DC) per horn/strobe accessory.

b. Requires field-supplied electrical box, North American 1-gang box, 2 in. (51 mm) x 4 in. (102 mm).

c. Shall have a clear colored lens.

28. Electric Heat:

a. Heating Section:

1) Heater element open coil resistance wire, nickel-chrome alloy, 0.29 in. inside diameter, strung through ceramic insulators mounted on metal frame. Coil ends are staked and welded to terminal screw slots.

2) Heater assemblies are provided with integral fusing for protection of internal heater circuits. Auto-reset thermo limit controls, magnetic heater contactors (24-v coil), and terminal block all mounted in electric heater control box (minimum 18 ga galvanized steel) attached to end of heater assembly.

29. High Short Circuit Current Rating (SCCR) Protection:

a. Factory-installed option shall provide high short circuit current protection to compressor and all indoor and outdoor fan motors rated at 10 kA against high potential fault current situations. (Standard unit comes with 5 kA rating.)

b. This option is not available with factory-installed Humidi-MiZer, powered convenience outlet, non-fused disconnect, low ambient controls, phase loss monitor/protection, or 575-v models.

Product Data

WeatherMaker® Single Packaged Rooftop

3 to 6 Nominal Tons

ecoblue™ technology

Puron ADVANCE™

48/50FE**04, 05, 06, 07

48FE: Single-Package Gas Heating/Electric Cooling Rooftop Units
50FE: Electric Cooling Rooftop Units with Optional Electric Heat
with Puron Advance™ Refrigerant (R-454B)

© 2024 Carrier

Form 48-50FE-4-7-01PD

Features/Benefits

Carrier's WeatherMaker® rooftop units (RTUs) with Puron Advance™ and EcoBlue™ Fan Technology offer an eco-friendly solution for a brighter future.

New major design features include:

- Environmentally balanced Puron Advance (R-454B) refrigerant, which delivers a 75% reduction in global warming potential (GWP) compared to the original Puron. Puron Advance's GWP of 466 easily exceeds the EPA (Environmental Protection Agency) requirement of <700 GWP.
- A patented, industry-first vane axial indoor fan system with an electronically commutated motor for simplicity and efficiency. When compared to traditional belt-driven forward curve fans, our reliable system has:
  - 75% fewer moving parts
  - Up to 40% greater efficiency
  - No fan belts, pulleys, shaft, or shaft bearings
  - Better sound and comfort control due to slow ramp-up capability
  - Internal protection from phase reversal and phase loss situations
  - High external static capability
- Reliable single (04-06 sizes) or 2-stage (07 size) cooling designs with fully active evaporator coils
- Unit control board (UCB) with intuitive indoor fan adjustment that uses simple dial and switch configuration
- Reliable copper tube/aluminum fin condenser coil with 5/16 in. tubing to help reduce refrigerant charge and weight versus prior designs
- For 48FE Ultra Low NOx units ONLY (sizes 04-06 only and excluding 575-v units): Carrier-exclusive Ultra Low NOx gas heat emissions burner box and heat exchanger design that provides 14 nanograms/joule (ng/j) operation

Our WeatherMaker 48/50FE 3 to 6 ton units are specifically designed to fit on Carrier roof curbs installed as far back as 1989. That makes replacements fast and easy, eliminating the need for curb adapters or different utility connections.

Single-stage models deliver efficiencies of up to 13.4 SEER2, while two-stage models deliver efficiencies of up to 15.5 IEER. All models are field convertible and capable of either vertical or horizontal airflow.

With "no-strip" screw collars, handled access panels, and more, the unit is easy to install, easy to maintain, and easy to use. Your new 3 to 6 ton Carrier WeatherMaker RTU provides optimum comfort and control from a packaged rooftop.

Value-added features include:

- Optional Humidi-MiZer® adaptive dehumidification system for improved part load humidity performance
- SystemVu™ intuitive, intelligent controls option that provides:
  - Large, full text, multi-line display
  - USB flash port for data transfer
  - Built in i-Vu®, CCN, and BACnet®[1]
  - Easy-to-read refrigerant pressures shown via the display — no checking gauges
  - Quick LED Status for Run, Alert, and Fault
  - Conventional thermostat or sensor capabilities
  - Historical component runtime and starts
  - Supply air tempering
  - Network Service Tool compatibility
- Single point gas and electrical connections
- Fixed refrigerant metering devices on 3 to 5 ton models and TXV on 6 ton models
- Scroll compressors with internal line-break overload protection
- Easy-to-access tool-less filter door, filter tracks that tilt out for filter removal and replacement, and filter size consistency across units

1. Third-party trademarks and logos are the property of their respective owners.

Table of contents

	Page
Features/Benefits	2
Model Number Nomenclature	5
Capacity Ratings	7
Physical Data	11
Options and Accessories	18
Base Unit Dimensions	23
Accessory Dimensions	29
Performance Data	30
Fan Data	44
Electrical Data	101
Typical Wiring Diagrams	120
Sequence of Operation	136
Application Data	139
Guide Specifications — 48FE	141
Guide Specifications — 50FE	154

Features/Benefits (cont)

Easy to install

All 3 to 6 ton WeatherMaker units are field-convertible to horizontal airflow, which makes it easy to adjust to unexpected jobsite complications. Our units are light, making them easy to replace, and our standard integrated unit control board (UCB) has simple, fast, clearly labeled plug-in connection points that reduce installation time. Should a job need additional features, our large control box provides room to work and mount Carrier accessories.

Easy to maintain

With the EcoBlue vane axial fan system and a direct drive ECM motor, belts and pulleys are a thing of the past. Should an adjustment be necessary, it can easily be made via the UCB in the control box. For regular service activities, our easy-access handles provide a quick solution to all commonly accessed service panels, and our sloped, corrosion-resistant composite drain pan sheds water and will not rust. Service gauge connections are included on compressor suction/discharge lines and before and after the filter drier to monitor system operation during maintenance.

Easy to use

Carrier's re-designed unit control board puts all connections and troubleshooting points in one convenient place. Most low voltage connections use the same board and are easy to access. Setting up the fan is simple using an intuitive switch and rotary dial arrangement. Our rooftops have high and low-pressure switches, a filter drier, and 2-in. filters standard.

For 48FE Ultra Low NOx units ONLY: the integrated gas control board operates an intelligent multi speed gas heat inducer motor to help reduce the ultra low NOx emissions. Note that:

1. Units cannot operate with Liquid Propane (LP) gas.
2. Units can operate from 0 to 2000 feet altitude only.

Puron Advance™ Features

In 2018, Carrier announced Puron Advance (R-454B) as our next generation refrigerant for light commercial rooftops. With a GWP of 466 and similar working pressure and performance to R-410A, Puron Advance easily exceeds the EPA's new, stringent <700 GWP refrigerant requirement while minimizing unit redesign. Like other next generation refrigerants (R-32, etc.), R-454B is classified as an "A2L" refrigerant by ASHRAE (American Society of Heating, Refrigerating, and Air-Conditioning Engineers). This designation means that R-454B is "mildly flammable" under certain conditions. While this is a change from legacy "A1 — No Flame Propagation" refrigerants like Puron (R-410A), A2Ls are still very low on the flammability scale and quite safe for use. A2L refrigerants are difficult to ignite and have an extremely low flame speed — much less so than natural gas, propane, or even rubbing alcohol. At Carrier, we are committed to safety. As such, all of our Puron Advance rooftop units include a factory-installed dissipation control board and leak sensor designed to last the lifetime of the unit. This system is certified to UL 60335-2-40 and designed to work right away, without any field configuration or wiring. In the event of a leak, these systems automatically identify and resolve the issue by safely dissipating the refrigerant to ensure there is no risk to equipment, buildings, or occupants.

EcoBlue™ Technology

Our direct drive EcoBlue indoor fan system uses a vane axial fan and electronically commutated motor. The benefit is clear: when compared to legacy belt drive systems, this vane axial design has 75% fewer moving parts, uses up to 40% less energy, and has no belts, blower bearings, or shaft.

Streamlined control and integration

Carrier controllers make connecting WeatherMaker rooftops to existing building automation systems easy. The units are compatible with conventional thermostat controls, SystemVu controls, and third-party building management systems (BMS).

Operating efficiency and flexibility

The 48/50FE rooftops meet ASHRAE 90.1 and IECC®[1] (International Energy Conservation Code) minimum efficiency requirements.

Comfort control

Carrier's patented Humidi-MiZer adaptive dehumidification system is an all-inclusive, factory-installed option on gas heating/electric cooling and electric cooling/electric heat models. This system provides reliable, flexible operation to meet indoor part load sensible and latent requirements.

---

1. Third-party trademarks and logos are the property of their respective owners.

Features/Benefits (cont)

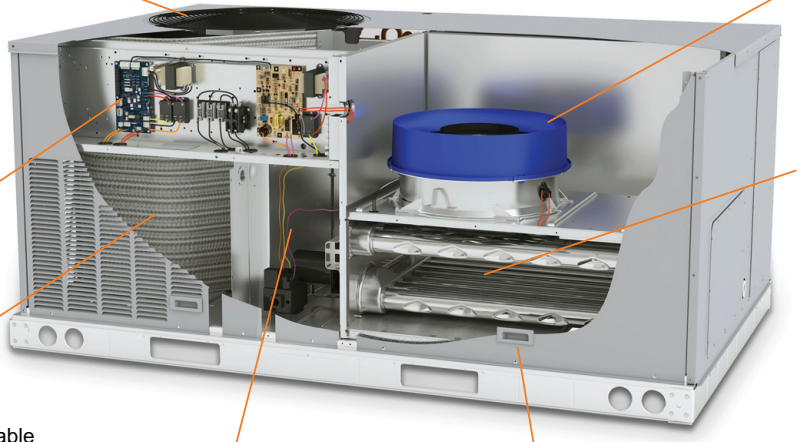

High Efficiency Outdoor Fan
– Non-corrosive blade
– Balanced blade
– Efficient airflow collar

Vane Axial Indoor Fan
– Direct drive ECM
– Slow ramp up
– Phase loss protection
– No belts or pulleys

Unit controls
– Base unit controller
  Switch/dial fan setting
  Large terminal connections
– SystemVu™ option
  Large Display
  Quick LED status
  i-Vu®, CCN®, BACnet

Heating
– Gas Heating
  – Induced draft heat exchanger
  – Multiple sizes available
  – Efficient dimpled gas design
– Electric Heating
  – Multiple sizes available
  – Single point power

Efficient Coils
– Round tube/plate fin
– Copper/Aluminum
– Special coating available
– New 5/16 in. condenser tube
– Humidi-MiZer® system available

Compression
– Fully hermetic scroll
– Internally protected
– Single stage (3 to 5 tons)
– Two stage (6 tons)

Cabinet Design
– Heavy gauge base rails
– Large handled access panels
– Tool-less filter access door
– Replacement “original” fit design

Model number nomenclature

48FE Model Number Nomenclature

Position:	1	2	3	4	5	6	7	8	9	10	11	12	13	14	15	16	17	18
Example:	4	8	F	E	D	A	0	4	A	2	A	6	-	0	A	0	A	0

Unit Heat Type
48 = Gas Heat Packaged Rooftop

Model Series — WeatherMaker®
FE = Entry Tier Puron Advance™

Heat Size
D = Low Gas Heat
E = Medium Gas Heat
F = High Gas Heat
G = Ultra Low NOx, Low Heat[a,b]
H = Ultra Low NOx, High Heat[a,b]
L = Low NOx, Low Heat
S = Low Heat with Stainless Steel Exchanger
R = Medium Heat with Stainless Steel Exchanger
T = High Heat with Stainless Steel Exchanger

Refrig. Systems Options
A = Std One Stage Cooling Models[a]
B = Std One Stage Cooling Models with Humidi-MiZer® [a,c]
M = Single Circuit, Two Stage Cooling Models[c]
N = Single Circuit, Two Stage Cooling Models with Humidi-MiZer[c,d]

Cooling Tons
04 = 3 tons
05 = 4 tons
06 = 5 tons
07 = 6 tons

Sensor Options
A = None
B = Return Air (RA) Smoke Detector
C = Supply Air (SA) Smoke Detector
D = RA + SA Smoke Detector
J = Condensate Overflow Switch
K = Condensate Overflow Switch and RA Smoke Detector
L = Condensate Overflow Switch and RA + SA Smoke Detectors
M = Condensate Overflow Switch and SA Smoke Detector

Fan Options
2 = Standard/Medium Static — EcoBlue Vane Axial Fan
3 = High Static — EcoBlue Vane Axial Fan
5 = Standard/Medium Static — EcoBlue Vane Axial Fan and Filter Status Switch
6 = High Static — EcoBlue Vane Axial Fan and Filter Status Switch

Coil Options (Outdoor - Indoor — Hail Guard)
A = Al/Cu - Al/Cu
B = Precoat Al/Cu - Al/Cu
C = E-coat Al/Cu - Al/Cu
D = E-coat Al/Cu - E-coat Al/Cu
M = Al/Cu - Al/Cu — Louvered Hail Guard
N = Precoat Al/Cu - Al/Cu — Louvered Hail Guard
P = E-coat Al/Cu - Al/Cu — Louvered Hail Guard
Q = E-coat Al/Cu - E-coat Al/Cu — Louvered Hail Guard
R = Cu/Cu - Al/Cu — Louvered Hail Guard
S = Cu/Cu - Cu/Cu — Louvered Hail Guard

Voltage
1 = 575-3-60
3 = 208/230-1-60[a,f]
5 = 208/230-3-60
6 = 460-3-60

Design Revision
- = Factory Design Revision

Base Unit Controls
0 = Electromechanical Controls (allows for use of field-installed economizers)
3 = SystemVu™ Controls
8 = Electromechanical Controls with POL224 EconomizerONE (with Fault Detection and Diagnostic)

Intake / Exhaust Options
A = None
B = Standard Leak Economizer with Barometric Relief
F = Standard Leak Enthalpy Economizer with Barometric Relief
L = ULL (Ultra Low Leak) Temperature Economizer with Barometric Relief and CO_2 Sensor
M = ULL Enthalpy Economizer with Barometric Relief and CO_2 Sensor
U = ULL Temperature Economizer with Barometric Relief
W = ULL Enthalpy Economizer with Barometric Relief

Service Options
0 = None
1 = Unpowered Convenience Outlet (NPCO)
2 = Powered Convenience Outlet (PCO)
3 = Hinged Panels (HP)
4 = Hinged Panels + NPCO
5 = Hinged Panels + PCO
6 = MERV-13 Filters (M13)
7 = NPCO + MERV-13 Filters
8 = PCO + MERV-13 Filters
9 = Hinged Panels + MERV-13 Filters
A = HP + NPCO + MERV-13 Filters
B = HP + PCO + MERV-13 Filters

Electrical Options
A = None
C = Non-Fused Disconnect (NFDC)
D = Thru-the-Base (TTB) Connections
F = Non-Fused Disconnect and TTB Connections
N = Phase Monitor Protection (PMR)
Q = PMR + NFDC
R = PMR + TTB
T = PMR + NFDC + TTB
1 = HSCCR[d] (High Short Circuit Current Rating)
2 = HSCCR[d] + TTB

Packaging & Seismic Compliance
0 = Standard

NOTE(S):
[a] Size 04/05/06 models only.
[b] Not available on 575-v units.
[c] Units with Humidi-MiZer System include Low Ambient controller.
[d] Size 07 models only.
[e] HSCCR is not available on units with: Humidi-MiZer System, Powered Convenience Outlet, Phase Loss Monitor, Non-Fused Disconnect, or 575-v.
[f] The following are not available as a factory-installed options for models with this voltage code: Humidi-MiZer System, Coated Coils or Cu Fin Coils, Louvered Hail Guards, Economizer, Powered Convenience Outlet, or Upgraded MERV filters.

Model number nomenclature (cont)

50FE Model Number Nomenclature

Position:	1	2	3	4	5	6	7	8	9	10	11	12	13	14	15	16	17	18
Example:	5	0	F	E	-	A	0	4	A	2	A	6	-	0	A	0	A	0

Unit Heat Type
50 = Cooling Only Packaged Rooftop with Optional Electric Heat

Model Series — WeatherMaker®
FE = Entry Tier Puron Advance™

Heat Size
- = No Heat
(Field Installed Available)

Refrig. Systems Options
A = Std One Stage Cooling Models[a]
B = Std One Stage Cooling Models with Humidi-MiZer® [a, b]
M = Single Circuit, Two Stage Cooling Models[c]
N = Single Circuit, Two Stage Cooling Models with Humidi-MiZer[b,c]

Cooling Tons
04 = 3 tons
05 = 4 tons
06 = 5 tons
07 = 6 tons

Sensor Options
A = None
B = Return Air (RA) Smoke Detector
C = Supply Air (SA) Smoke Detector
D = RA + SA Smoke Detector
J = Condensate Overflow Switch
K = Condensate Overflow Switch and RA Smoke Detector
L = Condensate Overflow Switch and RA + SA Smoke Detectors
M = Condensate Overflow Switch and SA Smoke Detector

Fan Options
2 = Standard/Medium Static — EcoBlue Vane Axial Fan
3 = High Static — EcoBlue Vane Axial Fan
5 = Standard/Medium Static — EcoBlue Vane Axial Fan and Filter Status Switch
6 = High Static — EcoBlue Vane Axial Fan and Filter Status Switch

Coil Options (Outdoor - Indoor — Hail Guard)
A = Al/Cu - Al/Cu
B = Precoat Al/Cu - Al/Cu
C = E-coat Al/Cu - Al/Cu
D = E-coat Al/Cu - E-coat Al/Cu
M = Al/Cu - Al/Cu — Louvered Hail Guard
N = Precoat Al/Cu - Al/Cu — Louvered Hail Guard
P = E-coat Al/Cu - Al/Cu — Louvered Hail Guard
Q = E-coat Al/Cu - E-coat Al/Cu — Louvered Hail Guard
R = Cu/Cu - Al/Cu — Louvered Hail Guard
S = Cu/Cu - Cu/Cu — Louvered Hail Guard

Voltage
1 = 575-3-60
3 = 208/230-1-60[a,e]
5 = 208/230-3-60
6 = 460-3-60

Design Revision
- = Factory Design Revision

Base Unit Controls
0 = Electromechanical Controls (allows for use of field-installed economizers)
3 = SystemVu™ Controls
8 = Electromechanical Controls with POL224 EconomizerONE (with Fault Detection and Diagnostic)

Intake / Exhaust Options
A = None
B = Standard Leak Economizer with Barometric Relief
F = Standard Leak Enthalpy Economizer with Barometric Relief
L = ULL (Ultra Low Leak) Temperature Economizer with Barometric Relief and CO_2 Sensor
M = ULL Enthalpy Economizer with Barometric Relief and CO_2 Sensor
U = ULL Temperature Economizer with Barometric Relief
W = ULL Enthalpy Economizer with Barometric Relief

Service Options
0 = None
1 = Unpowered Convenience Outlet (NPCO)
2 = Powered Convenience Outlet (PCO)
3 = Hinged Panels (HP)
4 = Hinged Panels + NPCO
5 = Hinged Panels + PCO
6 = MERV-13 Filters (M13)
7 = NPCO + MERV-13 Filters
8 = PCO + MERV-13 Filters
9 = Hinged Panels + MERV-13 Filters
A = HP + NPCO + MERV-13 Filters
B = HP + PCO + MERV-13 Filters

Electrical Options
A = None
C = Non-Fused Disconnect (NFDC)
D = Thru-the-Base (TTB) Connections
F = Non-Fused Disconnect and TTB Connections
N = Phase Monitor Protection (PMR)
Q = PMR + NFDC
R = PMR + TTB
T = PMR + NFDC + TTB
1 = HSCCR[d] (High Short Circuit Current Rating)
2 = HSCCR[d] + TTB

Packaging & Seismic Compliance
0 = Standard

[a] Size 04/05/06 models only.
[b] Units with Humidi-MiZer System include Low Ambient controller.
[c] Size 07 models only.
[d] HSCCR is not available on units with: Humidi-Mizer, Phase Loss Monitor, Non-Fused Disconnect, Powered Convenience Outlet, Low Ambient Controls, or 575-v.
[e] The following are not available as a factory-installed options for models with this voltage code: Humidi-MiZer System, Coated Coils or Cu Fin Coils, Louvered Hail Guards, Economizer, Powered Convenience Outlet, or Upgraded MERV filters.

Capacity ratings

48FE*A 1-Phase AHRI Ratings[a,b,c,d]

48FE UNITS	COOLING STAGES	NOMINAL CAPACITY (tons)	NET COOLING CAPACITY 2 (MBH)	TOTAL POWER 2 (kW)	SEER2	EER2	RATED INDOOR AIRFLOW (cfm)
***A04**	1	3	34.0	3.0	13.4	11.5	1050
***A05**	1	4	48.0	4.2	13.4	11.5	1500
***A06**	1	5	57.5	5.0	13.4	11.4	1500

NOTE(S):

a. Rated in accordance with AHRI Standards 210/240 (04-06 size).
b. Rating are based on:
Cooling Standard: 80°F (27°C) db, 67°F (19°C) wb indoor air temperature and 95°F (35°C) db outdoor air temperature.
c. Units comply with ASHRAE 90.1-2016 (American Society of Heating, Refrigerating, and Air-Conditioning Engineers) and DOE-2023 (Department of Energy) Energy Standard for minimum SEER2 and EER2 requirements.
d. 48FE units comply with US Energy Policy Act (2005). To evaluate code compliance requirements, refer to state and local codes.

48FE*A/M 3-Phase AHRI Ratings[a,b,c,d]

48FE UNITS	COOLING STAGES	NOMINAL CAPACITY (tons)	NET COOLING CAPACITY (MBH)	TOTAL POWER (kW)	SEER	EER
***A04**	1	3	34.4	2.9	14.0	11.80
***A05**	1	4	48.0	4.1	14.0	11.80
***A06**	1	5	57.5	5.0	14.0	11.40
***M07**	2	6	70.0	6.3	—	11.20

48FE UNITS	IEER WITH 2-SPEED INDOOR FAN MOTOR	NET COOLING CAPACITY 2 (MBH)	TOTAL POWER 2 (kW)	SEER2	EER2	RATED INDOOR AIRFLOW (cfm)
***A04**	—	34.0	3.0	13.4	11.50	1050
***A05**	—	48.0	4.2	13.4	11.50	1500
***A06**	—	57.5	5.0	13.4	11.40	1500
***M07**	15.0	—	—	—	—	2400

NOTE(S):

a. Rated in accordance with AHRI Standards 210/240 (04-06 size) and 340/360 (07 size).
b. Rating are based on:
Cooling Standard: 80°F (27°C) db, 67°F (19°C) wb indoor air temperature and 95°F (35°C) db outdoor air temperature.
IEER Standard: A measure that expresses cooling part-load EER efficiency for commercial unitary air-conditioning and heat pump equipment on the basis of weighted operation at various load capacities.
c. Units comply with ASHRAE 90.1-2016 (American Society of Heating, Refrigerating, and Air-Conditioning Engineers) requirements, as well as DOE-2018 (Department of Energy) Energy Standard for minimum SEER and EER requirements and DOE-2023 Energy Standard for minimum SEER2 and EER2 requirements. ASHRAE 90.1 requires M1 ratings on 3-phase models.
d. 48FE units comply with US Energy Policy Act (2005). To evaluate code compliance requirements, refer to state and local codes.

LEGEND

AHRI — Air-Conditioning, Heating and Refrigeration Institute
EER — Energy Efficiency Ratio
IEER — Integrated Energy Efficiency Ratio
MBH — Btuh in thousands
SEER — Seasonal Energy Efficiency Ratio

Capacity ratings (cont)

50FE-A 1-Phase AHRI Ratings[a,b,c,d]

50FE UNITS	COOLING STAGES	NOM. CAPACITY (tons)	NET COOLING CAPACITY 2 (MBH)	TOTAL POWER 2 (KW)	SEER2	EER2	RATED INDOOR AIRFLOW (cfm)
-A04	1	3	34.0	3.0	13.4	11.50	1050
-A05	1	4	48.0	4.2	13.4	11.50	1500
-A06	1	5	57.5	5.0	13.4	11.40	1500

NOTE(S):

a. Rated in accordance with AHRI Standards 210/240 (04-06 size).
b. Rating are based on:
Cooling Standard: 80°F (27°C) db, 67°F (19°C) wb indoor air temperature and 95°F (35°C) db outdoor air temperature.
c. Units comply with ASHRAE 90.1-2016 (American Society of Heating, Refrigerating, and Air-Conditioning Engineers) and DOE-2023 (Department of Energy) Energy Standard for minimum SEER2 and EER2 requirements.
d. 50FE units comply with US Energy Policy Act (2005). To evaluate code compliance requirements, refer to state and local codes.

50FE-A/M 3-Phase AHRI Ratings[a,b,c,d]

50FE UNITS	COOLING STAGES	NOMINAL CAPACITY (tons)	NET COOLING CAPACITY (MBH)	TOTAL POWER (kW)	SEER	EER
-A04	1	3	34.4	2.9	14.0	11.8
-A05	1	4	48.0	4.1	14.0	11.8
-A06	1	5	57.5	5.0	14.0	11.4
-M07	2	6	70.0	6.3	—	11.2

50FE UNITS	IEER WITH 2-SPEED INDOOR FAN MOTOR	NET COOLING CAPACITY 2 (MBH)	TOTAL POWER 2 (kW)	SEER2	EER2	RATED INDOOR AIRFLOW (cfm)
-A04	—	34.0	3.0	13.4	11.50	1050
-A05	—	48.0	4.2	13.4	11.50	1500
-A06	—	57.5	5.0	13.4	11.40	1500
-M07	15.5	—	—	—	—	2400

NOTE(S):

a. Rated in accordance with AHRI Standards 210/240 (04-06 size) and 340/360 (07 size).
b. Rating are based on:
Cooling Standard: 80°F (27°C) db, 67°F (19°C) wb indoor air temperature and 95°F (35°C) db outdoor air temperature.
IEER Standard: A measure that expresses cooling part-load EER efficiency for commercial unitary air-conditioning and heat pump equipment on the basis of weighted operation at various load capacities.
c. Units comply with ASHRAE 90.1-2016 (American Society of Heating, Refrigerating, and Air-Conditioning Engineers) requirements, as well as DOE-2018 (Department of Energy) Energy Standard for minimum SEER and EER and DOE-2023 Energy Standards for minimum SEER2 and EER2 requirements. ASHRAE 90.1 requires M1 ratings on 3-phase models.
d. 50FE units comply with US Energy Policy Act (2005). To evaluate code compliance requirements, refer to state and local codes.

LEGEND

AHRI — Air-Conditioning, Heating and Refrigeration Institute
EER — Energy Efficiency Ratio
IEER — Integrated Energy Efficiency Ratio
MBH — Btuh in thousands
SEER — Seasonal Energy Efficiency Ratio

Capacity ratings (cont)

Sound Ratings Table

48/50FE UNIT	COOLING STAGES	OUTDOOR SOUND (dB) at 60 Hz[a,b]								
		A-Weighted[c]	63	125	250	500	1000	2000	4000	8000
**04	1	79	85.6	84.7	80.5	76.0	72.4	68.0	62.8	59.3
**05	1	79	85.6	84.7	80.5	76.0	72.4	68.0	62.8	59.3
**06	1	79	85.6	84.7	80.5	76.0	72.4	68.0	62.8	59.3
**07	2	79	85.6	84.7	80.5	76.0	72.4	68.0	62.8	59.3

NOTE(S):

a. Outdoor sound data is measured in accordance with AHRI.
b. Measurements are expressed in terms of sound power. Do not compare these values to sound pressure values because sound pressure depends on specific environmental factors which normally do not match individual applications. Sound power values are independent of the environment and therefore more accurate.
c. A-weighted sound ratings filter out very high and very low frequencies, to better approximate the response of "average" human ear. A-weighted measurements for Carrier units are taken in accordance with AHRI.

LEGEND

db — Decibel

Minimum - Maximum Airflow Ratings (cfm) — Natural Gas and Propane

VOLTAGE	UNIT	HEAT LEVEL	COOLING				HEATING[a]	
			Minimum Airflow cfm	Minimum 2-Speed Airflow (Low Speed)	Minimum 2-Speed Airflow (High Speed)	Maximum Airflow cfm	Minimum Airflow cfm	Maximum Airflow cfm
1 PHASE	48FE**04	LOW	900	—	—	1500	890	1950
		MED	900	—	—	1500	800	1520
		HIGH	900	—	—	1500	—	—
	48FE**05	LOW	1200	—	—	2000	890	2440
		MED	1200	—	—	2000	1050	2280
		HIGH	1200	—	—	2000	1220	2170
	48FE**06	LOW	1500	—	—	2500	890	3250
		MED	1500	—	—	2500	1050	2730
		HIGH	1500	—	—	2500	1220	2790
3 PHASE	48FE**04	LOW	900	—	—	1500	910	2010
		MED	900	—	—	1500	960	1630
		HIGH	900	—	—	1500	—	—
	48FE**05	LOW	1200	—	—	2000	910	2010
		MED	1200	—	—	2000	1250	2330
		HIGH	1200	—	—	2000	1390	2220
	48FE**06	LOW	1500	—	—	2500	910	2510
		MED	1500	—	—	2500	1250	2720
		HIGH	1500	—	—	2500	1390	2780
	48FE**07	LOW	1800	1200	1800	3000	910	3350
		MED	1800	1200	1800	3000	1250	3260
		HIGH	1800	1200	1800	3000	1390	3170

NOTE(S):

a. Heating rating values are identical for aluminum heat exchangers and stainless steel heat exchangers.

Minimum - Maximum Airflow Ratings (cfm) — 48FE Ultra Low NOx Units

48FE ULTRA LOW NOx UNIT SIZE	HEAT LEVEL	COOLING				ULTRA LOW NOx HEATING	
		Minimum Airflow cfm	Minimum 2-Speed Airflow (Low Speed)	Minimum 2-Speed Airflow (High Speed)	Maximum Airflow cfm	Minimum Airflow at 300 cfm/ton	Maximum Airflow at 300 cfm/ton
04	LOW	900	—	—	1500	900	1500
	MED	900	—	—	1500	1030	1500
05	LOW	1200	—	—	2000	1200	2000
	MED	1200	—	—	2000	1200	2000
06	LOW	1500	—	—	2500	1500	2500
	MED	1500	—	—	2500	1500	2500

Capacity ratings (cont)

Minimum - Maximum Airflow Ratings (cfm) — Cooling Units and Accessory Electric Heat

50FE UNIT SIZE	COOLING				ELECTRIC HEAT[a]	
	Minimum Airflow cfm	Minimum 2-Speed Airflow (Low Speed)	Minimum 2-Speed Airflow (High Speed)	Maximum Airflow cfm	Minimum Airflow cfm	Maximum Airflow cfm
-*04	900	—	—	1500	900	1500
-*05	1200	—	—	2000	1200	2000
-*06	1500	—	—	2500	1500	2500
-*07	1800	1200	1800	3000	1800	3000

NOTE(S):

a. Electric heat modules are available as field-installed accessories for 50FE units.

Heat Rating Table — Natural Gas and Propane

48FE UNIT		GAS HEAT	AL/SS HEAT EXCHANGER		TEMPERATURE RISE (°F)	THERMAL EFFICIENCY (%)	AFUE EFFICIENCY (%)
			Input/Output Stage 1 (MBH)	Input/Output Stage 2 (MBH)			
1 PHASE	04	LOW	—	65/53	25-55	81	81
		MED	—	90/73	45-85	82	81
		HIGH	—	—	—	—	—
	05	LOW	—	65/53	20-55	81	81
		MED	—	90/73	30-65	82	81
		HIGH	—	130/106	45-80	81	81
	06	LOW	—	65/53	15-55	81	81
		MED	—	90/73	25-65	82	81
		HIGH	—	130/106	35-80	81	81
3 PHASE	04	LOW	—	67/54	25-55	81	—
		MED	82/65	110/88	50-85	80	—
		HIGH	—	—	—	—	—
	05	LOW	—	67/54	25-55	81	—
		MED	—	110/88	35-65	80	—
		HIGH	120/96	150/120	50-80	80	—
	06	LOW	—	67/54	20-55	81	—
		MED	—	110/88	30-65	80	—
		HIGH	120/96	150/120	40-80	80	—
	07	LOW	—	67/54	15-55	81	—
		MED	—	110/88	25-65	80	—
		HIGH	120/96	150/120	35-80	80	—

Heat Rating Table — Ultra Low NOx

48FE ULTRA LOW NOx UNIT		GAS HEAT	INPUT/OUTPUT (MBH)	TEMPERATURE RISE (°F)	THERMAL EFFICIENCY (%)	AFUE EFFICIENCY (%)
1 PHASE	04	LOW	60 / 49	20-50	81	82
		MED	82 / 66	20-60	81	81
	05	LOW	60 / 49	20-50	81	82
		MED	82 / 66	20-60	81	81
	06	LOW	60 / 49	15-45	81	82
		MED	82 / 66	20-60	81	81
3 PHASE	04	LOW	60 / 49	20-50	81	—
		MED	82 / 66	20-60	81	81
	05	LOW	60 / 49	20-50	81	—
		MED	82 / 66	20-60	81	81
	06	LOW	60 / 49	15-45	81	—
		MED	82 / 66	20-60	81	81

Physical data

48/50FE 3 and 4 Ton Units Physical Data

48/50FE UNIT	48/50FE*A04	48/50FE*B04	48/50FE*A05	48/50FE*B05
NOMINAL TONS	3	3	4	4
BASE UNIT OPERATING WT (lb) 48/50FE[a]	482/437	482/437	543/498	543/498
REFRIGERATION SYSTEM				
No. Circuits/No. Compressors/Type	1 / 1 / Scroll	1 / 1 / Scroll	1 / 1 / Scroll	1 / 1 / Scroll
Puron Advance™ R-454B Charge A/B (lb-oz)	4-5	—	8-13	—
Humidi-MiZer® Puron Advance R-454B Charge A/B (lb-oz)	—	6-11	—	12-14
Oil A/B (oz)	25	25	42	42
Metering Device	Acutrol	Acutrol	Acutrol	Acutrol
Humidi-MiZer Metering Device	—	TXV-Acutrol	—	TXV-Acutrol
High-Pressure Trip/Reset (psig)	630/505	630/505	630/505	630/505
Low-Pressure Trip/Reset (psig)	54/117	27/44	54/117	27/44
EVAPORATOR COIL				
Material (Tube/Fin)	Cu/Al	Cu/Al	Cu/Al	Cu/Al
Coil Type	3/8 in. RTPF	3/8 in. RTPF	3/8 in. RTPF	3/8 in. RTPF
Rows/FPI	2/15	2/15	3/15	3/15
Total Face Area (ft^2)	5.5	5.5	5.5	5.5
Condensate Drain Connection Size	3/4 in.	3/4 in.	3/4 in.	3/4 in.
CONDENSER COIL				
Material	Cu/Al	Cu/Al	Cu/Al	Cu/Al
Coil Type	5/16 in. RTPF	5/16 in. RTPF	5/16 in. RTPF	5/16 in. RTPF
Rows/FPI	1/18	1/18	2/18	2/18
Total Face Area (ft^2)	14.6	14.6	15.9	15.9
HUMIDI-MIZER COIL				
Material	—	Cu/Al	—	Cu/Al
Coil Type	—	3/8 in. RTPF	—	3/8 in. RTPF
Rows/FPI	—	1/17	—	2/17
Total Face Area (ft^2)	—	4.1	—	4.1
EVAPORATOR FAN AND MOTOR				
Standard/Medium Static 1 Phase				
Motor Qty/Drive Type	1 / Direct	—	1 / Direct	—
Maximum Cont Bhp	0.71	—	1.06	—
Rpm Range	219-2190	—	217-2170	—
Fan Qty/Type	1 / Vane Axial	—	1 / Vane Axial	—
Fan Diameter (in.)	16.6 in.	—	16.6 in.	—
High Static 1 Phase				
Motor Qty/Drive Type	1 / Direct	—	1 / Direct	—
Maximum Cont Bhp	1.07	—	1.53	—
Rpm Range	249-2490	—	246-2460	—
Fan Qty/Type	1 / Vane Axial	—	1 / Vane Axial	—
Fan Diameter (in.)	16.6 in.	—	16.6 in.	—
Standard/Medium Static 3 Phase				
Motor Qty/Drive Type	1 / Direct	1 / Direct	1 / Direct	1 / Direct
Maximum Cont Bhp	0.71	0.71	1.06	1.06
Rpm Range	219-2190	219-2190	217-2170	217-2170
Fan Qty/Type	1 / Vane Axial	1 / Vane Axial	1 / Vane Axial	1 / Vane Axial
Fan Diameter (in.)	16.6 in.	16.6 in.	16.6 in.	16.6 in.
High Static 3 Phase				
Motor Qty/Drive Type	1 / Direct	1 / Direct	1 / Direct	1 / Direct
Maximum Cont Bhp	1.07	1.07	1.96	1.96
Rpm Range	249-2490	249-2490	266-2660	266-2660
Fan Qty/Type	1 / Vane Axial	1 / Vane Axial	1 / Vane Axial	1 / Vane Axial
Fan Diameter (in.)	16.6 in.	16.6 in.	16.6 in.	16.6 in.
CONDENSER FAN AND MOTOR				
Qty / Motor Drive Type	1 / Direct	1 / Direct	1 / Direct	1 / Direct
Motor HP/Rpm	1/4 / 1100	1/4 / 1100	1/4 / 1100	1/4 / 1100
Fan Diameter (in.)	23 in.	23 in.	23 in.	23 in.

48/50FE 3 and 4 Ton Units Physical Data (cont)

48/50FE UNIT	48/50FE*A04	48/50FE*B04	48/50FE*A05	48/50FE*B05
FILTER				
RA Filter Qty / Size (in.)	2 / 16 x 25 x 2	2 / 16 x 25 x 2	2 / 16 x 25 x 2	2 / 16 x 25 x 2
OA Inlet Screen Qty / Size (in.)	1 / 20 x 24 x 1	1 / 20 x 24 x 1	1 / 20 x 24 x 1	1 / 20 x 24 x 1

NOTE(S):

a. Base unit operating weight does not include weight of options.

LEGEND

Bhp — Brake Horsepower
FPI — Fins Per Inch
OA — Outdoor Air
RA — Return Air

Physical data (cont)

48/50FE 5 and 6 Ton Units Physical Data

48/50FE UNIT	48/50FE*A06	48/50FE*B06	48/50FE*M07	48/50FE*N07
NOMINAL TONS	5	5	6	6
BASE UNIT OPERATING WT (lb) 4850FE[a]	556/511	556/511	607/562	607/562
REFRIGERATION SYSTEM				
No. Circuits/No. Compressors/Type	1 / 1 / Scroll	1 / 1 / Scroll	1 / 1 / 2-Stage Scroll	1 / 1 / 2-Stage Scroll
Puron Advance™ R-454B Charge A/B (lb-oz)	7-11	—	7-13	—
Humidi-MiZer® Puron Advance R-454B Charge A/B (lb-oz)	—	14	—	18-6
Oil A/B (oz)	42	42	42	42
Metering Device	Acutrol	Acutrol	TXV	TXV
Humidi-MiZer Metering Device	—	TXV-Acutrol	—	TXV
High-Pressure Trip/Reset (psig)	630/505	630/505	630/505	630/505
Low-Pressure Trip/Reset (psig)	54/117	27/44	54/117	27/44
EVAPORATOR COIL				
Material (Tube/Fin)	Cu/Al	Cu/Al	Cu/Al	Cu/Al
Coil Type	3/8 in. RTPF	3/8 in. RTPF	3/8 in. RTPF	3/8 in. RTPF
Rows/FPI	4/15	4/15	4/15	4/15
Total Face Area (ft^2)	5.5	5.5	7.3	7.3
Condensate Drain Connection Size	3/4 in.	3/4 in.	3/4 in.	3/4 in.
CONDENSER COIL				
Material	Cu/Al	Cu/Al	Cu/Al	Cu/Al
Coil Type	5/16 in. RTPF	5/16 in. RTPF	5/16 in. RTPF	5/16 in. RTPF
Rows/FPI	2/18	2/18	2/18	2/18
Total Face Area (ft^2)	15.9	15.9	15	15
HUMIDI-MIZER COIL				
Material	—	Cu/Al	—	Cu/Al
Coil Type	—	3/8 in. RTPF	—	3/8 in. RTPF
Rows/FPI	—	2/17	—	2/17
Total Face Area (ft^2)	—	4.1	—	5.5
EVAPORATOR FAN AND MOTOR				
Standard/Medium Static 1 Phase				
Motor Qty/Drive Type	1 / Direct	—	—	—
Maximum Cont Bhp	1.44	—	—	—
Rpm Range	239-2390	—	—	—
Fan Qty/Type	1 / Vane Axial	—	—	—
Fan Diameter (in.)	16.6 in.	—	—	—
High Static 1 Phase				
Motor Qty/Drive Type	1 / Direct	—	—	—
Maximum Cont Bhp	1.96	—	—	—
Rpm Range	266-2660	—	—	—
Fan Qty/Type	1 / Vane Axial	—	—	—
Fan Diameter (in.)	16.6 in.	—	—	—
Standard/Medium Static 3 Phase				
Motor Qty/Drive Type	1 / Direct	1 / Direct	1 / Direct	1 / Direct
Maximum Cont Bhp	1.44	1.44	1.76	1.76
Rpm Range	239-2390	239-2390	253-2530	253-2530
Fan Qty/Type	1 / Vane Axial	1 / Vane Axial	1 / Vane Axial	1 / Vane Axial
Fan Diameter (in.)	16.6 in.	16.6 in.	16.6 in.	16.6 in.
High Static 3 Phase				
Motor Qty/Drive Type	1 / Direct	1 / Direct	1 / Direct	1 / Direct
Maximum Cont Bhp	2.43	2.43	2.43	2.43
Rpm Range	284-2836	284-2836	284-2836	284-2836
Fan Qty/Type	1 / Vane Axial	1 / Vane Axial	1 / Vane Axial	1 / Vane Axial
Fan Diameter (in.)	16.6 in.	16.6 in.	16.6 in.	16.6 in.
CONDENSER FAN AND MOTOR				
Qty / Motor Drive Type	1 / Direct	1 / Direct	1 / Direct	1 / Direct
Motor HP/Rpm	1/4 / 1100	1/4 / 1100	1/4 / 1100	1/4 / 1100
Fan Diameter (in.)	23 in.	23 in.	23 in.	23 in.

48/50FE 5 and 6 Ton Units Physical Data (cont)

48/50FE UNIT	48/50FE*A06	48/50FE*B06	48/50FE*M07	48/50FE*N07
FILTER				
RA Filter Qty / Size (in.)	2 / 16 x 25 x 2	2 / 16 x 25 x 2	4 / 16 x 16 x 2	4 / 16 x 16 x 2
OA Inlet Screen Qty / Size (in.)	1 / 20 x 24 x 1	1 / 20 x 24 x 1	1 / 20 x 24 x 1	1 / 20 x 24 x 1

NOTE(S):

a. Base unit operating weight does not include weight of options.

LEGEND

Bhp — Brake Horsepower
FPI — Fins Per Inch
OA — Outdoor Air
RA — Return Air

48FE 3 to 5 Ton Gas Heat Data — 1-Phase Units

48FE UNIT	48FE**04	48FE**05	48FE**06
GAS CONNECTION			
No. of Gas Valves	1	1	1
Natural Gas Supply Line Pressure (in. wg)/(psig)	4-13 / 0.18-0.47	4-13 / 0.18-0.47	4-13 / 0.18-0.47
Liquid Propane Supply Line Pressure (in. wg)/(psig)	11-13 / 0.40-0.47	11-13 / 0.40-0.47	11-13 / 0.40-0.47
HEAT ANTICIPATOR SETTING (AMPS)			
First Stage	0.14	0.14	0.14
Second Stage	0.14	0.14	0.14
NATURAL GAS HEAT			
LOW			
No. of Stages / No. of Burners (total)	1 / 2	1 / 2	1 / 2
Connection Size	1/2 in. NPT	1/2 in. NPT	1/2 in. NPT
Rollout Switch Opens / Closes (°F)	195 / 115	195 / 115	195 / 115
Temperature Rise (°F)	25-55	20-55	15-55
MEDIUM			
No. of Stages / No. of Burners (total)	1 / 3	1 / 3	1 / 3
Connection Size	1/2 in. NPT	1/2 in. NPT	1/2 in. NPT
Rollout Switch Opens / Closes (°F)	195 / 115	195 / 115	195 / 115
Temperature Rise (°F)	45-85	30-65	25-65
HIGH			
No. of Stages / No. of Burners (total)	—	1 / 3	1 / 3
Connection Size	—	1/2 in. NPT	1/2 in. NPT
Rollout Switch Opens / Closes (°F)	—	195 / 115	195 / 115
Temperature Rise (°F)	—	45-80	35-80
LIQUID PROPANE HEAT			
LOW			
No. of Stages / No. of Burners (total)	1 / 2	1 / 2	1 / 2
Connection Size	1/2 in. NPT	1/2 in. NPT	1/2 in. NPT
Rollout Switch Opens / Closes (°F)	195 / 115	195 / 115	195 / 115
Temperature Rise (°F)	25-55	20-55	15-55
MEDIUM			
No. of Stages / No. of Burners (total)	1 / 3	1 / 3	1 / 3
Connection Size	1/2 in. NPT	1/2 in. NPT	1/2 in. NPT
Rollout Switch Opens / Closes (°F)	195 / 115	195 / 115	195 / 115
Temperature Rise (°F)	45-85	30-65	25-65
HIGH			
No. of Stages / No. of Burners (total)	—	1 / 3	1 / 3
Connection Size	—	1/2 in. NPT	1/2 in. NPT
Rollout Switch Opens / Closes (°F)	—	195 / 115	195 / 115
Temperature Rise (°F)	—	45-80	35-80

48FE 3 to 6 Ton Gas Heat Data — 3-Phase Units

48FE UNIT	48FE**04	48FE**05	48FE**06	48FE**07
GAS CONNECTION				
No. of Gas Valves	1	1	1	1
Natural Gas Supply Line Pressure (in. wg)/(psig)	4-13 / 0.18-0.47	4-13 / 0.18-0.47	4-13 / 0.18-0.47	4-13 / 0.18-0.47
Liquid Propane Supply Line Pressure (in. wg)/(psig)	11-13 / 0.40-0.47	11-13 / 0.40-0.47	11-13 / 0.40-0.47	11-13 / 0.40-0.47
HEAT ANTICIPATOR SETTING (AMPS)				
First Stage	0.14	0.14	0.14	0.14
Second Stage	0.14	0.14	0.14	0.14
NATURAL GAS HEAT				
LOW				
No. of Stages / No. of Burners (total)	1 / 2	1 / 2	1 / 2	1 / 2
Connection Size	1/2 in. NPT	1/2 in. NPT	1/2 in. NPT	1/2 in. NPT
Rollout Switch Opens / Closes (°F)	195 / 115	195 / 115	195 / 115	195 / 115
Temperature Rise (°F)	25-55	25-55	20-55	15-55
MEDIUM				
No. of Stages / No. of Burners (total)	2 / 3	1 / 3	1 / 3	1 / 3
Connection Size	1/2 in. NPT	1/2 in. NPT	1/2 in. NPT	1/2 in. NPT
Rollout Switch Opens / Closes (°F)	195 / 115	195 / 115	195 / 115	195 / 115
Temperature Rise (°F)	50-85	35-65	30-65	25-65
HIGH				
No. of Stages / No. of Burners (total)	—	2 / 3	2 / 3	2 / 3
Connection Size	—	1/2 in. NPT	1/2 in. NPT	1/2 in. NPT
Rollout Switch Opens / Closes (°F)	—	195 / 115	195 / 115	195 / 115
Temperature Rise (°F)	—	50-80	40-80	35-80
LIQUID PROPANE HEAT				
LOW				
No. of Stages / No. of Burners (total)	1 / 2	1 / 2	1 / 2	1 / 2
Connection Size	1/2 in. NPT	1/2 in. NPT	1/2 in. NPT	1/2 in. NPT
Rollout Switch Opens / Closes (°F)	195 / 115	195 / 115	195 / 115	195 / 115
Temperature Rise (°F)	25-55	25-55	20-55	15-55
MEDIUM				
No. of Stages / No. of Burners (total)	2 / 3	1 / 3	1 / 3	1 / 3
Connection Size	1/2 in. NPT	1/2 in. NPT	1/2 in. NPT	1/2 in. NPT
Rollout Switch Opens / Closes (°F)	195 / 115	195 / 115	195 / 115	195 / 115
Temperature Rise (°F)	50-85	35-65	30-65	25-65
HIGH				
No. of Stages / No. of Burners (total)	—	2 / 3	2 / 3	2 / 3
Connection Size	—	1/2 in. NPT	1/2 in. NPT	1/2 in. NPT
Rollout Switch Opens / Closes (°F)	—	195 / 115	195 / 115	195 / 115
Temperature Rise (°F)	—	50-80	40-80	35-80

48FE 3 to 5 Ton Ultra Low NOx Gas Heat Data — 1 and 3-Phase Units

48FE ULTRA LOW NOx UNIT	48FE**04 ULTRA LOW NOx UNIT	48FE**05 ULTRA LOW NOx UNIT	48FE**06 ULTRA LOW NOx UNIT
GAS CONNECTION			
No. of Gas Valves	1	1	1
Natural Gas Supply Line Pressure (in. wg)/(psig)	5-13 / 0.18-0.47	5-13 / 0.18-0.47	5-13 / 0.18-0.47
HEAT ANTICIPATOR SETTING (AMPS)	0.14	0.14	0.14
NATURAL GAS HEAT			
LOW			
No. of Stages / No. of Burners (total)	1 / 1	1 / 1	1 / 1
Connection Size	1/2 in. NPT	1/2 in. NPT	1/2 in. NPT
Burner Thermal Switch Opens / Closes (°F)	350 / 301	350 / 301	350 / 301
Temperature Rise (°F)	20-50	20-50	15-45
MEDIUM			
No. of Stages / No. of Burners (total)	1 / 1	1 / 1	1 / 1
Connection Size	1/2 in. NPT	1/2 in. NPT	1/2 in. NPT
Burner Thermal Switch Opens / Closes (°F)	350 / 301	350 / 301	350 / 301
Temperature Rise (°F)	20-60	20-60	20-60

Options and accessories

ITEM	FACTORY-INSTALLED OPTION	FIELD-INSTALLED ACCESSORY
GAS HEAT (48FE units only)		
Low, Medium or High Gas Heat — Aluminized Heat Exchanger[a]	X	
Low, Medium or High Gas Heat — Stainless Steel Heat Exchanger	X	
Propane Conversion Kit (48FE only)[a]		X
High Altitude Conversion Kit (48FE only)[a]		X
Flue Discharge Deflector (48FE only)		X
Flue Shield[a]		X
ELECTRIC HEAT (50FE units only)		
Electric Resistance Heaters		X
Single Point Kits		X
CABINET		
Thru-the-Base Electrical or Gas-Line Connections	X	X
Hinged Access Panels	X	
MERV-8 Filters		X
MERV-13 Filters, 2 in.		X
MERV-13 Filters, 4 in.	X	
COIL OPTIONS		
Cu/Cu Indoor and/or Outdoor Coils[b,c]	X	
Pre-coated Outdoor Coils[b]	X	
Premium, E-coated Indoor/Outdoor Coils[b]	X	
HUMIDITY CONTROL		
Humidi-MiZer® Adaptive Dehumidification System[b]	X	
CONDENSER PROTECTION		
Condenser Coil Hail Guard (louvered design)[b]	X	X
CONTROLS		
Thermostats, Temperature Sensors, and Subbases		X
SystemVu™ DDC Communicating Controller[d]	X	
Smoke Detector (supply and/or return air)	X	X
Horn Strobe Annunciator[e]		X
Time Guard II Compressor Delay Control Circuit		X
Phase Monitor	X	X
Condensate Overflow Switch	X	X
ECONOMIZERS AND OUTDOOR AIR DAMPERS		
EconomizerONE for Electromechanical Controls, complies with FDD (Standard and Ultra Low Leak damper models)[b,f]	X	X
Wi-Fi Stick for EconomizerONE (optional)		X
EconoMi$er® 2 for DDC controls (Standard and Ultra Low Leak air damper models)[b,d]	X	X
Motorized Two-Position Outdoor-Air Damper		X
Manual Outdoor-Air Damper (25% and 50%)		X
Barometric Relief[g]	X	X
Power Exhaust — Prop Design		X

ITEM	FACTORY-INSTALLED OPTION	FIELD-INSTALLED ACCESSORY
ECONOMIZER SENSORS AND IAQ DEVICES		
Single Dry Bulb Temperature Sensors[h]	X	X
Differential Dry Bulb Temperature Sensors[h]		X
Single Enthalpy Sensors[h]	X	X
Differential Enthalpy Sensors[h]		X
CO_2 Sensor (wall, duct, or unit mounted)[h]	X	X
INDOOR MOTOR AND DRIVE		
Multiple Motor and Drive Packages	X	
Fan Filter Status Switch	X	X
LOW AMBIENT CONTROL		
Winter Start Kit[i,j]		X
Low Ambient Controller to –20°F (–29°C)[i]		X
POWER OPTIONS		
Convenience Outlet (powered)[b]	X	
Convenience Outlet (unpowered)	X	X
Non-Fused Disconnect[k,l]	X	
High SCCR Protection[m]	X	
ROOF CURBS		
Roof Curb 14 in. (356 mm)		X
Roof Curb 24 in. (610 mm)		X

NOTE(S):

a. Not available for 48FE Ultra Low NOx units.
b. Not available as a factory-installed option on single phase (-3 voltage code) models. Use field-installed accessory where available.
c. Cu/Cu coils are only available with louvered hail guards.
d. Models with SystemVu controls comply with California Title 24 Fault Detection and Diagnostic (FDD).
e. Requires a field-supplied 24-v transformer for each application. See price pages for details.
f. FDD (Fault Detection and Diagnostic) capability per California Title 24 section 120.2.
g. Included with economizer.
h. Sensors used to optimize economizer performance.
i. See application data for assistance.
j. Not necessary on SystemVu units, as they are capable of operating at temperatures down to 25°F (4°C).
k. Non-fused disconnect switch cannot be used when unit electrical rating exceeds:
208/230-1-60 and 208/230-3-60 = 80 amps (FLA).
480-3-60 and 575-3-60 = 80 amps (FLA).
Carrier RTUBuilder automatically selects the amp limitations.
l. Not available for 48FE Ultra Low NOx 460-v units.
m. High SCCR (Short Circuit Current Rating) is not available on the following: units with Humidi-MiZer system, low ambient controls, phase loss monitor, non-fused disconnect, powered convenience outlet, or 575-v models.

Factory-installed options

Economizer (dry-bulb or enthalpy)

Economizers save money. They bring in fresh, outside air for ventilation and provide outside air to cool your building. This is the preferred method of low-ambient cooling. When used with CO_2 sensors, economizers can provide even more savings by adjusting the ventilation air intake to just the correct amount.

Economizers are available, installed and tested by the factory, with either enthalpy or dry-bulb temperature inputs. Additional sensors are available as accessories to optimize the economizers.

Economizers include a powered exhaust system and gravity-controlled barometric relief to help equalize building pressures. Gravity-controlled barometric relief also helps equalize ambient air pressures. This can be a cost effective solution to prevent building pressurization. Economizers are available in ultra low leak and standard low leak versions. They can be factory-installed or easily field installed.

Unit-mounted CO_2 sensor

The CO_2 sensor works with the economizer to intake only the correct amount of outside air for ventilation. As occupants fill your building, the CO_2 sensor detects their presence through increasing CO_2 levels and opens the economizer appropriately. When the occupants leave, the CO_2 levels decrease, and the sensor appropriately closes the economizer. This intelligent control of the ventilation air, called demand controlled ventilation (DCV), reduces the overall load on the rooftop, saving money. It is also available as a field-installed accessory.

Smoke detector (supply and/or return air)

Our smoke detectors make your application safer and your job easier. Carrier smoke detectors immediately shut down the rooftop unit when smoke is detected. They are available, installed by the factory, for supply air, return air, or both.

Optional Humidi-MiZer® adaptive dehumidification system

Carrier's Humidi-MiZer adaptive dehumidification system is an all-inclusive factory-installed option that can be ordered with any WeatherMaker® 48/50FE 04-07 rooftop unit, with the exception of single phase voltage (208/230-1-60) units.

This system expands the envelope of operation of Carrier's WeatherMaker rooftop units to provide unprecedented flexibility to meet year-round comfort conditions.

The Humidi-MiZer adaptive dehumidification system has a unique dual operational mode setting. It provides greater dehumidification of the occupied space through 2 modes of dehumidification operations, in addition to its normal design cooling mode.

When coupled with the Humidi-MiZer system, the 48/50FE 04-07 rooftop is capable of operating in normal design cooling mode, sub-cooling mode, and hot gas reheat mode. Normal design cooling mode is when the unit operates under its normal sequence of operation by cycling compressors to maintain comfort conditions.

Sub-cooling mode operates to satisfy part load type conditions when the space requires combined sensible and a higher proportion of latent load control. Hot gas reheat mode operates when outdoor temperatures fall and latent capacity is required for humidity control. Hot gas reheat mode provides neutral air for maximum dehumidification operation.

NOTE: Humidi-MiZer system includes Low Ambient controller.

Thru-the-base connections

Thru-the-base connections, available as a factory option, are necessary to ensure proper connection and seal when routing wire and piping through the rooftop's basepan and curb. These couplings eliminate roof penetration and should be considered for gas lines, main power lines, and control power.

Hinged access panels

These specially designed hinged access panels allow access to the unit's major components. Panels allow access to filters, the control box, and the indoor fan motor.

MERV-13 return air filters

This factory option upgrades the return air filters from standard unit filters to high efficiency 4 in. MERV-13 filters. Uses non-woven MERV-13 filter media with a high strength, moisture-resistant frame. Filter media is securely fastened inside the filter frame on all 4 sides.

Cu/Cu (indoor and outdoor) coils

Copper fins and copper tubes are mechanically bonded to copper tubes and copper tube sheets. A polymer strip prevents the coil assembly from contacting the sheet metal coil pan to minimize the potential for galvanic corrosion between coil and pan. Only available with louvered hail guards.

E-coated (outdoor and indoor) coils

These coils feature a flexible epoxy polymer coating uniformly applied to all coil surface areas without material bridging between fins. The coating process ensures complete coil encapsulation of tubes, fins, and headers.

Pre-coated outdoor coils

These coils feature a durable epoxy-phenolic coating that provides protection in mildly corrosive coastal environments. The coating minimizes galvanic action between dissimilar metals. The coating is applied to the aluminum fin stock prior to the fin stamping process to create an inert barrier between the aluminum fin and copper tube.

Condenser coil hail guard

These sleek, louvered panels protect the condenser coil from hail damage, foreign objects, and incidental contact. This can be purchased as a factory-installed option or as a field-installed accessory.

Single enthalpy sensor

This sensor allows the economizer to account for both the humidity and temperature of outside air conditions, providing additional comfort.

Stainless steel heat exchanger (48FE units only)

For this option, the tubular heat exchanger is made out of a minimum 20 gauge type 409 stainless steel for applications where the mixed air going to the heat exchanger is expected to drop below 45°F (7°C). Stainless steel may be specified on applications where the presence of airborne contaminants require its use (applications such as paper mills) or in areas with very high outdoor humidity that may result in severe condensation in the heat exchanger during cooling operation.

Convenience outlet (powered or unpowered)

Reduce service and/or installation costs by including a convenience outlet in your specification. Carrier will install this service feature at our factory. It provides a convenient, 15 amp, 115-v GFCI receptacle with "Wet in Use" cover. The "powered" option allows the installer to power the outlet from the line side of the disconnect or load side as required by code.

The "unpowered" option is to be powered from a separate 115/120-v power source. This outlet is available as a 15 amp factory-installed option or a 20 amp field-installed accessory.

Non-fused disconnect

This OSHA-compliant, factory-installed safety switch allows a service technician to locally secure power to the rooftop. When selecting a factory-installed non-fused disconnect, note that they are sized for the unit as ordered from the factory. The sizing does not accommodate field-installed items such as power exhaust devices, etc. If field installing electric heat with factory-installed non-fused disconnect switch, a single point kit may or may not be required.

NOTE: Not available for 48FE Ultra Low NOx 460-v units.

SystemVu™ controller

Carrier's SystemVu controller is an optional factory-installed and tested controller.

This option provides a whole new approach by using an intuitive, intelligent controller that not only monitors and controls the unit but also provides linkage to multiple building automation systems.

Each SystemVu controller makes it easy to set up, service, troubleshoot, access historical data, generate reports, and provide comfort only Carrier is noted for.

Key features include:

- Easy-to-read backlit 4-line text screen for superior visibility
- Quick operational condition LEDs for Run, Alert, and Fault
- Simple navigation using large keypad buttons for Navigation arrows, Test, Back, Enter, and Menu
- Capable of being controlled with a conventional thermostat, space sensor, or building automation system
- Service capabilities include:
  Auto run test
  Manual run test
  Component run hours and starts
  Commissioning reports
  Data logging
- Full range of diagnosis:
  Read refrigerant pressures without needing gauges
  Sensor faults
  Compressor reverse rotation
  Economizer diagnostics that meet California Title 24 requirements
- Quick data transfer via USB port:
  Unit configuration uploading/downloading
  Data logging
  Software upgrades
- Built in capacity for:
  i-Vu® open systems
  BACnet® systems
  CCN systems
- Configuration and alarm point capability:
  Contain over 100 alarm codes
  Contain over 260 status, troubleshooting, diagnostic, and maintenance points
  Contain over 270 control configuration setpoints

Condensate overflow switch

This sensor and related controller monitor the condensate level in the drain pan and shut down compression operation when overflow conditions occur. This option:

- Includes an indicator light showing when the sensor is disconnected (blinking red) and when there has been more than 10 seconds of water contact (solid red — compressors disabled)
- Includes a 10-second delay to break, which eliminates nuisance trips from splashing or waves in the pan (sensor needs 10 seconds of constant water contact before tripping)
- Disables the compressor(s) operation when a condensate plug is detected but still allows fans to run for the economizer

Fan filter status switch and maintenance indicator

When the optional factory-installed filter maintenance indicator is used, a factory-installed differential pressure switch measures pressure drop across the outside air filter and activates a field-supplied dry contact indicator when the pressure differential exceeds the adjustable switch setpoint.

High Short Circuit Current Rating (SCCR) protection

This factory-installed option provides high short circuit current protection of 10 kA against high potential fault current situations for the compressor and all indoor and outdoor fan motors. (A standard unit comes with 5 kA rating.)

This option is not available on 575 volt models or models with a factory-installed non-fused disconnect, Humidi-MiZer system, phase loss monitor/protection, powered convenience outlet, or low ambient controls.

Field-installed accessories

Condenser coil hail guard

These sleek, louvered panels protect the condenser coil from hail damage, foreign objects, and incidental contact. This can be purchased as a factory-installed option or as a field-installed accessory.

Differential enthalpy sensor

The differential enthalpy sensor is comprised of an outdoor and a return air enthalpy sensor to provide differential enthalpy control. The sensor allows the unit to determine whether outside air is suitable for free cooling.

Wall or duct-mounted CO_2 sensor

The IAQ sensor shall be available for duct or wall mount. The sensor provides demand ventilation indoor air quality (IAQ) control.

Propane conversion kit (48FE units only)

Convert your gas heat rooftop from standard natural gas operation to propane using this field-installed kit.

NOTE: Not available for 48FE Ultra Low NOx units.

High altitude conversion kit (48FE units only)

High altitudes have less oxygen, which affects the fuel/air mixture in heat exchangers. In order to maintain a proper fuel/air mixture, heat exchangers operating in altitudes above 2000 ft (610 m) require different orifices. To select the correct burner orifices or determine the heat capacity for a high altitude application, use either the selection software or the unit's service manual. High altitudes have less oxygen, which means heat exchangers need less fuel. The new gas orifices in this field-installed kit make the necessary adjustment for high altitude applications. They restore the optimal fuel to air mixture and maintain healthy combustion at altitudes above 2000 ft (610 m).

NOTE: Typical natural gas heating value ranges from 975 to 1050 Btu/ft^3 at sea level nationally. The heating value goes down approximately 1.7% per every thousand feet of elevation. Standard factory orifices can typically be used up to 2000 ft (610 m) elevations without any operational issues.

NOTE: Not available for 48FE Ultra Low NOx units.

Flue discharge deflector (48FE units only)

The flue discharge deflector is a useful accessory when flue gas recirculation is a concern. By venting the flue discharge upwards, the deflector minimizes the chance for a neighboring unit to intake the flue exhaust.

MERV-8 and MERV-13 return air filters

These field-installed accessories provide a return air filter upgrade from standard unit filters to high efficiency MERV-8 or 2 in. MERV-13 filters. Uses non-woven filter media with high strength, moisture-resistant frame. Filter media is securely fastened inside the filter frame on all 4 sides.

Phase monitor protection

The phase monitor control monitors the sequence of the 3-phase electrical system to provide phase reversal protection and monitors the 3-phase voltage inputs to provide phase loss protection for the 3-phase device. It will work on either a Delta or Wye power connection.

Winter start kit

Carrier's winter start kit extends the low ambient limit of your rooftop to 25°F (–4°C). The kit bypasses the low pressure switch, preventing nuisance tripping of the switch. Other low ambient precautions may still be prudent.

Low ambient controller

The low ambient controller is a head pressure controller kit designed to maintain the unit's condenser head pressure during periods of low ambient cooling operation. This device should be used as an alternative to economizer free cooling when economizer usage is either not appropriate or not desired. The low ambient controller will either cycle the outdoor fan motors or operate them at reduced speed to maintain the unit operation, depending on the model. This controller allows cooling operation down to –20°F (–29°C) ambient conditions.

Roof curb (14 in./356 mm or 24 in./610 mm)

This full perimeter roof curb with exhaust capability provides separate air streams for energy recovery from the exhaust air without supply air contamination.

Fan filter status switch and maintenance indicator

When a field-installed filter maintenance indicator is used, a field-installed differential pressure switch measures pressure drop across the outside air filter and activates a field-supplied dry contact indicator when the pressure differential exceeds the adjustable switch setpoint.

Power exhaust

This accessory provides superior internal building pressure control and may eliminate the need for costly external pressure control fans.

Manual OA damper

Manual outdoor air dampers are an economical way to bring in ventilation air. The dampers are available in 25% and 50% versions.

NOTE: See application tip "ROOFTOP-18-01" prior to use of this damper on 07 size models.

Motorized two-position damper

The Carrier two-position, motorized outdoor air damper admits up to 100% outside air. Using reliable, gear-driven technology, the two-position damper opens to allow ventilation air and closes when the rooftop stops, stopping unwanted infiltration.

NOTE: See application tip "ROOFTOP-18-01" prior to use of this damper on 07 size models.

Electric heaters (50FE units only)

Carrier offers a full-line of field-installed accessory heaters. The heaters are very easy to use and install, and they are all pre-engineered and certified.

Time Guard II control circuit

This accessory protects your compressor by preventing short-cycling in the event of some other failure by preventing the compressor from restarting for 30 seconds after stopping. (Not required with SystemVu™ controller or authorized commercial thermostats.)

Wi-Fi Stick for EconomizerONE (optional)

The accessory Wi-Fi/WLAN stick can be connected to the EconomizerONE POL224 economizer controller via the USB host interface. The Wi-Fi stick enables a wireless connection to be made between a smartphone and the economizer controller via the Climatix™[1] mobile application for commissioning, troubleshooting, and maintenance operations. The Wi-Fi stick is required to utilize the mobile application.

1. Third-party trademarks and logos are the property of their respective owners.

Climatix™ mobile application

The Climatix™ mobile application offers a best-in-class user interface and a simple step-by-step commissioning workflow using a mobile device. The user interface walks users through the setup of the controller and allows users to view the operating mode and parameters. Users can adjust setpoints, initiate damper tests, and save the final configuration as a favorite to expedite setup in the future.

The application is available on Android™[1] and Apple iOS®[1] platforms. The Wi-Fi stick for the EconomizerONE is required to join the Siemens-WiFi-Stick network and setup the controller on a smartphone.

Options and Accessory Weights

OPTION / ACCESSORY NAME	48/50FE UNIT WEIGHT[a]							
	04		05		06		07	
	lb	kg	lb	kg	lb	kg	lb	kg
Humidi-MiZer® System[b]	15	7	15	7	15	7	24	11
Power Exhaust — Vertical or Horizontal	45	21	45	21	45	21	45	21
EconomizerONE or EconoMi$er® 2	51	23	51	23	51	23	51	23
Two-Position Damper	39	18	39	18	39	18	58	26
Manual Damper	12	5	12	5	12	5	18	8
Medium Gas Heat (48FE units only)[c]	9	4	9	4	9	4	15	7
High Gas Heat (48FE units only)[c]	—	—	63	29	63	29	63	29
Hail Guard (louvered)	13	6	13	6	13	6	17	8
Cu/Cu Condenser Coil	37	17	74	34	74	34	95	43
Cu/Cu Evaporator Coil	38	17	38	17	38	17	70	32
Roof Curb (14 in. curb)	95	43	95	43	95	43	95	43
Roof Curb (24 in. curb)	150	68	150	68	150	68	150	68
CO_2 Sensor	2	1	2	1	2	1	2	1
Flue Discharge Deflector	7	3	7	3	7	3	7	3
Optional Indoor Motor/Drive	10	5	10	5	10	5	15	7
Low Ambient Controller	9	4	9	4	9	4	9	4
Winter Start Kit	5	2	5	2	5	2	5	2
Return Air Smoke Detector	7	3	7	3	7	3	7	3
Supply Air Smoke Detector	7	3	7	3	7	3	7	3
Fan Filter Switch	2	1	2	1	2	1	2	1
Non-Fused Disconnect	15	7	15	7	15	7	15	7
Powered Convenience Outlet[d]	36	16	36	16	36	16	36	16
Unpowered Convenience Outlet	4	2	4	2	4	2	4	2
Enthalpy Sensor	2	1	2	1	2	1	2	1
Differential Enthalpy Sensor	3	1	3	1	3	1	3	1

NOTE(S):

a. Where multiple variations are available, the heaviest combination is listed.
b. For Humidi-MiZer system, add low ambient controller weight.
c. Values do not apply for 48FE Ultra Low NOx units.
d. Weight includes convenience outlet and convenience outlet transformer.

48FE**04-07 Base Unit Dimensions

NOTES:

1. DIMENSIONS ARE IN INCHES, DIMENSIONS IN [ ] ARE IN MILLIMETERS.
2. CENTER OF GRAVITY
3. DIRECTION OF AIR FLOW
4. ALL VIEW DRAWN USING 3RD ANGLE

UNIT	J	K
48FE**04	33 3/8 [847]	18 5/8 [472]
48FE**05	33 3/8 [847]	14 7/8 [377]
48FE**06	33 3/8 [847]	14 7/8 [377]
48FE**07	41 3/8 [1051]	18 5/8 [472]

Carrier

THIS DOCUMENT IS THE PROPERTY OF CARRIER CORPORATION AND IS DELIVERED UPON THE EXPRESS CONDITION THAT THE CONTENTS WILL NOT BE DISCLOSED OR USED WITHOUT CARRIER CORPORATION'S WRITTEN CONSENT.

SUBMISSION OF THESE DRAWINGS OR DOCUMENTS DOES NOT CONSTITUTE PART PERFORMANCE OR ACCEPTANCE OF CONTRACT.

	CONNECTION SIZES
A	1 3/8" [35] DIA FIELD POWER SUPPLY HOLE
B	2" [50] DIA POWER SUPPLY KNOCKOUT
C	1 3/4" [51] DIA GAUGE ACCESS PLUG
D	7/8" [22] DIA FIELD CONTROL WIRING HOLE
E	3/4"-14 NPT CONDENSATE DRAIN
F	1/2"-14 NPT GAS CONNECTION
G	2 1/2 " [64] DIA POWER SUPPLY KNOCK-OUT

THRU-THE-BASE CHART
THESE HOLES REQUIRED FOR USE
CRBTMPWR008A00, 009A00

	THREADED CONDUIT SIZE	WIRE USE	REQ'D HOLE SIZES (MAX.)
W	1/2"	115V	7/8" [22.2]
X	1/2"	24V	7/8" [22.2]
Y	3/4"	POWER	1-1/8" [28.6]
Z*	(009A00) 1/2" FPT	GAS	1-1/8" [28.6]
	FOR "THRU-THE-BASEPAN" FACTORY OPTION, FITTINGS FOR ONLY X, Y, & Z ARE PROVIDED		
*	(008A00) PROVIDES 3/4" FPT THRU CURB FLANGE & FITTING.		

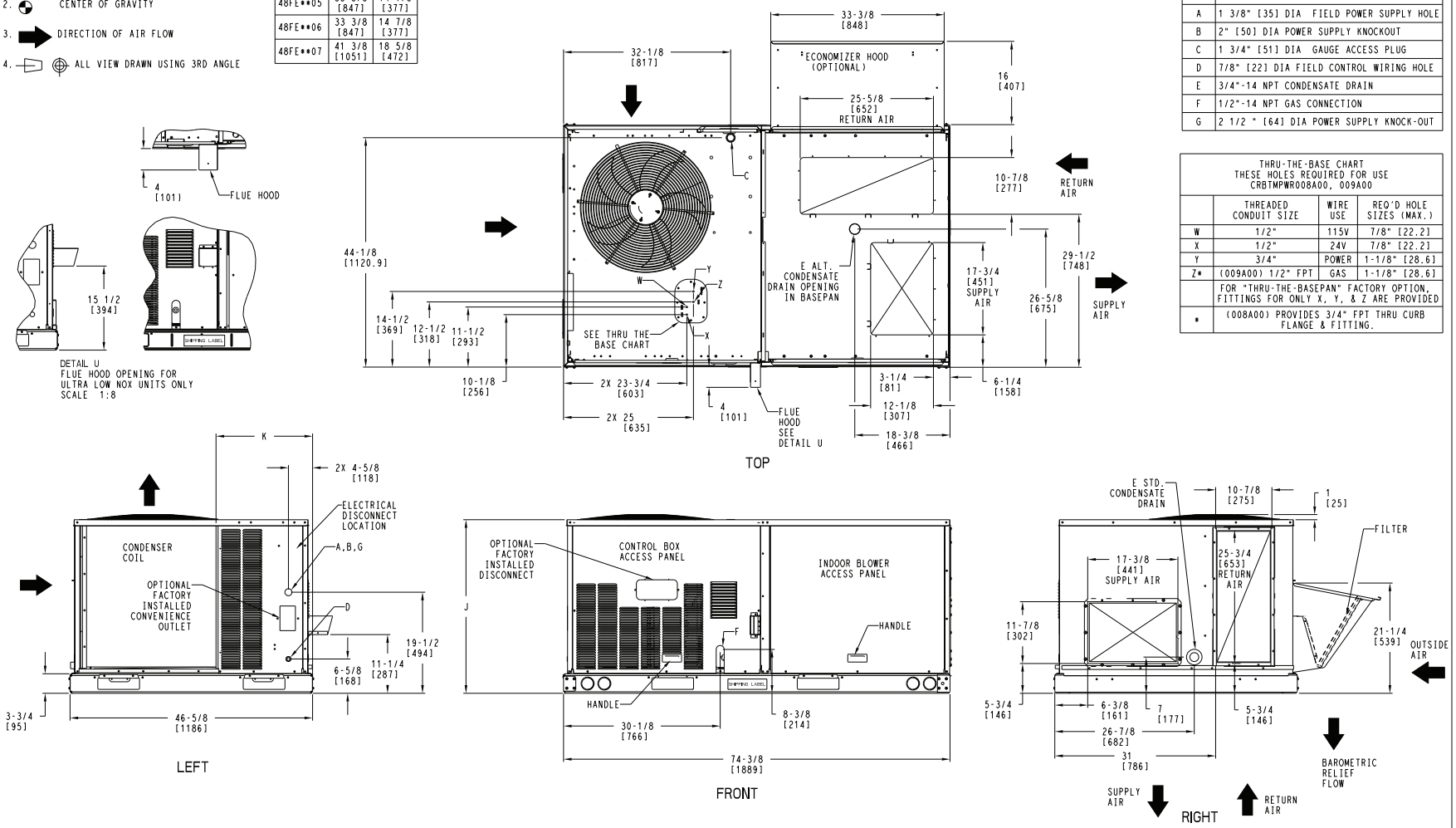

ITC CLASSIFICATION	SHEET	DATE	SUPERCEDES			REV
U.S. ECCN:NSR	1 OF 3	11/17/23	-	48FE 04-07 SINGLE PACKAGE ELECTRICAL COOLING WITH GAS HEAT	48TC006964	-

48FE**04-07 Base Unit Dimensions (cont)

Carrier | THIS DOCUMENT IS THE PROPERTY OF CARRIER CORPORATION AND IS DELIVERED UPON THE EXPRESS CONDITION THAT THE CONTENTS WILL NOT BE DISCLOSED OR USED WITHOUT CARRIER CORPORATION'S WRITTEN CONSENT. | SUBMISSION OF THESE DRAWINGS OR DOCUMENTS DOES NOT CONSTITUTE PART PERFORMANCE OR ACCEPTANCE OF CONTRACT.

UNIT	STD. UNIT WEIGHT *		CORNER WEIGHT (A)		CORNER WEIGHT (B)		CORNER WEIGHT (C)		CORNER WEIGHT (D)		C.G.		HEIGHT
	LBS.	KG.	LBS.	KG.	LBS.	KG.	LBS.	KG.	LBS.	KG.	X	Y	Z
48FE**04	482	219	113	51	116	53	128	58	125	57	37 5/8 [956]	24 9/16 [624]	18 1/4 [464]
48FE**05	543	246	138	63	133	60	133	60	138	63	36 1/2 [927]	23 3/8 [594]	18 [457]
48FE**06	556	252	142	64	136	62	136	62	142	64	36 1/2 [927]	23 3/8 [594]	18 [457]
48FE**07	607	275	162	73	152	69	141	64	151	68	36 [914]	22 1/2 [572]	19 3/8 [492]

* STANDARD UNIT WEIGHT IS WITH LOW GAS HEAT AND WITHOUT PACKAGING.
FOR OTHER OPTIONS AND ACCESSORIES, REFER TO THE PRODUCT DATA CATALOG.

THIS TABLE IS FOR "ULTRA LOW NOX" UNITS ONLY

UNIT	STD. UNIT WEIGHT**		CORNER WEIGHT (A)		CORNER WEIGHT (B)		CORNER WEIGHT (C)		CORNER WEIGHT (D)		C.G.		HEIGHT
	LBS.	KG.	LBS.	KG.	LBS.	KG.	LBS.	KG.	LBS.	KG.	X	Y	Z
48FEG*04	512	233	120	55	122	55	136	62	134	61	37 1/2 [953]	24 11/16 [627]	18 1/8 [460]
48FEG*05	573	260	146	66	139	63	141	64	147	67	36 3/8 [924]	23 1/2 [597]	18 [457]
48FEG*06	586	266	149	68	143	65	144	65	151	69	36 3/8 [924]	23 1/2 [597]	18 [457]

** STANDARD UNIT WEIGHT IS WITH WITHOUT PACKAGING.
FOR OTHER OPTIONS AND ACCESSORIES, REFER TO THE PRODUCT DATA CATALOG.

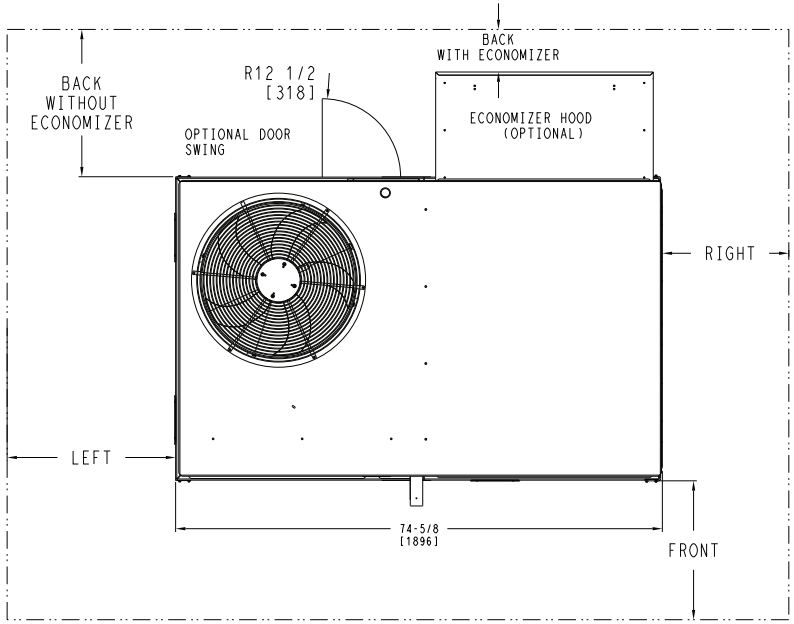

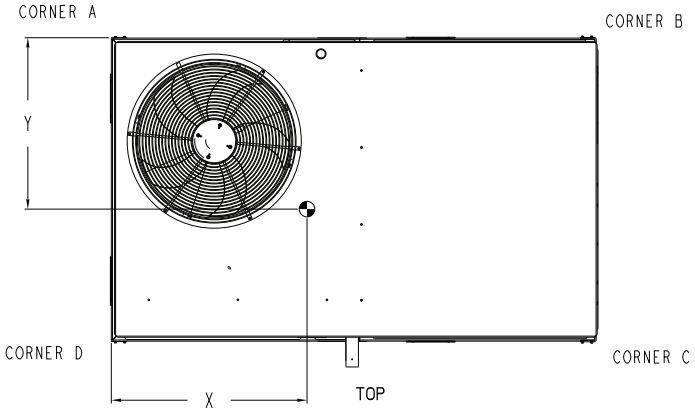

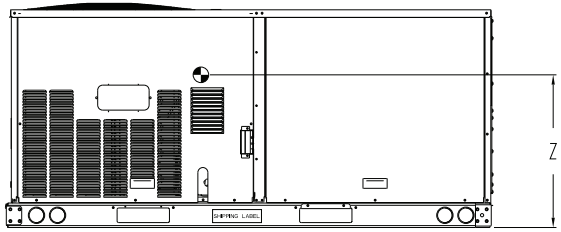

NOTES:

1. FOR ALL MINIMUM CLEARANCES LOCAL CODES OR JURISDICTIONS MAY PREVAIL.

CLEARANCE			
	SERVICE WITH:	SERVICE WITH:	OPERATING
SURFACE	CONDUCTIVE BARRIER	NONCONDUCTIVE BARRIER	CLEARANCE
FRONT	48 [1219mm]	36 [914mm]	18 [457mm]
LEFT	48 [1219mm]	42 [1067mm]	18 [457mm]
BACK W/O HOOD	48 [1219mm]	42 [1067mm]	18 [457mm]
BACK W/HOOD	36 [914mm]	36 [914mm]	18 [457mm]
RIGHT	36 [914mm]	36 [914mm]	18 [457mm]
TOP	72 [1829mm]	72 [1829mm]	72 [1829mm]

ITC CLASSIFICATION	SHEET	DATE	SUPERCEDES			REV
U.S. ECCN:NSR	2 OF 3	11/17/23	-	48FE 04-07 SINGLE PACKAGE ELECTRICAL COOLING WITH GAS HEAT	48TC006964	-

48FE**04-07 Base Unit Dimensions (cont)

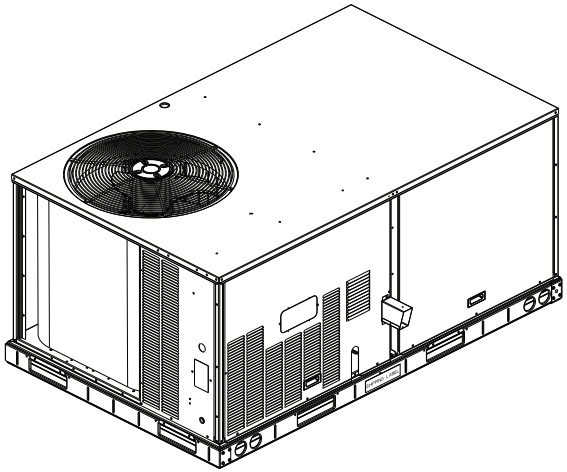

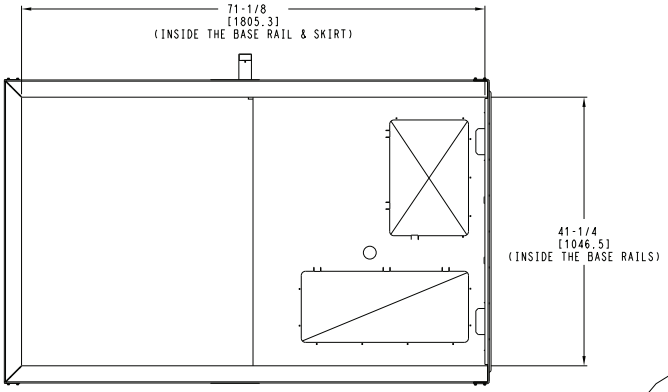

INSIDE BASERAIL DIMENSIONS

BOTTOM

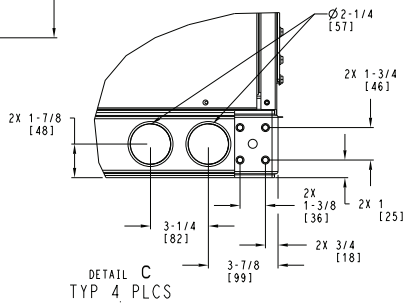

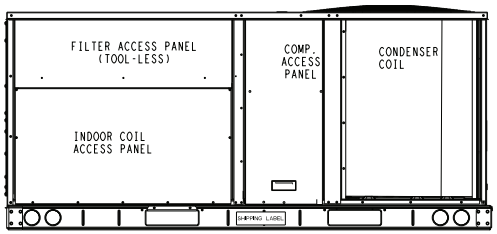

BACK

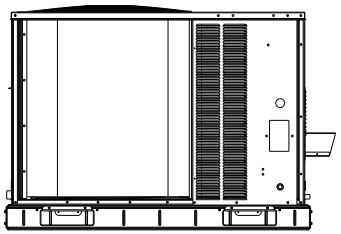

LEFT

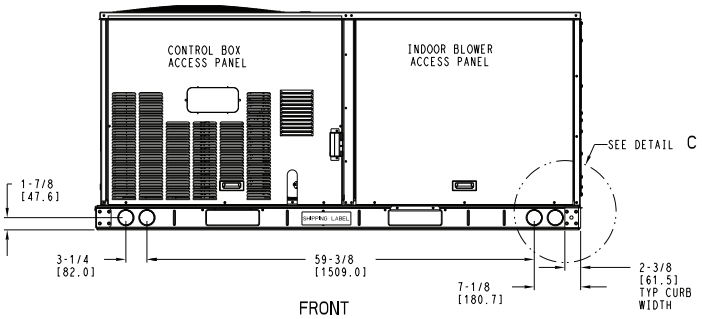

FRONT

ITC CLASSIFICATION	SHEET	DATE	SUPERCEDES			
U.S. ECCN:NSR	3 OF 3	11/17/23	-	48FE 04-07 SINGLE PACKAGE ELECTRICAL COOLING WITH GAS HEAT	48TC006964	REV -

THIS DOCUMENT IS THE PROPERTY OF CARRIER CORPORATION AND IS DELIVERED UPON THE EXPRESS CONDITION THAT THE CONTENTS WILL NOT BE DISCLOSED OR USED WITHOUT CARRIER CORPORATION'S WRITTEN CONSENT.

SUBMISSION OF THESE DRAWINGS OR DOCUMENTS DOES NOT CONSTITUTE PART PERFORMANCE OR ACCEPTANCE OF CONTRACT.

Base unit dimensions (cont)

50FE-*04-07 Base Unit Dimensions

NOTES:

1. DIMENSIONS ARE IN INCHES, DIMENSIONS IN [ ] ARE IN MILLIMETERS.
2. CENTER OF GRAVITY
3. DIRECTION OF AIR FLOW
4. ALL VIEW DRAWN USING 3RD ANGLE

UNIT	J	K
50FE**04	33 3/8 [847]	18 5/8 [472]
50FE**05	33 3/8 [847]	14 7/8 [377]
50FE**06	33 3/8 [847]	14 7/8 [377]
50FE**07	41 3/8 [1051]	18 5/8 [472]

Carrier THIS DOCUMENT IS THE PROPERTY OF CARRIER CORPORATION AND IS DELIVERED UPON THE EXPRESS CONDITION THAT THE CONTENTS WILL NOT BE DISCLOSED OR USED WITHOUT CARRIER CORPORATION'S WRITTEN CONSENT. SUBMISSION OF THESE DRAWINGS OR DOCUMENTS DOES NOT CONSTITUTE PART PERFORMANCE OR ACCEPTANCE OF CONTRACT.

	CONNECTION SIZES
A	1 3/8" [35] DIA FIELD POWER SUPPLY HOLE
B	2" [51] DIA POWER SUPPLY KNOCKOUT
C	1 3/4" [44] DIA GAUGE ACCESS PLUG
D	7/8" [22] DIA FIELD CONTROL WIRING HOLE
E	3/4"-14 NPT CONDENSATE DRAIN
G	2 1/2 " [64] DIA POWER SUPPLY KNOCK-OUT

THRU-THE-BASE CHART
THESE HOLES REQUIRED FOR USE
CRBTMPWR008A00, 009A00

	THREADED CONDUIT SIZE	WIRE USE	REQ'D HOLE SIZES (MAX.)
W	1/2"	115V	7/8" [22.2]
X	1/2"	24V	7/8" [22.2]
Y *	3/4"	POWER	1 1/8" [28.6]
Z**	(009A00) 1/2" FPT	GAS	1 1/8" [28.6]
	FOR "THRU-THE-BASEPAN" FACTORY OPTION, FITTINGS FOR ONLY X,Y, & Z ARE PROVIDED		
*	SELECT EITHER 3/4" OR 1/2" FOR POWER, DEPENDING ON WIRE SIZE		
**	(008A00) PROVIDES 3/4" FPT THRU CURB FLANGE & FITTING.		

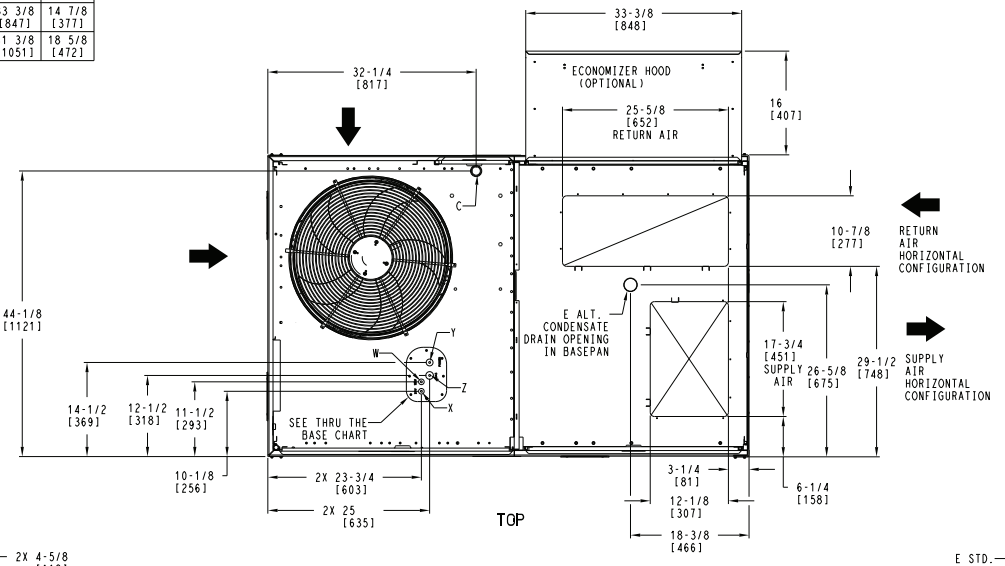

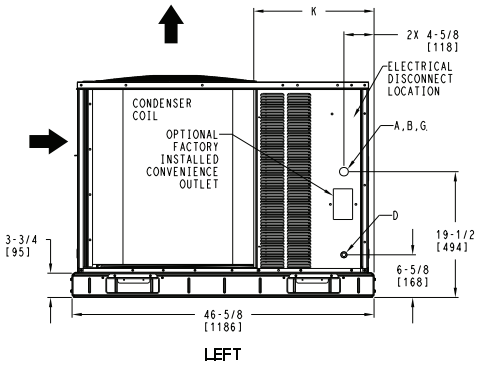

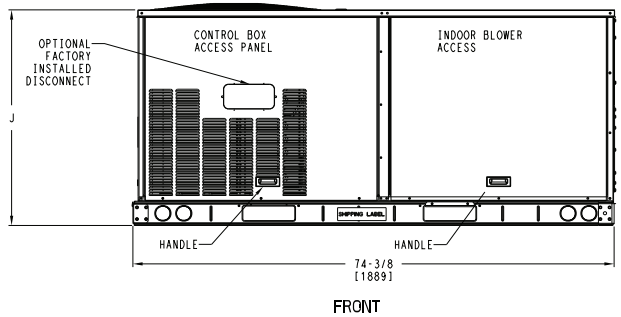

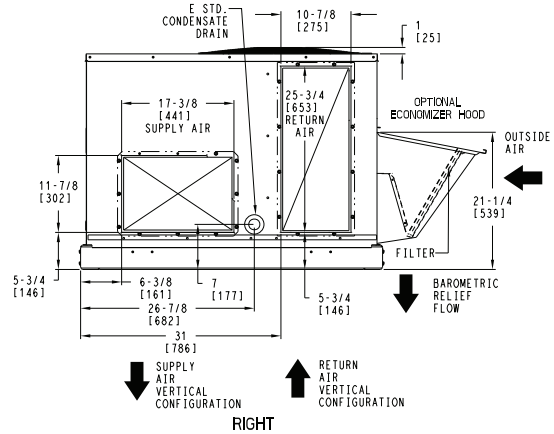

ITC CLASSIFICATION	SHEET	DATE	SUPERCEDES			REV
U.S. ECCN:NSR	1 OF 3	11/20/23	-	50FE 04-07 SINGLE PACKAGE ELECTRICAL COOLING WITH ELECTRIC HEAT	48TC006965	-

50FE-*04-07 Base Unit Dimensions (cont)

UNIT	STD. UNIT WEIGHT*		CORNER WEIGHT (A)		CORNER WEIGHT (B)		CORNER WEIGHT (C)		CORNER WEIGHT (D)		C.G.		HEIGHT
	LBS.	KG.	LBS.	KG.	LBS.	KG.	LBS.	KG.	LBS.	KG.	X	Y	Z
50FE**04	437	198	110	50	107	49	108	49	112	51	36 5/8 [930]	23 9/16 [598]	18 1/2 [470]
50FE**05	498	226	136	62	124	56	114	52	125	57	35 1/2 [902]	22 3/8 [568]	18 1/4 [464]
50FE**06	511	232	139	63	127	58	117	53	128	58	35 1/2 [902]	22 3/8 [568]	18 1/4 [464]
50FE**07	562	255	154	70	137	62	127	58	143	65	35 [889]	22 1/2 [572]	19 1/2 [495]

* STANDARD UNIT WEIGHT IS WITHOUT ELECTRIC HEAT AND WITHOUT PACKAGING.
FOR OTHER OPTIONS AND ACCESSORIES, REFER TO THE PRODUCT DATA CATALOG.

Carrier
THIS DOCUMENT IS THE PROPERTY OF CARRIER CORPORATION AND IS DELIVERED UPON THE EXPRESS CONDITION THAT THE CONTENTS WILL NOT BE DISCLOSED OR USED WITHOUT CARRIER CORPORATION'S WRITTEN CONSENT.
SUBMISSION OF THESE DRAWINGS OR DOCUMENTS DOES NOT CONSTITUTE PART PERFORMANCE OR ACCEPTANCE OF CONTRACT.

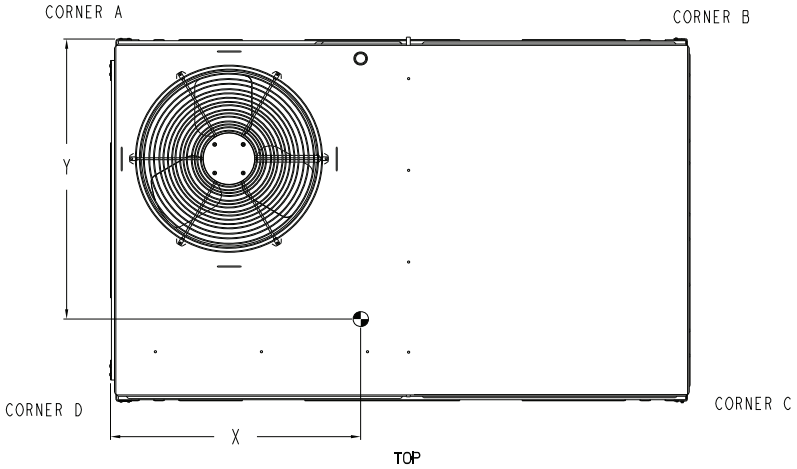

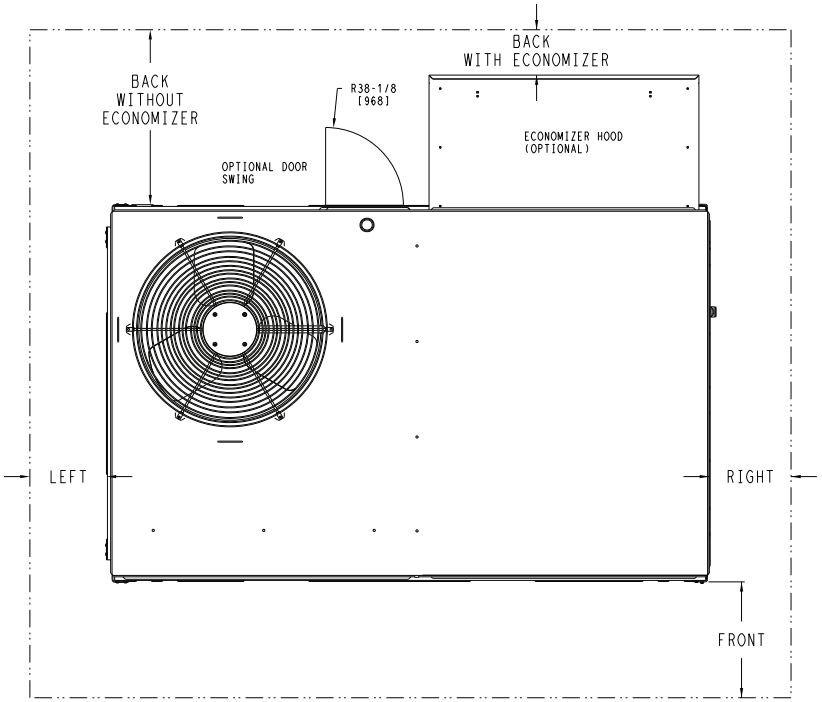

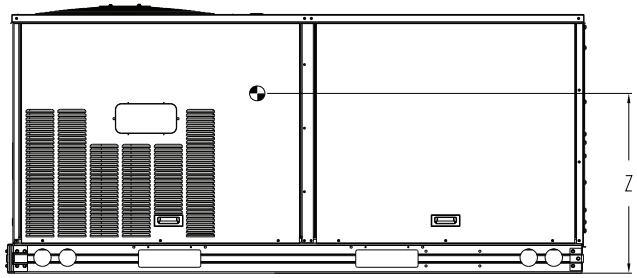

NOTE:

1. FOR ALL MINIMUM CLEARANCES LOCAL CODES OR JURISDICTIONS MAY PREVAIL.

CLEARANCE			
	SERVICE WITH:	SERVICE WITH:	OPERATING
SURFACE	CONDUCTIVE BARRIER	NONCONDUCTIVE BARRIER	CLEARANCE
FRONT	48 [1219mm]	36 [914mm]	18 [457mm]
LEFT	48 [1219mm]	42 [1067mm]	18 [457mm]
BACK W/O HOOD	48 [1219mm]	42 [1067mm]	18 [457mm]
BACK W/ HOOD	36 [914mm]	36 [914mm]	18 [457mm]
RIGHT	36 [914mm]	36 [914mm]	18 [457mm]
TOP	72 [1829mm]	72 [1829mm]	72 [1829mm]

ITC CLASSIFICATION	SHEET	DATE	SUPERCEDES			REV
U.S. ECCN:NSR	2 OF 3	11/20/23	-	50FE 04-07 SINGLE PACKAGE ELECTRICAL COOLING WITH ELECTRIC HEAT	48TC006965	-

50FE-*04-07 Base Unit Dimensions (cont)

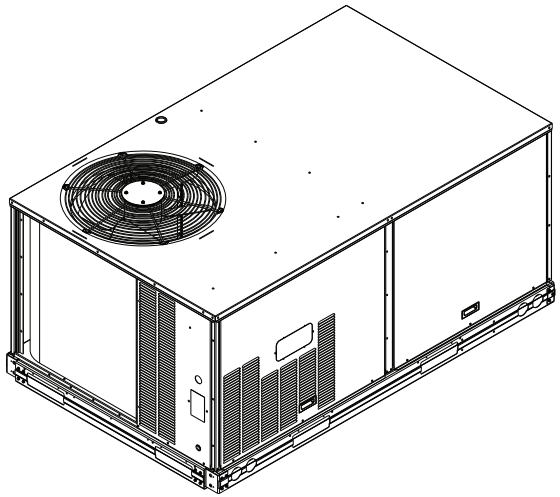

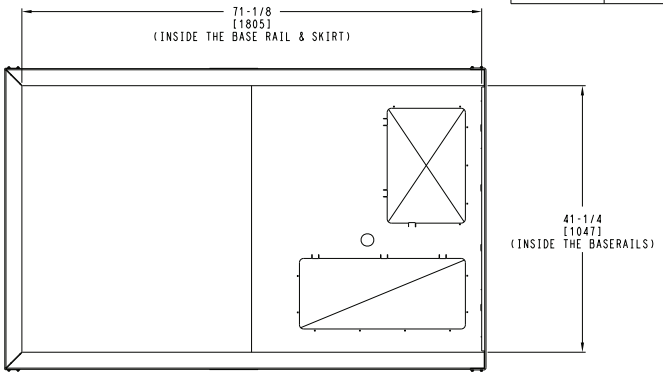

INSIDE BASERAIL DIMENSIONS

BOTTOM

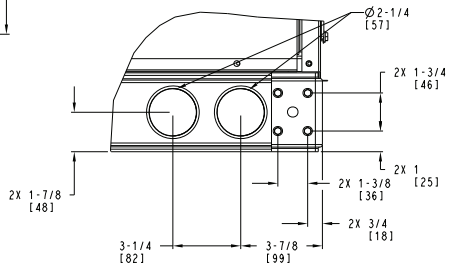

DETAIL C
TYP 4 PLCS

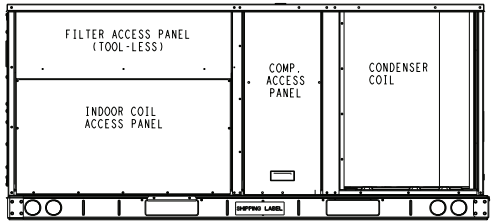

BACK

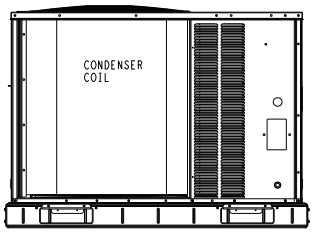

LEFT

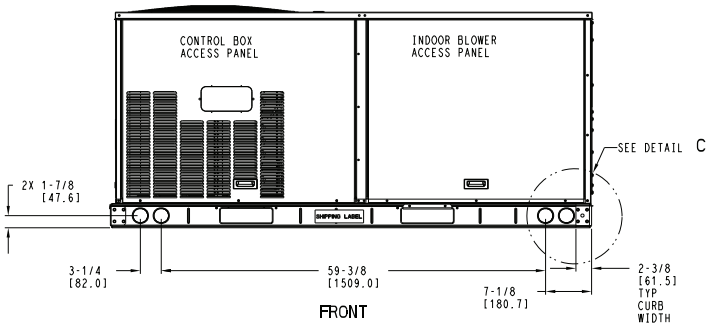

FRONT

ITC CLASSIFICATION	SHEET	DATE	SUPERCEDES			REV
U.S. ECCN:NSR	3 OF 3	11/20/23	-	50FE 04-07 SINGLE PACKAGE ELECTRICAL COOLING WITH ELECTRIC HEAT	48TC006965	-

Roof Curb Dimensions — 48/50FE 04-07

ROOF CURB ACCESSORY #	A
CRRFCURB001A01	14" [356]
CRRFCURB002A01	24" [610]

NOTES:
1. ROOFCURB ACCESSORY IS SHIPPED DISASSEMBLED.
2. INSULATED PANELS: 25.4 [1"] THK. POLYURETHANE FOAM, 44.5 [1-3/4] # DENSITY.
3. DIMENSIONS IN [ ] ARE IN MILLIMETERS.
4. ROOFCURB: 18 GAGE STEEL.
5. ATTACH DUCTWORK TO CURB. (FLANGES OF DUCT REST ON CURB).
6. SERVICE CLEARANCE 4 FEET ON EACH SIDE.
7. ▨ DIRECTION OF AIR FLOW.
8. CONNECTOR PACKAGE CRBTMPWR001A01 IS FOR THRU-THE-CURB GAS TYPE
   PACKAGE CRBTMPWR003A01 IS FOR THRU-THE-BOTTOM TYPE GAS CONNECTIONS.

CONNECTOR PKG. ACC.	GAS CONNECTION TYPE	GAS FITTING	POWER WIRING FITTING	CONTROL WIRING FITTING	ACCESSORY CONVENIENCE OUTLET WIRING CONNECTOR
CRBTMPWR001A01	THRU THE CURB	3/4" [19] NPT	3/4" [19] NPT	1/2" [12.7] NPT	1/2" [12.7] NPT
CRBTMPWR003A01	THRU THE BOTTOM	1/2" [12.7] NPT			

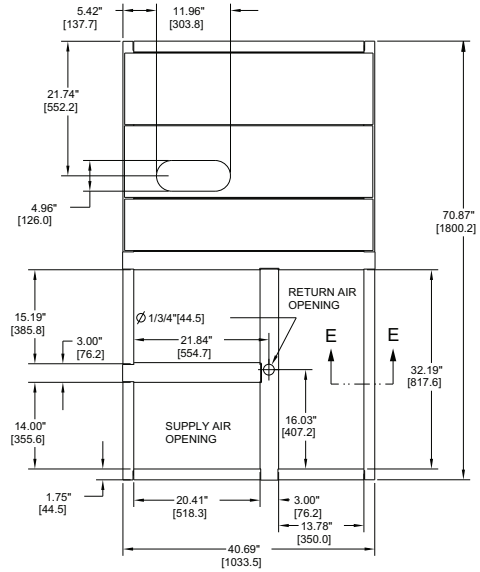

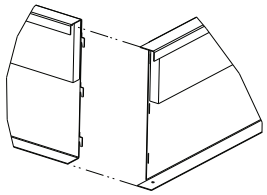

VIEW "B"
CORNER DETAIL

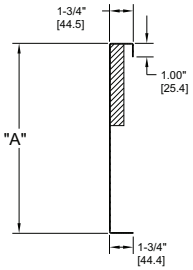

SECTION E-E
SCALE 0.250

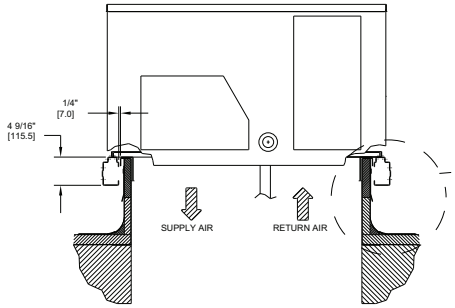

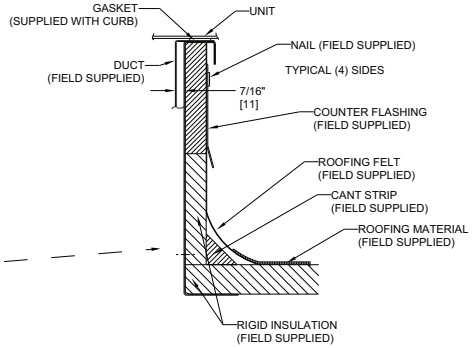

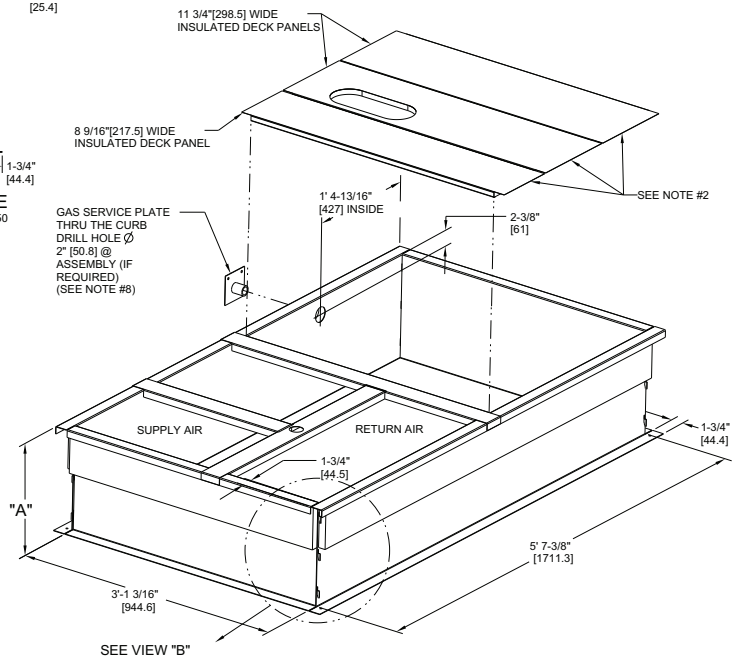

CERTIFIED DRAWING

REV	REVISION RECORD	DATE	BY	CHK'D	APP'D	ECN NO.
A	OVERALL DIM. 5'-7 3/8" WAS 5'-7 7/8; 18GA MATERIAL WA 16 GA.; NAIL FIELD SUPPLIED WAS WITH CURB	04/22/13	MMC	-	-	1067898

DRAWING RELEASE LEVEL: PRODUCTION			
THIRD ANGLE PROJECTION	UNLESS OTHERWISE SPECIFIED DIMENSIONS ARE IN INCHES TOLERANCES ON: 1 DEC ± - 2 DEC ± - 3 DEC ± - ANG ± -		
MATERIAL - - -	AUTHORIZATION NUMBER 1041738	TITLE CURB ASY, ROOF	
ENGINEERING REQUIREMENTS T-005, Y-002	ENGINEERING - - MANUFACTURING - -	SIZE D	DRAWING NUMBER 48TC400427 SHEET 5 OF 5 / REV B
WEIGHT: -	DRAFTER MMC 06/17/11 CHECKER - -		
SURFACE FINISH - / MFG/PURCH PURCH	MODEL (INTERNAL USE ONLY)	NEXT DRAWING - / SCALE N/A	DISTRIBUTION MMC

48/50FE*A04 Single Stage Cooling Capacities[a,b]

48/50FE*A04				AMBIENT TEMPERATURE (°F)											
				85			95			105			115		
				EA (db)			EA (db)			EA (db)			EA (db)		
				75	80	85	75	80	85	75	80	85	75	80	85
900 cfm	EA (wb)	58	TC	30.4	30.4	32.0	27.8	27.8	31.7	25.8	25.8	29.4	23.5	23.5	26.9
			SHC	24.9	28.4	32.0	24.0.	27.8	31.7	22.2	25.8	29.4	20.1	23.5	26.9
		62	TC	32.4	32.4	32.4	29.8	29.8	30.4	26.9	26.9	28.8	24.1	24.1	27.1
			SHC	23.3	27.5	31.8	21.8	26.1	30.4	20.3	24.5	28.8	18.7	22.9	27.1
		67	TC	36.1	36.1	36.1	34.0	34.0	34.0	31.2	31.2	31.2	28.1	28.1	28.1
			SHC	19.0	23.0	27.0	18.0.	22.1	26.3	16.5	20.7	24.9	15.0	19.3	23.5
		72	TC	39.5	39.5	39.5	37.8	37.8	37.8	35.4	35.4	35.4	32.7	32.7	32.7
			SHC	15.0	18.6	22.2	14.0	17.8	21.6	12.7	16.6	20.5	11.4	15.4	19.4
		76	TC	—	41.6	41.6	—	40.5	40.5	—	38.5	38.5	—	35.8	35.8
			SHC	—	15.1	20.0	—	14.3	19.3	—	13.1	18.0	—	11.9	16.9
1050 cfm	EA (wb)	58	TC	31.9	31.9	36.1	29.8	29.8	33.9	27.6	27.6	31.5	25.3	25.3	28.9
			SHC	27.6	31.9	36.1	25.8	29.8	33.9	23.8	27.6	31.5	21.7	25.3	28.9
		62	TC	33.6	33.6	34.9	31.0	31.0	33.5	28.2	28.2	31.8	25.3	25.3	30.1
			SHC	25.1	30.0	34.9	23.7	28.6	33.5	22.1	27.0	31.8	20.5	25.3	30.1
		67	TC	37.3	37.3	37.3	35.1	35.1	35.1	32.5	32.5	32.5	29.2	29.2	29.2
			SHC	20.1	24.7	29.2	19.1	23.9	28.6	17.9	22.8	27.7	16.3	21.2	26.1
		72	TC	40.4	40.4	40.4	38.8	38.8	38.8	36.4	36.4	36.4	33.7	33.7	33.7
			SHC	15.3	19.4	23.5	14.4	18.8	23.2	13.2	17.7	22.3	11.9	16.5	21.2
		76	TC	—	42.5	42.5	—	41.3	41.3	—	39.3	39.3	—	36.8	36.8
			SHC	—	15.4	21.2	—	14.8	20.5	—	13.8	19.6	—	12.6	16.6
1200 cfm	EA (wb)	58	TC	33.5	33.5	38.0	31.5	31.5	35.8	29.2	29.2	33.3	26.8	26.8	30.6
			SHC	29.1	33.5	38.0	27.3	31.5	35.8	25.2	29.2	33.3	23.0	26.8	30.6
		62	TC	34.6	34.6	37.7	32.2	32.2	36.3	29.4	29.4	33.6	26.9	26.9	31.0
			SHC	26.9	32.3	37.7	25.5	30.9	36.3	23.3	28.5	33.6	21.4	26.2	31.0
		67	TC	38.2	38.2	38.2	36.0	36.0	36.0	33.4	33.4	33.4	30.0	30.0	30.0
			SHC	21.1	26.2	31.2	20.2	25.5	30.8	19.1	24.6	30.2	17.5	23.1	28.6
		72	TC	40.9	40.9	40.9	39.6	39.6	39.6	37.3	37.3	37.3	34.5	34.5	34.5
			SHC	15.5	20.0	24.5	14.7	19.6	24.5	13.6	18.7	23.8	12.3	17.6	22.9
		76	TC	—	43.1	43.1	—	41.8	41.8	—	40.1	40.1	—	37.5	37.5
			SHC	—	15.6	22.2	—	15.1	19.3	—	14.3	19.0	—	13.2	18.0
1350 cfm	EA (wb)	58	TC	34.9	34.9	39.5	33.0	33.0	37.4	30.6	30.6	34.8	28.1	28.1	32.0
			SHC	30.3	34.9	39.5	28.6	33.0	37.4	26.4	30.6	34.8	24.2	28.1	32.0
		62	TC	35.4	35.4	39.7	33.4	33.4	38.2	31.2	31.2	34.6	28.1	28.1	33.3
			SHC	28.1	33.9	39.7	26.8	32.5	38.2	24.3	29.5	34.6	22.9	28.1	33.3
		67	TC	38.9	38.9	38.9	36.7	36.7	36.7	34.1	34.1	34.1	30.7	30.7	31.0
			SHC	21.9	27.4	33.0	21.2	27.0	32.8	20.2	26.3	32.3	18.7	24.9	31.0
		72	TC	41.5	41.5	41.5	40.2	40.2	40.2	38.0	38.0	38.0	35.1	35.1	35.1
			SHC	15.8	20.7	25.5	15.0	20.4	25.7	14.0	19.6	25.2	12.7	18.5	24.4
		76	TC	—	43.6	43.6	—	42.1	42.1	—	40.6	40.6	—	38.1	38.1
			SHC	—	16.0	23.4	—	15.3	20.1	—	14.7	19.9	—	13.6	19.1
1500 cfm	EA (wb)	58	TC	36.0	36.0	40.7	34.1	34.1	38.7	31.9	31.9	36.2	29.2	29.2	33.2
			SHC	31.2	36.0	40.7	29.6	34.1	38.7	27.5	31.9	36.2	25.1	29.2	33.2
		62	TC	36.8	36.8	39.6	34.2	34.2	40.3	31.2	31.2	37.7	29.2	29.2	34.6
			SHC	28.4	34.0	39.6	28.1	34.2	40.3	24.8	31.2	37.7	23.8	29.2	34.6
		67	TC	39.4	39.4	39.4	37.3	37.3	37.3	34.6	34.6	34.6	31.3	31.3	33.4
			SHC	22.6	28.6	34.5	21.9	28.2	34.5	21.2	27.8	34.5	19.9	26.7	33.4
		72	TC	42.0	42.0	42.0	40.7	40.7	40.7	38.5	38.5	38.5	35.6	35.6	35.6
			SHC	15.9	21.2	26.4	15.2	21.0	26.8	14.2	20.3	26.5	13.0	19.4	25.8
		76	TC	—	44.0	44.0	—	42.5	42.5	—	41.1	41.1	—	38.5	38.5
			SHC	—	16.2	21.2	—	15.5	20.7	—	14.9	20.7	—	13.9	19.9

NOTE(S):

a. See minimum-maximum airflow ratings on page 9.
b. Published capacity values are based on SEER2 static requirements.

LEGEND

— — Do Not Operate
cfm — Cubic Feet Per Minute (Supply Air)
EA (db) — Entering Air Temperature (dry bulb)
EA (wb) — Entering Air Temperature (wet bulb)
SHC — Sensible Heat Capacity (1000 Btuh) Gross
TC — Total Capacity (1000 Btuh) Gross

48/50FE*B04 — Unit with Humidi-MiZer® System in Subcooling Mode — Cooling Capacities[a]

TEMP (°F) AIR ENTERING CONDENSER (Edb)		AIR ENTERING EVAPORATOR — SCFM/BF								
		900 / 0.01			1200 / 0.02			1500 / 0.04		
		Air Entering Evaporator — Ewb (°F)								
		72	67	62	72	67	62	72	67	62
75	TC	34.11	38.41	40.13	34.27	36.95	37.77	38.26	35.36	31.22
	SHC	33.96	20.21	4.34	24.30	19.78	14.92	13.58	17.65	21.22
	kW	3.13	2.99	2.94	2.82	2.74	2.68	3.09	3.01	2.88
85	TC	16.51	30.88	46.31	30.26	35.29	40.58	35.93	30.44	25.33
	SHC	24.05	14.60	5.25	21.77	18.79	15.68	11.33	14.25	17.13
	kW	3.47	3.19	3.01	3.22	3.01	2.84	3.39	3.18	2.99
95	TC	30.43	35.10	36.83	30.96	33.64	34.46	34.96	32.06	27.91
	SHC	31.80	18.23	2.35	22.31	17.79	12.93	11.59	15.66	19.23
	kW	3.66	3.53	3.48	3.36	3.28	3.22	3.63	3.55	3.42
105	TC	13.20	27.58	43.00	26.95	31.99	37.27	32.62	27.13	22.02
	SHC	22.06	12.61	3.25	19.78	16.80	13.69	9.33	12.26	15.14
	kW	4.01	3.72	3.55	3.76	3.55	3.38	3.93	3.72	3.53
115	TC	27.12	31.79	33.52	27.65	30.33	31.15	31.65	28.75	24.61
	SHC	29.81	16.23	0.36	20.32	15.80	10.94	9.60	13.67	17.23
	kW	4.20	4.07	4.02	3.90	3.82	3.76	4.17	4.09	3.96

NOTE(S):

a. Published capacity values are based on SEER2 static requirements.

48/50FE*B04 — Unit with Humidi-MiZer System in Hot Gas Reheat Mode — Cooling Capacities[a]

TEMP (°F) AIR ENTERING CONDENSER (Edb)		AIR ENTERING EVAPORATOR — Ewb (°F)								
		75 Dry Bulb 62.5 Wet Bulb (50% Relative)			75 Dry Bulb 64 Wet Bulb (56% Relative)			75 Dry Bulb 65.3 Wet Bulb (60% Relative)		
		Air Entering Evaporator — Cfm								
		900	1200	1500	900	1200	1500	900	1200	1500
80	TC	11.85	12.53	12.78	12.40	13.06	13.31	12.87	13.51	13.77
	SHC	0.36	2.26	4.13	–1.28	0.18	1.67	–2.71	–1.61	–0.47
	kW	2.01	2.00	2.00	2.06	2.05	2.04	2.10	2.09	2.08
75	TC	12.70	13.42	13.69	13.27	13.96	14.23	13.71	14.41	14.69
	SHC	1.14	3.09	4.98	–0.48	1.01	2.53	–1.93	–0.79	0.39
	kW	1.99	1.98	1.98	2.04	2.03	2.02	2.08	2.07	2.06
70	TC	13.52	14.29	14.59	14.04	14.50	15.11	14.54	15.27	15.57
	SHC	1.92	3.89	5.82	0.22	1.40	3.35	–1.15	0.01	1.21
	kW	1.97	1.97	1.96	2.02	2.01	2.00	2.06	2.05	2.04
60	TC	15.10	15.94	16.28	15.65	16.46	16.80	16.09	16.90	17.25
	SHC	3.40	5.43	7.40	1.79	3.34	4.93	0.28	1.53	2.77
	kW	1.93	1.93	1.93	1.98	1.98	1.97	2.02	2.02	2.01
50	TC	16.56	17.47	17.85	17.08	18.00	18.38	17.61	18.47	18.84
	SHC	4.76	6.88	8.88	3.08	4.79	6.40	1.70	2.99	4.26
	kW	1.90	1.91	1.91	1.95	1.95	1.95	1.99	1.99	1.98
40	TC	18.01	18.99	19.40	18.51	19.53	19.95	19.08	20.00	20.42
	SHC	6.11	8.31	10.34	4.42	6.22	7.88	3.06	4.42	5.73
	kW	1.87	1.88	1.88	1.92	1.92	1.92	1.96	1.96	1.96

NOTE(S):

a. Published capacity values are based on SEER2 static requirements.

LEGEND

Edb — Entering Dry Bulb
Ewb — Entering Wet Bulb
kW — Compressor Power Input
SCFM/BF — Standard Cubic Feet per Minute/Bypass Factor
SHC — Sensible Heat Capacity (1000 Btuh) Gross
TC — Total Capacity (1000 Btuh) Gross

48/50FE*A05 Single Stage Cooling Capacities[a,b]

48/50FE*A05				AMBIENT TEMPERATURE (°F)											
				85			95			105			115		
				EA (db)			EA (db)			EA (db)			EA (db)		
				75	80	85	75	80	85	75	80	85	75	80	85
1200 cfm	EA (wb)	58	TC	43.1	43.1	49.0	40.2	40.2	45.8	—	—	—	—	—	—
			SHC	37.2	43.1	49.0	34.6	40.2	45.8	—	—	—	—	—	—
		62	TC	46.6	46.6	46.6	43.1	43.1	43.8	—	—	—	—	—	—
			SHC	33.4	39.7	46.0	31.2	37.5	43.8	—	—	—	—	—	—
		67	TC	52.3	52.3	52.3	49.0	49.0	49.0	44.9	44.9	44.9	40.1	40.1	40.1
			SHC	27.5	33.8	40.1	25.6	31.9	38.3	23.4	29.7	36.0	20.9	27.2	33.5
		72	TC	57.7	57.7	57.7	54.7	54.7	54.7	51.2	51.2	51.2	46.8	46.8	46.8
			SHC	21.2	27.5	33.8	19.5	25.8	32.2	17.6	24.0	30.3	15.4	21.7	28.1
		76	TC	—	61.4	61.4	—	58.6	58.6	—	55.4	55.4	—	51.9	51.9
			SHC	—	22.2	28.8	—	20.6	27.2	—	18.9	25.5	—	17.1	23.6
1400 cfm	EA (wb)	58	TC	46.3	46.3	52.6	43.3	43.3	49.3	39.8	39.8	45.5	—	—	—
			SHC	40.0	46.3	52.6	37.3	43.3	49.3	34.2	39.8	45.5	—	—	—
		62	TC	48.6	48.6	51.1	45.0	45.0	48.9	40.8	40.8	46.2	—	—	—
			SHC	36.5	43.8	51.1	34.4	41.6	48.9	31.9	39.0	46.2	—	—	—
		67	TC	54.2	54.2	54.2	50.9	50.9	50.9	47.0	47.0	47.0	41.9	41.9	41.9
			SHC	29.4	36.7	44.0	27.6	34.9	42.2	25.5	32.9	40.2	23.0	30.3	37.5
		72	TC	59.3	59.3	59.3	56.3	56.3	56.3	52.9	52.9	52.9	48.7	48.7	48.7
			SHC	22.0	29.1	36.3	20.3	27.5	34.7	18.5	25.8	33.1	16.4	23.8	31.1
		76	TC	—	62.7	62.7	—	59.9	59.9	—	56.6	56.6	—	53.2	53.2
			SHC	—	23.1	30.7	—	21.5	29.1	—	19.8	27.3	—	18.0	25.4
1600 cfm	EA (wb)	58	TC	49.0	49.0	55.6	46.0	46.0	52.3	42.4	42.4	48.4	38.5	38.5	44.0
			SHC	42.4	49.0	55.6	39.7	46.0	52.3	36.5	42.4	48.4	33.0	38.5	44.0
		62	TC	50.2	50.2	55.7	46.7	46.7	53.5	43.5	43.5	47.9	38.6	38.6	46.0
			SHC	39.3	47.5	55.7	37.2	45.4	53.5	33.4	40.6	47.9	31.1	38.6	46.0
		67	TC	55.6	55.6	55.6	52.3	52.3	52.3	48.5	48.5	48.5	43.2	43.2	43.2
			SHC	31.2	39.3	47.5	29.4	37.7	45.9	27.5	35.8	44.1	24.9	33.2	41.4
		72	TC	60.5	60.5	60.5	57.5	57.5	57.5	54.1	54.1	54.1	50.1	50.1	50.1
			SHC	22.6	30.5	38.4	20.9	29.0	37.0	19.2	27.3	35.5	17.2	25.5	33.9
		76	TC	—	63.7	63.7	—	60.9	60.9	—	57.6	57.6	—	54.1	54.1
			SHC	—	23.7	32.1	—	22.2	30.5	—	20.4	28.7	—	18.7	27.1
1800 cfm	EA (wb)	58	TC	51.2	51.2	58.0	48.3	48.3	54.8	44.7	44.7	50.9	40.6	40.6	46.4
			SHC	44.3	51.2	58.0	41.7	48.3	54.8	38.5	44.7	50.9	34.8	40.6	46.4
		62	TC	51.6	51.6	59.7	49.2	49.2	54.1	44.7	44.7	53.0	40.6	40.6	48.3
			SHC	41.8	50.8	59.7	38.1	46.1	54.1	36.4	44.7	53.0	32.9	40.6	48.3
		67	TC	56.7	56.7	56.7	53.4	53.4	53.4	49.6	49.6	49.6	44.3	44.3	45.1
			SHC	32.7	41.8	50.8	31.1	40.2	49.3	29.2	38.5	47.7	26.7	35.9	45.1
		72	TC	61.3	61.3	61.3	58.3	58.3	58.3	54.9	54.9	54.9	51.1	51.1	51.1
			SHC	23.1	31.7	40.3	21.5	30.3	39.1	19.7	28.7	37.7	17.9	27.1	36.3
		76	TC	—	64.4	64.4	—	61.6	61.6	—	58.3	58.3	—	54.8	54.8
			SHC	—	24.2	33.2	—	22.7	31.6	—	21.0	29.9	—	19.3	28.4
2000 cfm	EA (wb)	58	TC	53.0	53.0	60.0	50.1	50.1	56.9	46.7	46.7	53.2	42.4	42.4	48.4
			SHC	46.0	53.0	60.0	43.3	50.1	56.9	40.3	46.7	53.2	36.4	42.4	48.4
		62	TC	54.4	54.4	57.7	50.2	50.2	59.2	46.8	46.8	55.4	42.4	42.4	50.5
			SHC	41.3	49.5	57.7	41.1	50.2	59.2	38.2	46.8	55.4	34.4	42.4	50.5
		67	TC	57.5	57.5	57.5	54.3	54.3	54.3	50.4	50.4	51.1	45.3	45.3	48.7
			SHC	34.2	44.0.	53.8	32.6	42.6	52.5	30.9	41.0	51.1	28.5	38.6	48.7
		72	TC	62.0	62.0	62.0	59.0	59.0	59.0	55.6	55.6	55.6	51.8	51.8	51.8
			SHC	23.4	32.7	42.0	21.9	31.4	40.9	20.2	29.9	39.6	18.4	28.4	38.5
		76	TC	—	65.0	65.0	—	62.2	62.2	—	58.9	58.9	—	55.3	55.3
			SHC	—	24.5	34.0	—	23.0	32.6	—	21.3	31.0	—	19.7	29.4

NOTE(S):

a. See minimum-maximum airflow ratings on page 9.
b. Published capacity values are based on SEER2 static requirements.

LEGEND

— — Do Not Operate
cfm — Cubic Feet Per Minute (Supply Air)
EA (db) — Entering Air Temperature (dry bulb)
EA (wb) — Entering Air Temperature (wet bulb)
SHC — Sensible Heat Capacity (1000 Btuh) Gross
TC — Total Capacity (1000 Btuh) Gross

48/50FE*B05 — Unit with Humidi-MiZer® System in Subcooling Mode — Cooling Capacities[a]

TEMP (°F) AIR ENTERING CONDENSER (Edb)		AIR ENTERING EVAPORATOR — SCFM/BF								
		1200 / 0.04			1600 / 0.07			2000 / 0.10		
		Air Entering Evaporator — Ewb (°F)								
		72	67	62	72	67	62	72	67	62
75	TC	49.74	44.94	40.58	51.90	48.81	42.51	54.80	49.82	43.50
	SHC	20.80	26.22	31.65	29.75	25.13	43.61	26.80	35.16	16.70
	kW	2.50	2.47	2.44	4.03	4.06	4.09	2.53	2.50	2.53
85	TC	48.80	39.77	40.20	50.40	43.47	41.92	53.40	44.30	44.74
	SHC	17.29	24.04	28.65	25.72	22.81	40.42	22.88	32.69	39.87
	kW	2.53	2.51	2.48	4.07	4.09	4.12	2.56	2.53	2.51
95	TC	47.42	34.60	39.40	49.19	38.12	40.95	51.77	38.77	43.67
	SHC	13.40	21.87	25.30	22.02	20.49	36.91	18.78	30.21	36.26
	kW	2.57	2.54	2.52	4.11	4.13	4.16	2.60	2.57	2.55
105	TC	45.19	29.43	26.14	46.71	32.78	29.29	49.33	33.25	30.03
	SHC	8.71	19.70	26.16	17.11	18.18	25.97	13.90	27.73	36.70
	kW	4.52	2.58	2.57	2.92	4.17	4.19	4.55	2.61	2.59
115	TC	42.92	24.26	21.01	43.68	27.43	24.26	46.65	27.73	24.63
	SHC	4.05	17.53	24.01	11.67	15.86	23.94	8.85	25.25	34.25
	kW	5.41	2.62	2.61	3.81	4.21	4.22	5.43	2.64	2.63

NOTE(S):

a. Published capacity values are based on SEER2 static requirements.

48/50FE*B05 — Unit with Humidi-MiZer System in Hot Gas Reheat Mode — Cooling Capacities[a]

TEMP (°F) AIR ENTERING CONDENSER (Edb)		AIR ENTERING EVAPORATOR — Ewb (°F)								
		75 Dry Bulb 62.5 Wet Bulb (50% Relative)			75 Dry Bulb 64 Wet Bulb (56% Relative)			75 Dry Bulb 65.3 Wet Bulb (60% Relative)		
		Air Entering Evaporator — Cfm								
		1200	1600	2000	1200	1600	2000	1200	1600	2000
80	TC	11.65	11.44	11.20	13.18	12.98	12.73	13.47	13.26	12.88
	SHC	–3.80	–3.40	–2.95	7.77	8.17	8.61	–6.99	–6.98	–6.99
	kW	3.19	3.20	3.20	3.68	3.69	3.69	3.26	3.27	3.27
75	TC	13.89	13.76	13.47	13.54	13.41	13.12	15.39	15.37	15.03
	SHC	–1.54	–1.09	–0.76	6.74	7.19	7.51	–4.70	–4.51	–4.54
	kW	3.07	3.08	3.09	3.63	3.64	3.65	3.13	3.15	3.16
70	TC	15.98	15.88	15.60	16.91	16.82	16.53	17.40	17.12	16.67
	SHC	0.68	1.11	1.36	–1.25	–0.83	–0.57	–2.23	–2.21	–2.36
	kW	2.96	2.97	2.98	3.00	3.01	3.02	3.01	3.02	3.01
60	TC	19.24	19.18	18.82	17.30	17.24	16.88	20.43	19.98	24.36
	SHC	4.77	5.17	5.26	–2.20	–1.80	–1.71	2.67	2.62	4.24
	kW	3.21	3.26	3.18	2.90	2.96	2.88	3.26	2.97	3.02
50	TC	13.45	13.58	13.53	14.97	15.11	15.06	13.88	14.00	13.95
	SHC	7.82	7.54	7.16	3.56	3.29	2.91	7.06	6.66	6.19
	kW	3.04	3.10	3.15	3.40	3.47	3.51	3.10	3.17	3.21
40	TC	13.45	13.58	13.53	15.40	15.53	15.48	13.88	14.00	13.95
	SHC	7.82	7.54	7.16	2.59	2.31	1.93	7.06	6.66	6.19
	kW	3.14	3.23	3.15	3.33	3.42	3.34	3.22	3.31	3.01

NOTE(S):

a. Published capacity values are based on SEER2 static requirements.

LEGEND

Edb — Entering Dry Bulb
Ewb — Entering Wet Bulb
kW — Compressor Power Input
SCFM/BF — Standard Cubic Feet per Minute/Bypass Factor
SHC — Sensible Heat Capacity (1000 Btuh) Gross
TC — Total Capacity (1000 Btuh) Gross

48/50FE*A06 Single Stage Cooling Capacities[a,b]

48/50FE*A06				AMBIENT TEMPERATURE (°F)											
				85			95			105			115		
				EA (db)			EA (db)			EA (db)			EA (db)		
				75	80	85	75	80	85	75	80	85	75	80	85
1500 cfm	EA (wb)	58	TC	52.7	52.7	59.6	49.6	49.6	56.1	46.1	46.1	52.3	42.4	42.4	48.2
			SHC	45.7	52.7	59.6	43.0	49.6	56.1	40.0	46.1	52.3	36.7	42.4	48.2
		62	TC	56.1	56.1	56.6	52.2	52.2	54.8	47.7	47.7	52.4	42.8	42.8	49.7
			SHC	41.4	49.0	56.6	39.5	47.1	54.8	37.1	44.8	52.4	34.6	42.1	49.7
		67	TC	61.6	61.6	61.6	58.7	58.7	58.7	54.5	54.5	54.5	49.5	49.5	49.5
			SHC	33.7	40.8	48.0	32.5	40.0	47.4	30.6	38.1	45.7	28.3	35.9	43.5
		72	TC	66.5	66.5	66.5	64.6	64.6	64.6	60.9	60.9	60.9	56.4	56.4	56.4
			SHC	26.3	33.0	39.7	25.2	32.3	39.3	23.5	30.8	38.0	21.5	28.9	36.3
		76	TC	—	69.8	69.8	—	67.6	67.6	—	65.4	65.4	—	61.3	61.3
			SHC	—	26.8	35.0	—	25.6	33.9	—	24.6	30.5	—	23.0	29.8
1750 cfm	EA (wb)	58	TC	56.0	56.0	63.3	53.0	53.0	59.9	49.4	49.4	56.0	45.4	45.4	51.6
			SHC	48.7	56.0	63.3	46.0	53.0	59.9	42.8	49.4	56.0	39.3	45.4	51.6
		62	TC	58.1	58.1	62.1	54.2	54.2	60.5	49.8	49.8	57.7	46.4	46.4	50.7
			SHC	44.8	53.4	62.1	42.9	51.7	60.5	40.4	49.0	57.7	36.0	43.3	50.7
		67	TC	63.8	63.8	63.8	60.6	60.6	60.6	56.3	56.3	56.3	51.3	51.3	51.3
			SHC	35.9	44.1	52.3	34.7	43.2	51.8	32.8	41.5	50.2	30.6	39.4	48.2
		72	TC	67.9	67.9	67.9	66.0	66.0	66.0	62.6	62.6	62.6	58.0	58.0	58.0
			SHC	26.9	34.5	42.0	26.0	34.0	42.1	24.4	32.8	41.2	22.5	31.0	39.5
		76	TC	—	71.2	71.2	—	68.8	68.8	—	66.5	66.5	—	62.7	62.7
			SHC	—	27.4	37.0	—	26.5	33.6	—	25.6	33.4	—	24.1	32.1
2000 cfm	EA (wb)	58	TC	58.7	58.7	66.3	55.7	55.7	63.0	52.1	52.1	59.0	48.0	48.0	54.5
			SHC	51.1	58.7	66.3	48.4	55.7	63.0	45.2	52.1	59.0	41.6	48.0	54.5
		62	TC	59.7	59.7	67.0	56.8	56.8	63.2	52.5	52.5	60.5	48.1	48.1	56.7
			SHC	47.7	57.4	67.0	45.0	54.1	63.2	42.5	51.5	60.5	39.5	48.1	56.7
		67	TC	64.8	64.8	64.8	62.0	62.0	62.0	57.7	57.7	57.7	52.7	52.7	52.7
			SHC	37.3	46.3	55.2	36.6	46.2	55.8	34.9	44.7	54.5	32.8	42.7	52.7
		72	TC	69.0	69.0	69.0	66.7	66.7	66.7	63.8	63.8	63.8	59.2	59.2	59.2
			SHC	27.5	35.8	44.0	26.5	35.3	44.1	25.2	34.6	44.0	23.4	33.0	42.6
		76	TC	—	72.2	72.2	—	69.7	69.7	—	67.3	67.3	—	63.6	63.6
			SHC	—	28.3	36.2	—	27.2	35.4	—	26.4	35.3	—	25.0	34.2
2250 cfm	EA (wb)	58	TC	60.9	60.9	68.8	57.9	57.9	65.5	54.4	54.4	61.5	50.2	50.2	56.9
			SHC	53.0	60.9	68.8	50.3	57.9	65.5	47.2	54.4	61.5	43.5	50.2	56.9
		62	TC	61.8	61.8	70.1	58.7	58.7	66.2	54.4	54.4	64.0	50.3	50.3	59.3
			SHC	49.8	60.0	70.1	47.0	56.6	66.2	44.8	54.4	64.0	41.3	50.3	59.3
		67	TC	65.6	65.6	65.6	63.1	63.1	63.1	58.8	58.8	58.8	53.6	53.6	56.9
			SHC	38.6	48.4	58.1	38.4	48.9	59.5	36.8	47.7	58.6	34.7	45.8	56.9
		72	TC	69.7	69.7	69.7	67.3	67.3	67.3	64.8	64.8	64.8	60.2	60.2	60.2
			SHC	28.0	36.9	45.8	26.9	36.4	45.8	26.0	36.3	46.6	24.1	34.8	45.4
		76	TC	—	73.0	73.0	—	70.4	70.4	—	67.8	67.8	—	64.4	64.4
			SHC	—	29.1	37.9	—	28.0	37.0	—	27.1	36.7	—	25.9	36.1
2500 cfm	EA (wb)	58	TC	62.6	62.6	70.7	59.8	59.8	67.6	56.2	56.2	63.7	52.1	52.1	59.1
			SHC	54.5	62.6	70.7	52.0	59.8	67.6	48.8	56.2	63.7	45.2	52.1	59.1
		62	TC	64.3	64.3	69.0	59.9	59.9	70.3	56.3	56.3	66.2	52.2	52.2	61.5
			SHC	49.8	59.4	69.0	49.4	59.9	70.3	46.4	56.3	66.2	42.9	52.2	61.5
		67	TC	66.3	66.3	66.3	63.9	63.9	63.9	59.7	59.7	62.4	54.4	54.4	60.8
			SHC	39.9	50.4	60.8	40.0	51.5	63.0	38.6	50.5	62.4	36.6	48.7	60.8
		72	TC	70.4	70.4	70.4	67.9	67.9	67.9	65.3	65.3	65.3	60.9	60.9	60.9
			SHC	28.5	38.1	47.6	27.4	37.6	47.7	26.6	37.7	48.9	24.9	36.5	48.1
		76	TC	—	73.6	73.6	—	70.9	70.9	—	68.1	68.1	—	64.9	64.9
			SHC	—	29.8	39.4	—	28.6	38.5	—	27.6	37.8	—	26.7	37.8

NOTE(S):

a. See minimum-maximum airflow ratings on page 9.
b. Published capacity values are based on SEER2 static requirements.

LEGEND

— — Do Not Operate
cfm — Cubic Feet Per Minute (Supply Air)
EA (db) — Entering Air Temperature (dry bulb)
EA (wb) — Entering Air Temperature (wet bulb)
SHC — Sensible Heat Capacity (1000 Btuh) Gross
TC — Total Capacity (1000 Btuh) Gross

48/50FE*B06 — Unit with Humidi-MiZer® System in Subcooling Mode — Cooling Capacities[a]

TEMP (°F) AIR ENTERING CONDENSER (Edb)		AIR ENTERING EVAPORATOR — SCFM/BF								
		1500 / 0.01			2000 / 0.02			2500 / 0.03		
		Air Entering Evaporator — Ewb (°F)								
		72	67	62	72	67	62	72	67	62
75	TC	72.90	66.35	61.02	76.45	70.00	64.32	78.39	71.96	66.80
	SHC	27.40	35.54	44.24	29.57	40.50	51.23	30.19	43.54	55.90
	kW	3.90	3.85	3.82	4.16	4.20	4.27	4.58	4.54	4.50
85	TC	67.90	62.19	56.96	71.45	65.84	60.26	73.39	67.79	62.74
	SHC	23.50	32.46	41.23	25.67	37.42	48.22	26.29	40.46	52.89
	kW	4.30	4.26	4.22	4.56	4.61	4.67	4.98	4.95	4.90
95	TC	62.90	58.03	52.89	67.64	62.00	57.13	67.35	61.66	57.24
	SHC	19.60	29.38	38.23	20.43	32.10	43.58	19.95	34.00	47.00
	kW	4.70	4.67	4.62	5.16	5.20	5.25	5.69	5.64	5.60
105	TC	57.90	53.86	48.83	62.64	57.84	53.07	62.35	57.49	53.18
	SHC	15.70	26.30	35.22	16.53	29.02	40.58	16.05	30.92	43.99
	kW	5.10	5.08	5.02	5.56	5.61	5.65	6.09	6.05	6.00
115	TC	48.70	44.15	40.08	48.53	43.70	39.65	52.59	47.98	44.30
	SHC	9.00	19.05	28.91	7.27	19.70	31.91	8.35	23.43	36.50
	kW	6.10	6.05	6.00	6.35	6.40	6.45	6.79	6.74	6.70

NOTE(S):

a. Published capacity values are based on SEER2 static requirements.

48/50FE*B06 — Unit with Humidi-MiZer System in Hot Gas Reheat Mode — Cooling Capacities[a]

TEMP (°F) AIR ENTERING CONDENSER (Edb)		AIR ENTERING EVAPORATOR — Ewb (°F)								
		75 Dry Bulb 62.5 Wet Bulb (50% Relative)			75 Dry Bulb 64 Wet Bulb (56% Relative)			75 Dry Bulb 65.3 Wet Bulb (60% Relative)		
		Air Entering Evaporator — Cfm								
		1500	2000	2500	1500	2000	2500	1500	2000	2500
80	TC	19.31	19.07	18.83	23.35	23.09	22.78	26.78	26.52	26.14
	SHC	–1.12	–0.29	0.61	1.79	2.29	3.76	5.80	6.05	6.32
	kW	3.64	3.64	3.65	4.10	4.11	4.75	4.72	4.72	4.73
75	TC	20.69	20.63	19.31	24.36	23.43	22.96	21.93	21.88	20.51
	SHC	2.63	5.39	7.58	0.49	–2.30	3.92	–3.24	–1.91	–1.12
	kW	3.62	4.02	4.65	3.71	4.10	4.74	3.79	4.18	4.81
70	TC	21.79	21.77	20.49	22.45	22.44	21.13	20.03	20.02	18.68
	SHC	3.67	6.48	8.69	0.53	2.56	4.03	–2.20	–0.84	–0.01
	kW	3.60	4.00	4.63	3.69	4.09	4.72	3.60	4.16	4.79
60	TC	23.92	23.97	22.74	24.60	24.66	23.40	25.19	25.25	23.96
	SHC	5.70	8.58	10.84	2.57	4.67	6.19	–1.16	0.28	1.16
	kW	3.57	3.97	4.61	3.66	4.06	4.69	3.73	4.13	4.77
50	TC	20.07	20.13	18.94	24.00	23.83	22.61	24.27	24.09	22.87
	SHC	6.56	10.63	12.95	5.39	5.73	7.31	4.92	5.18	6.70
	kW	3.31	3.95	4.58	3.75	3.68	4.67	3.78	3.71	4.70
40	TC	22.03	22.23	21.08	28.75	28.95	27.77	29.37	29.57	28.37
	SHC	9.62	12.64	15.02	6.51	8.76	10.38	3.79	5.38	6.36
	kW	3.51	3.92	4.56	3.59	4.00	4.65	3.67	4.08	4.72

NOTE(S):

a. Published capacity values are based on SEER2 static requirements.

LEGEND

Edb — Entering Dry Bulb
Ewb — Entering Wet Bulb
kW — Compressor Power Input
SCFM/BF — Standard Cubic Feet per Minute/Bypass Factor
SHC — Sensible Heat Capacity (1000 Btuh) Gross
TC — Total Capacity (1000 Btuh) Gross

48/50FE*M07 High Stage Cooling Capacities[a,b]

48/50FE*M07				AMBIENT TEMPERATURE (°F)											
				85			95			105			115		
				EA (db)			EA (db)			EA (db)			EA (db)		
				75	80	85	75	80	85	75	80	85	75	80	85
1800 cfm	EA (wb)	58	TC	65.4	65.4	74.3	62.1	62.1	70.8	58.7	58.7	67.1	55.2	55.2	63.2
			SHC	56.4	65.4	74.3	53.5	62.1	70.8	50.4	58.7	67.1	47.2	55.2	63.2
		62	TC	69.3	69.3	69.9	65.4	65.4	67.5	61.2	61.2	65.0	56.9	56.9	62.5
			SHC	50.4	60.2	69.9	48.1	57.8	67.5	45.6	55.3	65.0	43.2	52.8	62.5
		67	TC	76.7	76.7	76.7	72.5	72.5	72.5	68.1	68.1	68.1	63.5	63.5	63.5
			SHC	41.1	50.8	60.6	38.7	48.5	58.2	36.3	46.1	55.8	33.9	43.6	53.3
		72	TC	84.8	84.8	84.8	80.2	80.2	80.2	75.5	75.5	75.5	70.6	70.6	70.6
			SHC	31.6	41.4	51.2	29.2	39.0	48.8	26.8	36.6	46.4	24.4	34.1	43.9
		76	TC	—	91.6	91.6	—	86.8	86.8	—	81.8	81.8	—	76.6	76.6
			SHC	—	33.6	43.5	—	31.3	41.2	—	28.9	38.8	—	26.5	36.4
2100 cfm	EA (wb)	58	TC	69.5	69.5	79.0	66.1	66.1	75.2	62.5	62.5	71.2	58.7	58.7	67.1
			SHC	60.1	69.5	79.0	57.0	66.1	75.2	53.7	62.5	71.2	50.3	58.7	67.1
		62	TC	71.8	71.8	77.4	67.6	67.6	74.9	63.4	63.4	72.3	59.0	59.0	69.5
			SHC	55.0	66.2	77.4	52.5	63.7	74.9	50.0	61.2	72.3	47.4	58.4	69.5
		67	TC	79.2	79.2	79.2	74.7	74.7	74.7	70.1	70.1	70.1	65.3	65.3	65.3
			SHC	44.0	55.3	66.6	41.6	52.9	64.2	39.1	50.4	61.7	36.7	47.9	59.2
		72	TC	87.3	87.3	87.3	82.6	82.6	82.6	77.7	77.7	77.7	72.5	72.5	72.5
			SHC	32.8	44.1	55.5	30.4	41.7	53.1	28.0	39.3	50.6	25.5	36.8	48.1
		76	TC	—	94.2	94.2	—	89.2	89.2	—	83.9	83.9	—	78.5	78.5
			SHC	—	35.1	46.6	—	32.7	44.2	—	30.3	41.7	—	27.7	39.1
2400 cfm	EA (wb)	58	TC	73.0	73.0	82.8	69.3	69.3	78.8	65.5	65.5	74.7	61.6	61.6	70.3
			SHC	63.1	73	82.8	59.8	69.3	78.8	56.4	65.5	74.7	52.8	61.6	70.3
		62	TC	73.8	73.8	84.5	70.2	70.2	79.6	65.6	65.6	77.8	61.6	61.6	73.3
			SHC	59.2	71.8	84.5	55.6	67.6	79.6	53.5	65.6	77.8	50.0	61.6	73.3
		67	TC	81.0	81.0	81.0	76.4	76.4	76.4	71.7	71.7	71.7	66.7	66.7	66.7
			SHC	46.7	59.5	72.4	44.3	57.1	69.9	41.8	54.6	67.4	39.3	52.1	64.9
		72	TC	89.2	89.2	89.2	84.4	84.4	84.4	79.3	79.3	79.3	74.0	74.0	74.0
			SHC	33.8	46.7	59.5	31.4	44.3	57.1	29.0	41.8	54.6	26.5	39.2	52.0
		76	TC	—	96.1	96.1	—	90.9	90.9	—	85.4	85.4	—	79.8	79.8
			SHC	—	36.3	49.3	—	33.9	46.8	—	31.3	44.2	—	28.8	41.5
2700 cfm	EA (wb)	58	TC	75.9	75.9	86.1	72.1	72.1	81.9	68.1	68.1	77.5	64.0	64.0	73.0
			SHC	65.7	75.9	86.1	62.3	72.1	81.9	58.7	68.1	77.5	54.9	64.0	73.0
		62	TC	76.0	76.0	89.5	72.2	72.2	85.2	68.2	68.2	80.7	64.0	64.0	76.0
			SHC	62.4	76.0	89.5	59.1	72.2	85.2	55.6	68.2	80.7	52.0	64.0	76.0
		67	TC	82.5	82.5	82.5	77.8	77.8	77.8	72.9	72.9	73.0	67.8	67.8	70.4
			SHC	49.3	63.7	78.0	46.9	61.2	75.5	44.4	58.7	73.0	41.9	56.1	70.4
		72	TC	90.8	90.8	90.8	85.7	85.7	85.7	80.5	80.5	80.5	75.1	75.1	75.1
			SHC	34.8	49.1	63.4	32.4	46.7	61.0	29.9	44.1	58.4	27.3	41.6	55.8
		76	TC	—	97.6	97.6	—	92.2	92.2	—	86.5	86.5	—	80.7	80.7
			SHC	—	37.3	51.7	—	34.8	49.1	—	32.3	46.4	—	29.6	43.6
3000 cfm	EA (wb)	58	TC	78.4	78.4	88.8	74.4	74.4	84.5	70.3	70.3	80.0	66.0	66.0	75.2
			SHC	67.9	78.4	88.8	64.3	74.4	84.5	60.6	70.3	80.0	56.7	66.0	75.2
		62	TC	78.5	78.5	92.4	74.5	74.5	87.9	70.4	70.4	83.3	66.1	66.1	78.4
			SHC	64.5	78.5	92.4	61.1	74.5	87.9	57.5	70.4	83.3	53.7	66.1	78.4
		67	TC	83.6	83.6	83.6	78.8	78.8	81.0	73.9	73.9	78.4	68.7	68.7	75.7
			SHC	51.9	67.7	83.5	49.4	65.2	81.0	46.9	62.7	78.4	44.4	60.0	75.7
		72	TC	92.0	92.0	92.0	86.9	86.9	86.9	81.5	81.5	81.5	76.0	76.0	76.0
			SHC	35.6	51.4	67.2	33.2	48.9	64.7	30.7	46.4	62.1	28.2	43.8	59.5
		76	TC	—	98.7	98.7	—	93.2	93.2	—	87.4	87.4	—	81.4	81.4
			SHC	—	38.2	53.9	—	35.7	51.2	—	33.0	48.4	—	30.3	45.4

NOTE(S):

a. See minimum-maximum airflow ratings on page 9.
b. Published capacity values are based on SEER2 static requirements.

LEGEND

— — Do Not Operate
cfm — Cubic Feet Per Minute (Supply Air)
EA (db) — Entering Air Temperature (dry bulb)
EA (wb) — Entering Air Temperature (wet bulb)
SHC — Sensible Heat Capacity (1000 Btuh) Gross
TC — Total Capacity (1000 Btuh) Gross

48/50FE*M07 Low Stage Cooling Capacities[a,b]

48/50FE*M07				AMBIENT TEMPERATURE (°F)											
				85			95			105			115		
				EA (db)			EA (db)			EA (db)			EA (db)		
				75	80	85	75	80	85	75	80	85	75	80	85
1200 cfm	EA (wb)	58	TC	42.3	42.3	48.5	39.0	39.0	44.9	35.5	35.5	41.2	32.0	32.0	37.4
			SHC	36.0	42.3	48.5	33.0	39.0	44.9	29.8	35.5	41.2	26.6	32.0	37.4
		62	TC	46.1	46.1	46.1	42.1	42.1	42.7	37.8	37.8	40.0	33.4	33.4	37.2
			SHC	32.1	38.7	45.3	29.5	36.1	42.7	26.8	33.4	40.0	24.1	30.7	37.2
		67	TC	52.6	52.6	52.6	48.4	48.4	48.4	43.9	43.9	43.9	39.3	39.3	39.3
			SHC	26.7	33.3	39.8	24.0	30.6	37.2	21.4	28.0	34.6	18.6	25.2	31.8
		72	TC	59.8	59.8	59.8	55.3	55.3	55.3	50.6	50.6	50.6	45.7	45.7	45.7
			SHC	21.1	27.7	34.3	18.5	25.1	31.7	15.8	22.4	29.0	13.1	19.7	26.3
		76	TC	—	66.0	66.0	—	61.3	61.3	—	56.4	56.4	—	51.2	51.2
			SHC	—	23.1	29.7	—	20.5	27.1	—	17.9	24.5	—	15.2	21.8
1400 cfm	EA (wb)	58	TC	45.9	45.9	52.5	42.4	42.4	48.8	38.8	38.8	44.8	35.0	35.0	40.7
			SHC	39.2	45.9	52.5	36.0	42.4	48.8	32.7	38.8	44.8	29.2	35.0	40.7
		62	TC	48.4	48.4	50.9	44.1	44.1	48.2	39.7	39.7	45.5	35.1	35.1	42.6
			SHC	35.6	43.3	50.9	32.9	40.6	48.2	30.2	37.8	45.5	27.3	35.0	42.6
		67	TC	55.1	55.1	55.1	50.6	50.6	50.6	45.9	45.9	45.9	41.0	41.0	41.0
			SHC	29.0	36.7	44.4	26.4	34.0	41.7	23.6	31.3	39.0	20.8	28.5	36.1
		72	TC	62.4	62.4	62.4	57.7	57.7	57.7	52.8	52.8	52.8	47.6	47.6	47.6
			SHC	22.3	30.0	37.7	19.7	27.4	35.1	16.9	24.6	32.3	14.2	21.9	29.6
		76	TC	—	68.7	68.7	—	63.8	63.8	—	58.6	58.6	—	53.1	53.1
			SHC	—	24.5	32.2	—	21.9	29.6	—	19.2	26.9	—	16.4	24.0
1600 cfm	EA (wb)	58	TC	49.0	49.0	56.0	45.3	45.3	52.0	41.5	41.5	47.9	37.5	37.5	43.6
			SHC	42.0	49.0	56.0	38.6	45.3	52	35.1	41.5	47.9	31.5	37.5	43.6
		62	TC	50.2	50.2	56.4	45.9	45.9	53.6	41.4	41.4	50.0	37.6	37.6	45.7
			SHC	38.9	47.7	56.4	36.2	44.9	53.6	32.8	41.4	50.0	29.6	37.6	45.7
		67	TC	57.0	57.0	57.0	52.3	52.3	52.3	47.4	47.4	47.4	42.4	42.4	42.4
			SHC	31.2	40.0	48.8	28.5	37.3	46.0	25.7	34.5	43.3	22.9	31.6	40.4
		72	TC	64.5	64.5	64.5	59.6	59.6	59.6	54.4	54.4	54.4	49.1	49.1	49.1
			SHC	23.4	32.2	40.9	20.7	29.5	38.3	17.9	26.7	35.5	15.1	23.9	32.7
		76	TC	—	70.8	70.8	—	65.6	65.6	—	60.2	60.2	—	54.3	54.3
			SHC	—	25.8	34.6	—	23.0	31.7	—	20.3	29.1	—	17.4	26.2
1800 cfm	EA (wb)	58	TC	51.7	51.7	59.0	47.9	47.9	54.9	43.9	43.9	50.6	39.8	39.8	46.0
			SHC	44.4	51.7	59.0	40.9	47.9	54.9	37.3	43.9	50.6	33.5	39.8	46.0
		62	TC	51.9	51.9	61.4	48.0	48.0	57.3	44.0	44.0	52.9	39.8	39.8	48.2
			SHC	42.0	51.7	61.4	38.7	48.0	57.3	35.1	44.0	52.9	31.5	39.8	48.2
		67	TC	58.5	58.5	58.5	53.7	53.7	53.7	48.7	48.7	48.7	43.5	43.5	44.5
			SHC	33.3	43.2	53.0	30.6	40.4	50.2	27.7	37.6	47.4	24.9	34.7	44.5
		72	TC	66.1	66.1	66.1	61.0	61.0	61.0	55.8	55.8	55.8	50.2	50.2	50.2
			SHC	24.3	34.2	44.1	21.6	31.5	41.4	18.8	28.7	38.6	15.9	25.8	35.7
		76	TC	—	72.3	72.3	—	66.9	66.9	—	61.2	61.2	—	55.2	55.2
			SHC	—	26.8	36.7	—	24.1	34.0	—	21.2	31.1	—	18.3	28.1
2000 cfm	EA (wb)	58	TC	54.1	54.1	61.7	50.1	50.1	57.4	46.0	46.0	52.9	41.7	41.7	48.2
			SHC	46.5	54.1	61.7	42.9	50.1	57.4	39.1	46.0	52.9	35.2	41.7	48.2
		62	TC	54.2	54.2	64.3	50.2	50.2	59.9	46.1	46.1	55.3	41.8	41.8	50.4
			SHC	44.1	54.2	64.3	40.6	50.2	59.9	36.9	46.1	55.3	33.1	41.8	50.4
		67	TC	59.7	59.7	59.7	54.9	54.9	54.9	49.7	49.7	51.5	44.4	44.4	48.6
			SHC	35.3	46.2	57.1	32.5	43.4	54.3	29.7	40.6	51.5	26.8	37.7	48.6
		72	TC	67.4	67.4	67.4	62.2	62.2	62.2	56.8	56.8	56.8	51.1	51.1	51.1
			SHC	25.2	36.2	47.1	22.4	33.4	44.3	19.6	30.5	41.5	16.7	27.6	38.6
		76	TC	—	73.5	73.5	—	67.9	67.9	—	62.0	62.0	—	55.7	55.7
			SHC	—	27.8	38.8	—	25.0	35.9	—	22.1	32.9	—	19.0	29.7

NOTE(S):

a. See minimum-maximum airflow ratings on page 9.
b. Published capacity values are based on SEER2 static requirements.

LEGEND

— — Do Not Operate
cfm — Cubic Feet Per Minute (Supply Air)
EA (db) — Entering Air Temperature (dry bulb)
EA (wb) — Entering Air Temperature (wet bulb)
SHC — Sensible Heat Capacity (1000 Btuh) Gross
TC — Total Capacity (1000 Btuh) Gross

48/50FE*N07 — Unit with Humidi-MiZer® System in Subcooling Mode — Cooling Capacities[a]

TEMP (°F) AIR ENTERING CONDENSER (Edb)		AIR ENTERING EVAPORATOR — SCFM/BF								
		1800 / 0.06			2400 / 0.08			3000 / 0.10		
		Air Entering Evaporator — Ewb (°F)								
		72	67	62	72	67	62	72	67	62
75	TC	78.38	69.20	64.70	84.37	76.99	72.48	84.15	76.56	72.44
	SHC	31.20	38.91	35.62	39.12	49.13	45.87	40.04	52.20	48.52
	kW	5.34	5.27	5.12	5.27	5.31	5.26	5.40	5.33	5.18
85	TC	70.75	64.04	61.40	78.33	71.48	62.50	78.08	70.90	68.77
	SHC	26.19	34.36	38.96	33.55	44.10	43.76	34.31	46.89	53.73
	kW	5.80	5.74	3.07	5.74	5.77	3.13	5.85	5.79	3.10
95	TC	58.10	58.24	52.09	65.01	65.29	58.92	64.16	64.46	58.39
	SHC	30.14	29.73	39.29	38.76	39.01	50.96	40.56	41.43	54.99
	kW	6.32	6.29	6.05	6.27	6.32	6.16	6.37	6.33	6.10
105	TC	52.78	52.83	48.51	64.24	58.04	52.51	58.24	58.51	54.42
	SHC	23.95	25.27	40.72	24.42	35.64	46.60	33.40	36.23	57.94
	kW	6.86	6.84	3.51	5.39	5.42	5.45	6.91	6.88	3.54
115	TC	51.38	45.80	40.82	57.85	52.10	46.95	56.72	50.77	45.78
	SHC	10.12	19.38	28.51	15.80	27.48	38.79	14.99	28.88	41.93
	kW	7.63	7.58	7.54	7.58	7.61	7.64	7.67	7.62	7.59

NOTE(S):

a. Published capacity values are based on SEER2 static requirements.

48/50FE*N07 — Unit with Humidi-MiZer System in Hot Gas Reheat Mode — Cooling Capacities[a]

TEMP (°F) AIR ENTERING CONDENSER (Edb)		AIR ENTERING EVAPORATOR — Ewb (°F)								
		75 Dry Bulb 62.5 Wet Bulb (50% Relative)			75 Dry Bulb 64 Wet Bulb (56% Relative)			75 Dry Bulb 65.3 Wet Bulb (60% Relative)		
		Air Entering Evaporator — Cfm								
		1800	2400	3000	1800	2400	3000	1800	2400	3000
80	TC	13.04	12.51	10.87	11.79	12.79	13.41	13.59	13.06	11.42
	SHC	3.02	3.70	3.55	–0.94	1.11	3.46	–0.98	–1.08	–2.01
	kW	5.17	5.50	6.13	5.57	5.58	5.58	5.32	5.64	6.26
75	TC	13.32	14.39	15.02	16.59	17.66	18.30	19.83	20.92	21.56
	SHC	1.60	4.23	7.07	5.19	7.29	9.64	8.70	10.34	12.28
	kW	5.29	5.31	5.31	5.26	5.27	5.28	5.23	5.24	5.25
70	TC	16.08	17.39	18.15	17.48	18.68	19.47	18.06	19.35	20.25
	SHC	–2.10	0.78	3.76	4.35	6.58	9.09	–4.80	–2.93	–0.74
	kW	4.00	3.95	3.93	5.06	5.05	5.03	3.87	3.83	3.81
60	TC	16.65	17.59	18.14	18.76	19.70	20.27	18.85	18.74	19.66
	SHC	–1.57	0.94	3.71	3.89	5.87	8.16	–4.25	–3.72	–1.49
	kW	3.98	4.02	4.04	4.80	4.83	4.85	4.12	4.09	4.04
50	TC	16.68	17.50	17.99	19.90	20.72	21.79	18.28	19.70	20.21
	SHC	–1.57	0.83	3.54	3.29	5.17	7.96	–4.79	–2.79	–0.97
	kW	4.07	4.12	4.16	4.56	4.61	4.54	4.06	4.00	4.03
40	TC	17.38	18.17	18.80	22.46	21.75	19.35	19.12	20.68	21.17
	SHC	–0.89	1.47	3.06	5.69	4.46	2.54	–3.97	–1.81	–0.02
	kW	4.01	4.08	4.13	3.96	4.39	4.92	3.98	3.92	3.95

NOTE(S):

a. Published capacity values are based on SEER2 static requirements.

LEGEND

Ewb — Entering wet bulb
kW — compressor Power Input
SCFM/BF — Standard Cubic Feet per Minute/Bypass Factor
SHC — Sensible Heat Capacity (1000 Btuh) Gross
TC — Total Capacity (1000 Btuh) Gross

Pressure Drops for Electric and Gas Heating Units

Pressure Drop for Electric Heat 3 Ton Units — 1 Stage Heat

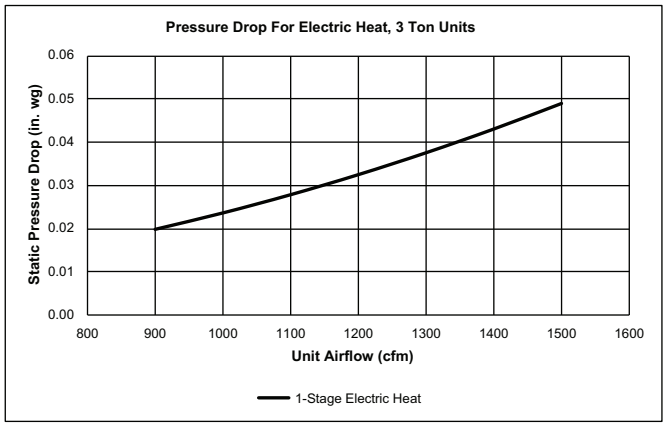

Pressure Drop for Electric Heat 4 to 6 Ton Units — 1 and 2 Stage Heat

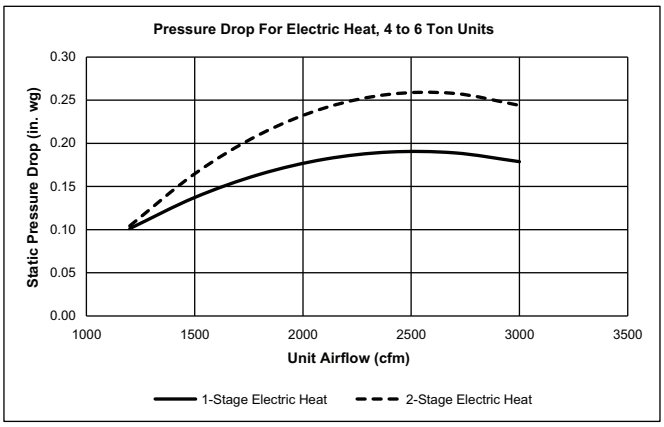

Pressure Drops across Gas Heat Exchanger for 48FE Ultra Low NOx 3 to 5 Ton Units

Pressure Drop across Gas Heat Exchanger, 48FE Ultra Low NOx — 3 Ton Units

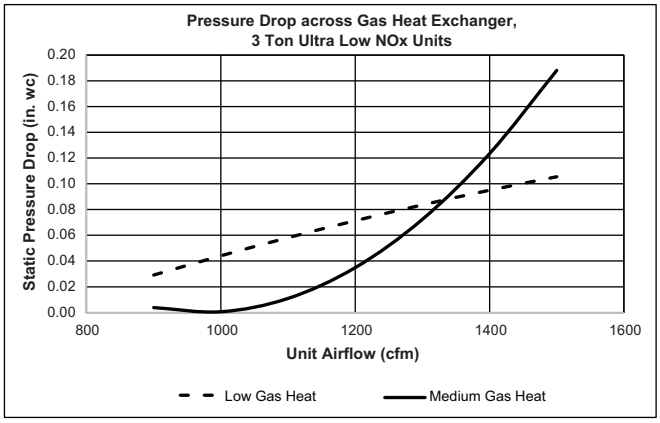

Pressure Drop across Gas Heat Exchanger, 48FE Ultra Low NOx — 4 to 5 Ton Units

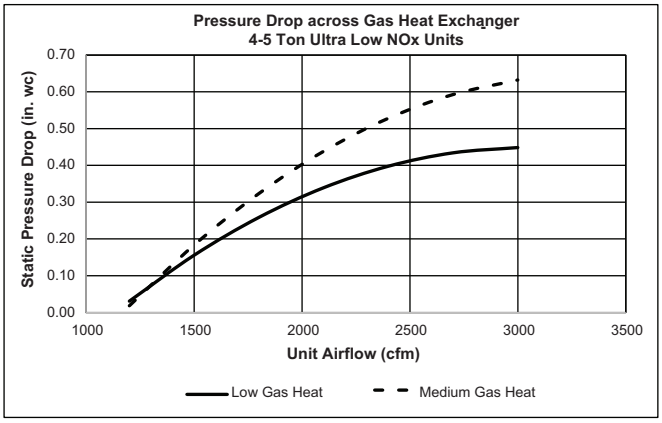

Single-Phase Gas Heat Stages

UNIT SIZE	HEAT SIZE		
1 Phase	Low	Med	High
04	1	1	—
05	1	1	1
06	1	1	1

Three-Phase Gas Heat Stages

UNIT SIZE	HEAT SIZE		
3 Phase	Low	Med	High
04	1	2	—
05	1	1	2
06	1	1	2
07	1	1	2

Gas Heat Stages for 48FE Ultra Low NOx — 3-5 Ton Units

UNIT SIZE	HEAT SIZE
1-Phase or 3-Phase	Low or Medium
04	1
05	1
06	1

Gas Heat Static Pressure Deductions (in. wg) — 3 Ton Units

CFM	900	1000	1100	1200	1300	1400	1500
LOW GAS HEAT DEDUCTION	0.63	0.58	0.53	0.47	0.40	0.33	0.26
MEDIUM GAS HEAT DEDUCTION	0.01	0.01	0.02	0.03	0.03	0.04	0.04

Gas Heat Static Pressure Deductions (in. wg) — 4 to 6 Ton Units

CFM	1200	1500	1800	2100	2400	2700	3000
LOW GAS HEAT DEDUCTION	0.02	0.18	0.32	0.44	0.53	0.59	0.63
MEDIUM GAS HEAT DEDUCTION	0.03	0.10	0.17	0.23	0.29	0.36	0.42
HIGH GAS HEAT DEDUCTION	0.01	0.05	0.08	0.12	0.15	0.18	0.20

Gas Heat Static Pressure Deductions (in. wg) for 48FE Ultra Low NOx — 3 Ton Units

CFM	900	1000	1100	1200	1300	1400	1500
LOW GAS HEAT DEDUCTION	0.63	0.58	0.53	0.47	0.40	0.33	0.26
MEDIUM GAS HEAT DEDUCTION	0.00	0.00	0.00	0.01	0.02	0.03	0.05

Gas Heat Static Pressure Deductions (in. wg) for 48FE Ultra Low NOx — 4 to 5 Ton Units

CFM	1200	1500	1800	2100	2400	2700	3000
LOW GAS HEAT DEDUCTION	0.02	0.18	0.32	0.44	0.53	0.59	0.63
MEDIUM GAS HEAT DEDUCTION	0.01	0.05	0.08	0.12	0.15	0.18	0.20

50FE 04-07 Field-Installed Accessory Electric Heater Data

50FE UNIT SIZE	VOLTAGE	HEATER MODEL NUMBER[a]	NUMBER OF STAGES
04	208/230	CRHEATER323A00	1
		CRHEATER324A00	1
		CRHEATER325A00	1
		CRHEATER326A00	1
		CRHEATER327A00	2
		CRHEATER328A00	1
	460	CRHEATER333A00	1
		CRHEATER334A00	1
		CRHEATER335A00	1
		CRHEATER336A00	1
	575	CRHEATER339A00	1
		CRHEATER340A00	1
05	208/230	CRHEATER323A00	1
		CRHEATER324A00	1
		CRHEATER325A00	1
		CRHEATER327A00	2
		CRHEATER328A00	1
		CRHEATER329A00	2
		CRHEATER330A00[b]	2
		CRHEATER331A00[c]	2
	460	CRHEATER333A00	1
		CRHEATER335A00	1
		CRHEATER336A00	1
		CRHEATER337A00	2
	575	CRHEATER339A00	1
		CRHEATER340A00	1
06	208/230	CRHEATER324A00	1
		CRHEATER325A00	1
		CRHEATER326A00	1
		CRHEATER327A00	2
		CRHEATER328A00	1
		CRHEATER329A00	2
		CRHEATER331A00	2
		CRHEATER332A00	2
	460	CRHEATER333A00	1
		CRHEATER335A00	1
		CRHEATER336A00	1
		CRHEATER337A00	2
		CRHEATER338A00	2
	575	CRHEATER340A00	1
		CRHEATER341A00	2
07	208/230	CRHEATER324A00	1
		CRHEATER326A00	1
		CRHEATER328A00	1
		CRHEATER331A00	2
		CRHEATER332A00	2
	460	CRHEATER333A00	1
		CRHEATER335A00	1
		CRHEATER336A00	1
		CRHEATER337A00	2
		CRHEATER338A00	2
	575	CRHEATER340A00	1
		CRHEATER341A00	2

NOTE(S):

a. Check heater nameplate for model number.
b. Do not use with size 05 horizontal supply duct configuration units.
c. Do not use with size 05 vertical supply duct configuration units.

Economizer Barometric Relief and Static Pressure

Horizontal Economizer Barometric Relief

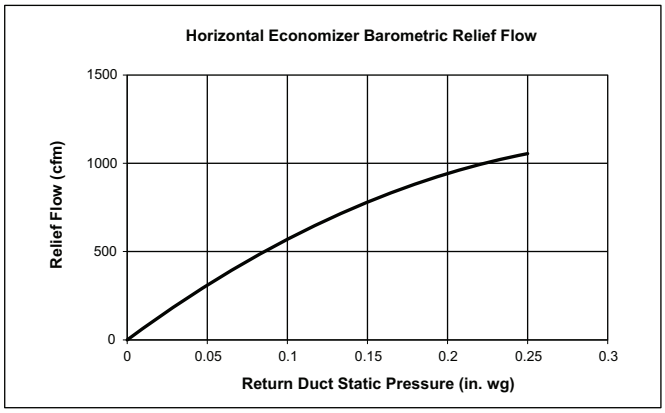

Vertical Economizer Barometric Relief

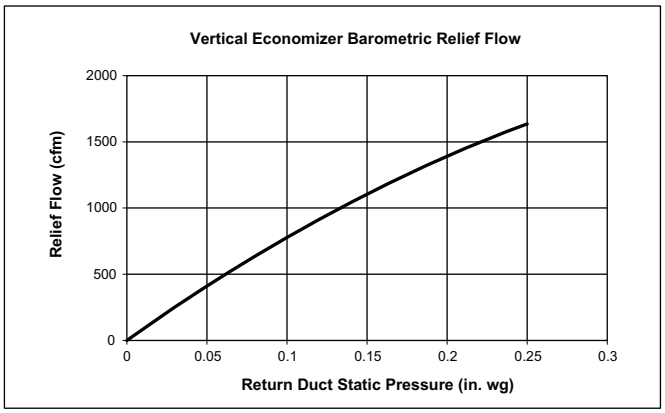

Horizontal Economizer Damper Leakage

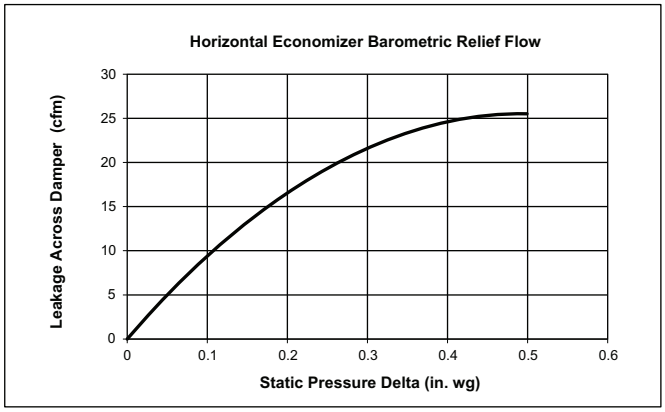

Vertical Economizer Damper Leakage

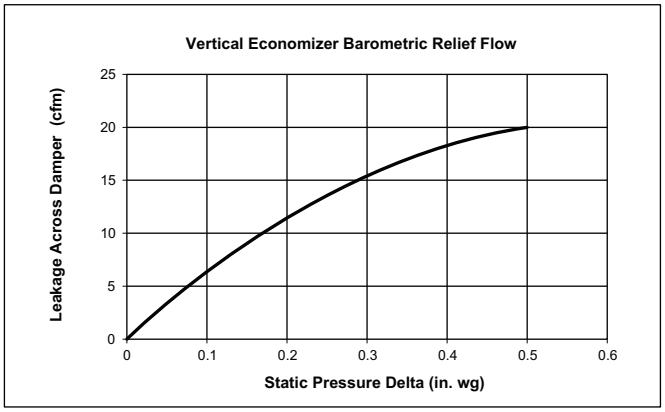

Humidi-MiZer® Coil Pressure Drops

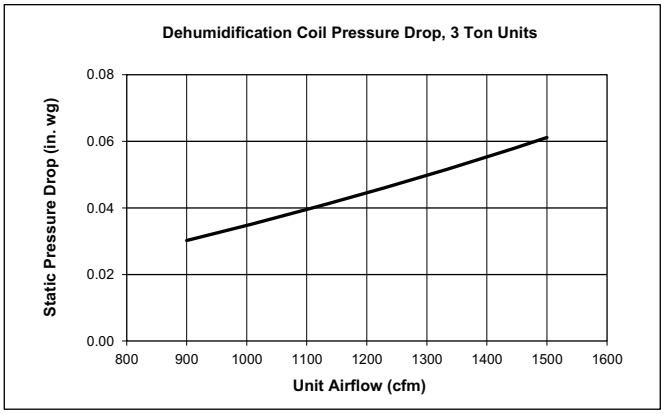

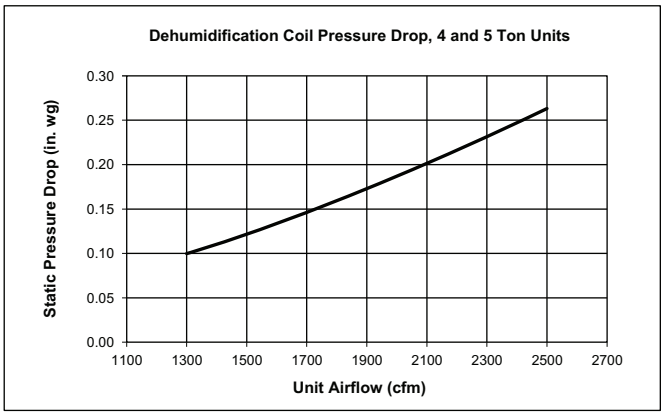

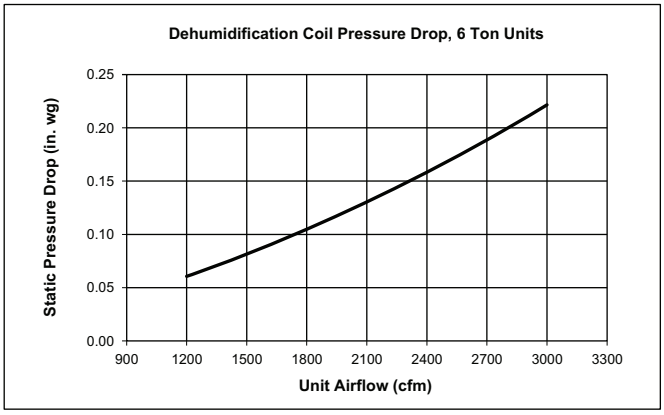

MERV-13 filters pressure drop

NOTE: For factory-installed MERV-13 filters, no additional pressure drop adjustments are necessary. The standard fan tables accommodate usage.

General Fan Performance Notes

1. Interpolation is permissible. Do not extrapolate.
2. External static pressure is the static pressure difference between the return duct and the supply duct plus the static pressure caused by any FIOPs or accessories.
3. Tabular data accounts for pressure loss due to clean filters, unit casing, wet coils, and highest gas heat exchanger (when gas heat unit).
4. Factory options and accessories may effect static pressure losses. Gas heat unit fan tables assume highest gas heat models; for fan selections with low or medium heat models, the user must deduct low and medium heat static pressures. Selection software is available, through your salesperson, to help you select the best motor/drive combination for your application.
5. The fan performance tables offer motor/drive recommendations. In cases when 2 motor/drive combinations would work, Carrier recommends the lower horsepower option.
6. Fan tables for 48FE units include highest gas heat. Utilize static pressure deduction tables on page 40 for lower gas heat capacities.
7. For information on the electrical properties of Carrier motors, please see the Electrical information section of this book.
8. For more information on the performance limits of Carrier motors, see the application data section of this book.
9. The EPACT (Energy Policy Act of 1992) regulates energy requirements for specific types of indoor fan motors. Motors regulated by EPACT include any general purpose, T-frame (3-digit, 143 and larger), single-speed, foot mounted, polyphase, squirrel cage induction motors of NEMA (National Electrical Manufacturers Association) design A and B, manufactured for use in the United States. Ranging from 1 to 200 Hp, these continuous-duty motors operate on 230 and 460 volt, 60 Hz power. If a motor does not fit into these specifications, the motor does not have to be replaced by an EPACT compliant energy-efficient motor. Variable-speed motors are exempt from EPACT compliance requirements.

48FEEA04 Single Phase — 3 Ton Vertical Supply (rpm - bhp)

CFM	AVAILABLE EXTERNAL STATIC PRESSURE (in. wg)									
	0.2		0.4		0.6		0.8		1.0	
	rpm	bhp	rpm	bhp	rpm	bhp	rpm	bhp	rpm	bhp
900	1112	0.10	1341	0.17	1530	0.25	1696	0.34	1845	0.44
975	1162	0.11	1385	0.19	1571	0.27	1733	0.36	1881	0.46
1050	1213	0.12	1431	0.20	1613	0.29	1772	0.39	1917	0.49
1125	1265	0.14	1477	0.22	1656	0.32	1813	0.41	1956	0.52
1200	1319	0.16	1525	0.25	1700	0.34	1855	0.44	1996	0.55
1275	1374	0.18	1573	0.27	1746	0.37	1898	0.48	2037	0.59
1350	1430	0.20	1623	0.30	1792	0.40	1942	0.51	2079	0.63
1425	1487	0.23	1674	0.33	1839	0.43	1987	0.55	2122	0.67
1500	1545	0.26	1725	0.36	1887	0.47	2032	0.58	2165	0.71

CFM	AVAILABLE EXTERNAL STATIC PRESSURE (in. wg)									
	1.2		1.4		1.6		1.8		2.0	
	rpm	bhp	rpm	bhp	rpm	bhp	rpm	bhp	rpm	bhp
900	1983	0.54	2111	0.66	2231	0.77	2344	0.90	2452	1.03
975	2016	0.57	2143	0.69	2262	0.81	2375	0.93	2482	1.06
1050	2051	0.60	2177	0.72	2294	0.84	2406	0.97	—	—
1125	2088	0.63	2211	0.75	2328	0.88	2438	1.01	—	—
1200	2126	0.67	2248	0.79	2363	0.92	2472	1.05	—	—
1275	2165	0.71	2285	0.83	2399	0.96	—	—	—	—
1350	2205	0.75	2324	0.87	2437	1.01	—	—	—	—
1425	2247	0.79	2364	0.92	2475	1.06	—	—	—	—
1500	2289	0.84	2405	0.97	—	—	—	—	—	—

Standard/Medium Static 1112-2190 rpm, 0.71 maximum bhp

High Static 1112-2490 rpm, 1.07 maximum bhp

48FEEA04 Single Phase — Standard/Medium Static — 3 Ton Vertical Supply (rpm - vdc)

CFM	AVAILABLE EXTERNAL STATIC PRESSURE (in. wg)									
	0.2		0.4		0.6		0.8		1.0	
	rpm	vdc	rpm	vdc	rpm	vdc	rpm	vdc	rpm	vdc
900	1112	5.1	1341	6.1	1530	7.0	1696	7.7	1845	8.4
975	1162	5.3	1385	6.3	1571	7.2	1733	7.9	1881	8.6
1050	1213	5.5	1431	6.5	1613	7.4	1772	8.1	1917	8.8
1125	1265	5.8	1477	6.7	1656	7.6	1813	8.3	1956	8.9
1200	1319	6.0	1525	7.0	1700	7.8	1855	8.5	1996	9.1
1275	1374	6.3	1573	7.2	1746	8.0	1898	8.7	2037	9.3
1350	1430	6.5	1623	7.4	1792	8.2	1942	8.9	2079	9.5
1425	1487	6.8	1674	7.6	1839	8.4	1987	9.1	2122	9.7
1500	1545	7.1	1725	7.9	1887	8.6	2032	9.3	2165	9.9

CFM	AVAILABLE EXTERNAL STATIC PRESSURE (in. wg)									
	1.2		1.4		1.6		1.8		2.0	
	rpm	vdc	rpm	vdc	rpm	vdc	rpm	vdc	rpm	vdc
900	1983	9.1	2111	9.6	—	—	—	—	—	—
975	2016	9.2	2143	9.8	—	—	—	—	—	—
1050	2051	9.4	—	—	—	—	—	—	—	—
1125	2088	9.5	—	—	—	—	—	—	—	—
1200	2126	9.7	—	—	—	—	—	—	—	—
1275	2165	9.9	—	—	—	—	—	—	—	—
1350	—	—	—	—	—	—	—	—	—	—
1425	—	—	—	—	—	—	—	—	—	—
1500	—	—	—	—	—	—	—	—	—	—

Standard/Medium Static 1112-2190 rpm

Fan data (cont)

48FEEA04 Single Phase — High Static — 3 Ton Vertical Supply (rpm - vdc)

CFM	AVAILABLE EXTERNAL STATIC PRESSURE (in. wg)									
	0.2		0.4		0.6		0.8		1.0	
	rpm	vdc	rpm	vdc	rpm	vdc	rpm	vdc	rpm	vdc
900	1112	4.5	1341	5.4	1530	6.1	1696	6.8	1845	7.4
975	1162	4.7	1385	5.6	1571	6.3	1733	7.0	1881	7.6
1050	1213	4.9	1431	5.7	1613	6.5	1772	7.1	1917	7.7
1125	1265	5.1	1477	5.9	1656	6.7	1813	7.3	1956	7.9
1200	1319	5.3	1525	6.1	1700	6.8	1855	7.4	1996	8.0
1275	1374	5.5	1573	6.3	1746	7.0	1898	7.6	2037	8.2
1350	1430	5.7	1623	6.5	1792	7.2	1942	7.8	2079	8.3
1425	1487	6.0	1674	6.7	1839	7.4	1987	8.0	2122	8.5
1500	1545	6.2	1725	6.9	1887	7.6	2032	8.2	2165	8.7

CFM	AVAILABLE EXTERNAL STATIC PRESSURE (in. wg)									
	1.2		1.4		1.6		1.8		2.0	
	rpm	vdc	rpm	vdc	rpm	vdc	rpm	vdc	rpm	vdc
900	1983	8.0	2111	8.5	2231	9.0	2344	9.4	2452	9.8
975	2016	8.1	2143	8.6	2262	9.1	2375	9.5	2482	10.0
1050	2051	8.2	2177	8.7	2294	9.2	2406	9.7	—	—
1125	2088	8.4	2211	8.9	2328	9.3	2438	9.8	—	—
1200	2126	8.5	2248	9.0	2363	9.5	2472	9.9	—	—
1275	2165	8.7	2285	9.2	2399	9.6	—	—	—	—
1350	2205	8.9	2324	9.3	2437	9.8	—	—	—	—
1425	2247	9.0	2364	9.5	2475	9.9	—	—	—	—
1500	2289	9.2	2405	9.7	—	—	—	—	—	—

High Static 1112-2490 rpm

48FEEA04 Three Phase — 3 Ton Vertical Supply (rpm - bhp)

CFM	AVAILABLE EXTERNAL STATIC PRESSURE (in. wg)									
	0.2		0.4		0.6		0.8		1.0	
	rpm	bhp	rpm	bhp	rpm	bhp	rpm	bhp	rpm	bhp
900	1112	0.10	1341	0.17	1530	0.25	1696	0.34	1845	0.44
975	1162	0.11	1385	0.19	1571	0.27	1733	0.36	1881	0.46
1050	1213	0.12	1431	0.20	1613	0.29	1772	0.39	1917	0.49
1125	1265	0.14	1477	0.22	1656	0.32	1813	0.41	1956	0.52
1200	1319	0.16	1525	0.25	1700	0.34	1855	0.44	1996	0.55
1275	1374	0.18	1573	0.27	1746	0.37	1898	0.48	2037	0.59
1350	1430	0.20	1623	0.30	1792	0.40	1942	0.51	2079	0.63
1425	1487	0.23	1674	0.33	1839	0.43	1987	0.55	2122	0.67
1500	1545	0.26	1725	0.36	1887	0.47	2032	0.58	2165	0.71

CFM	AVAILABLE EXTERNAL STATIC PRESSURE (in. wg)									
	1.2		1.4		1.6		1.8		2.0	
	rpm	bhp	rpm	bhp	rpm	bhp	rpm	bhp	rpm	bhp
900	1983	0.54	2111	0.66	2231	0.77	2344	0.90	2452	1.03
975	2016	0.57	2143	0.69	2262	0.81	2375	0.93	2482	1.06
1050	2051	0.60	2177	0.72	2294	0.84	2406	0.97	—	—
1125	2088	0.63	2211	0.75	2328	0.88	2438	1.01	—	—
1200	2126	0.67	2248	0.79	2363	0.92	2472	1.05	—	—
1275	2165	0.71	2285	0.83	2399	0.96	—	—	—	—
1350	2205	0.75	2324	0.87	2437	1.01	—	—	—	—
1425	2247	0.79	2364	0.92	2475	1.06	—	—	—	—
1500	2289	0.84	2405	0.97	—	—	—	—	—	—

Standard/Medium Static 1112-2190 rpm, 0.71 maximum bhp

High Static 1112-2490 rpm, 1.07 maximum bhp

48FEEA04 Three Phase — Standard/Medium Static — 3 Ton Vertical Supply (rpm - vdc)

CFM	AVAILABLE EXTERNAL STATIC PRESSURE (in. wg)									
	0.2		0.4		0.6		0.8		1.0	
	rpm	vdc	rpm	vdc	rpm	vdc	rpm	vdc	rpm	vdc
900	1112	5.1	1341	6.1	1530	7.0	1696	7.7	1845	8.4
975	1162	5.3	1385	6.3	1571	7.2	1733	7.9	1881	8.6
1050	1213	5.5	1431	6.5	1613	7.4	1772	8.1	1917	8.8
1125	1265	5.8	1477	6.7	1656	7.6	1813	8.3	1956	8.9
1200	1319	6.0	1525	7.0	1700	7.8	1855	8.5	1996	9.1
1275	1374	6.3	1573	7.2	1746	8.0	1898	8.7	2037	9.3
1350	1430	6.5	1623	7.4	1792	8.2	1942	8.9	2079	9.5
1425	1487	6.8	1674	7.6	1839	8.4	1987	9.1	2122	9.7
1500	1545	7.1	1725	7.9	1887	8.6	2032	9.3	2165	9.9

CFM	AVAILABLE EXTERNAL STATIC PRESSURE (in. wg)									
	1.2		1.4		1.6		1.8		2.0	
	rpm	vdc	rpm	vdc	rpm	vdc	rpm	vdc	rpm	vdc
900	1983	9.1	2111	9.6	—	—	—	—	—	—
975	2016	9.2	2143	9.8	—	—	—	—	—	—
1050	2051	9.4	—	—	—	—	—	—	—	—
1125	2088	9.5	—	—	—	—	—	—	—	—
1200	2126	9.7	—	—	—	—	—	—	—	—
1275	2165	9.9	—	—	—	—	—	—	—	—
1350	—	—	—	—	—	—	—	—	—	—
1425	—	—	—	—	—	—	—	—	—	—
1500	—	—	—	—	—	—	—	—	—	—

Standard/Medium Static 1112-2190 rpm

Fan data (cont)

48FEEA04 Three Phase — High Static — 3 Ton Vertical Supply (rpm - vdc)

CFM	AVAILABLE EXTERNAL STATIC PRESSURE (in. wg)									
	0.2		0.4		0.6		0.8		1.0	
	rpm	vdc	rpm	vdc	rpm	vdc	rpm	vdc	rpm	vdc
900	1112	4.5	1341	5.4	1530	6.1	1696	6.8	1845	7.4
975	1162	4.7	1385	5.6	1571	6.3	1733	7.0	1881	7.6
1050	1213	4.9	1431	5.7	1613	6.5	1772	7.1	1917	7.7
1125	1265	5.1	1477	5.9	1656	6.7	1813	7.3	1956	7.9
1200	1319	5.3	1525	6.1	1700	6.8	1855	7.4	1996	8.0
1275	1374	5.5	1573	6.3	1746	7.0	1898	7.6	2037	8.2
1350	1430	5.7	1623	6.5	1792	7.2	1942	7.8	2079	8.3
1425	1487	6.0	1674	6.7	1839	7.4	1987	8.0	2122	8.5
1500	1545	6.2	1725	6.9	1887	7.6	2032	8.2	2165	8.7

CFM	AVAILABLE EXTERNAL STATIC PRESSURE (in. wg)									
	1.2		1.4		1.6		1.8		2.0	
	rpm	vdc	rpm	vdc	rpm	vdc	rpm	vdc	rpm	vdc
900	1983	8.0	2111	8.5	2231	9.0	2344	9.4	2452	9.8
975	2016	8.1	2143	8.6	2262	9.1	2375	9.5	2482	10.0
1050	2051	8.2	2177	8.7	2294	9.2	2406	9.7	—	—
1125	2088	8.4	2211	8.9	2328	9.3	2438	9.8	—	—
1200	2126	8.5	2248	9.0	2363	9.5	2472	9.9	—	—
1275	2165	8.7	2285	9.2	2399	9.6	—	—	—	—
1350	2205	8.9	2324	9.3	2437	9.8	—	—	—	—
1425	2247	9.0	2364	9.5	2475	9.9	—	—	—	—
1500	2289	9.2	2405	9.7	—	—	—	—	—	—

High Static 1112-2490 rpm

Fan data (cont)

48FEFA05 Single Phase — 4 Ton Vertical Supply (rpm - bhp)

CFM	AVAILABLE EXTERNAL STATIC PRESSURE (in. wg)									
	0.2		0.4		0.6		0.8		1.0	
	rpm	bhp	rpm	bhp	rpm	bhp	rpm	bhp	rpm	bhp
1200	1262	0.21	1452	0.33	1614	0.45	1757	0.58	1888	0.72
1300	1333	0.25	1516	0.37	1674	0.50	1813	0.63	1942	0.78
1400	1405	0.29	1583	0.42	1735	0.55	1872	0.70	1997	0.84
1500	1478	0.34	1650	0.48	1798	0.62	1932	0.76	2054	0.92
1600	1552	0.40	1718	0.54	1863	0.68	1993	0.84	2114	1.00
1700	1627	0.46	1787	0.60	1928	0.76	2057	0.92	2174	1.09
1800	1704	0.52	1857	0.68	1995	0.84	2121	1.01	2236	1.18
1900	1781	0.60	1929	0.76	2063	0.93	2185	1.10	2299	1.28
2000	1859	0.68	2001	0.85	2132	1.02	2252	1.21	2363	1.39

CFM	AVAILABLE EXTERNAL STATIC PRESSURE (in. wg)									
	1.2		1.4		1.6		1.8		2.0	
	rpm	bhp	rpm	bhp	rpm	bhp	rpm	bhp	rpm	bhp
1200	2011	0.87	2126	1.02	2236	1.19	2341	1.37	2442	1.55
1300	2061	0.93	2174	1.09	2281	1.26	2384	1.44	—	—
1400	2114	1.00	2224	1.17	2329	1.34	2429	1.52	—	—
1500	2169	1.08	2277	1.25	2379	1.43	—	—	—	—
1600	2226	1.17	2331	1.34	2432	1.52	—	—	—	—
1700	2284	1.26	2388	1.44	—	—	—	—	—	—
1800	2344	1.36	2446	1.55	—	—	—	—	—	—
1900	2405	1.47	—	—	—	—	—	—	—	—
2000	—	—	—	—	—	—	—	—	—	—

Standard/Medium Static 1262-2170 rpm, 1.06 maximum bhp

High Static 1262-2460 rpm, 1.53 maximum bhp

48FEFA05 Single Phase — Standard/Medium Static — 4 Ton Vertical Supply (rpm - vdc)

CFM	AVAILABLE EXTERNAL STATIC PRESSURE (in. wg)									
	0.2		0.4		0.6		0.8		1.0	
	rpm	vdc	rpm	vdc	rpm	vdc	rpm	vdc	rpm	vdc
1200	1262	5.8	1452	6.7	1614	7.4	1757	8.1	1888	8.7
1300	1333	6.1	1516	7.0	1674	7.7	1813	8.4	1942	8.9
1400	1405	6.5	1583	7.3	1735	8.0	1872	8.6	1997	9.2
1500	1478	6.8	1650	7.6	1798	8.3	1932	8.9	2054	9.5
1600	1552	7.2	1718	7.9	1863	8.6	1993	9.2	2114	9.7
1700	1627	7.5	1787	8.2	1928	8.9	2057	9.5	—	—
1800	1704	7.9	1857	8.6	1995	9.2	2121	9.8	—	—
1900	1781	8.2	1929	8.9	2063	9.5	—	—	—	—
2000	1859	8.6	2001	9.2	2132	9.8	—	—	—	—

CFM	AVAILABLE EXTERNAL STATIC PRESSURE (in. wg)									
	1.2		1.4		1.6		1.8		2.0	
	rpm	vdc	rpm	vdc	rpm	vdc	rpm	vdc	rpm	vdc
1200	2011	9.3	2126	9.8	—	—	—	—	—	—
1300	2061	9.5	—	—	—	—	—	—	—	—
1400	2114	9.7	—	—	—	—	—	—	—	—
1500	—	—	—	—	—	—	—	—	—	—
1600	—	—	—	—	—	—	—	—	—	—
1700	—	—	—	—	—	—	—	—	—	—
1800	—	—	—	—	—	—	—	—	—	—
1900	—	—	—	—	—	—	—	—	—	—
2000	—	—	—	—	—	—	—	—	—	—

Standard/Medium Static 1262-2170 rpm

48FEFA05 Single Phase — High Static — 4 Ton Vertical Supply (rpm - vdc)

CFM	AVAILABLE EXTERNAL STATIC PRESSURE (in. wg)									
	0.2		0.4		0.6		0.8		1.0	
	rpm	vdc	rpm	vdc	rpm	vdc	rpm	vdc	rpm	vdc
1200	1262	5.1	1452	5.9	1614	6.6	1757	7.1	1888	7.7
1300	1333	5.4	1516	6.2	1674	6.8	1813	7.4	1942	7.9
1400	1405	5.7	1583	6.4	1735	7.1	1872	7.6	1997	8.1
1500	1478	6.0	1650	6.7	1798	7.3	1932	7.9	2054	8.3
1600	1552	6.3	1718	7.0	1863	7.6	1993	8.1	2114	8.6
1700	1627	6.6	1787	7.3	1928	7.8	2057	8.4	2174	8.8
1800	1704	6.9	1857	7.5	1995	8.1	2121	8.6	2236	9.1
1900	1781	7.2	1929	7.8	2063	8.4	2185	8.9	2299	9.3
2000	1859	7.6	2001	8.1	2132	8.7	2252	9.2	2363	9.6

CFM	AVAILABLE EXTERNAL STATIC PRESSURE (in. wg)									
	1.2		1.4		1.6		1.8		2.0	
	rpm	vdc	rpm	vdc	rpm	vdc	rpm	vdc	rpm	vdc
1200	2011	8.2	2126	8.6	2236	9.1	2341	9.5	2442	9.9
1300	2061	8.4	2174	8.8	2281	9.3	2384	9.7	—	—
1400	2114	8.6	2224	9.0	2329	9.5	2429	9.9	—	—
1500	2169	8.8	2277	9.3	2379	9.7	—	—	—	—
1600	2226	9.0	2331	9.5	2432	9.9	—	—	—	—
1700	2284	9.3	2388	9.7	—	—	—	—	—	—
1800	2344	9.5	2446	9.9	—	—	—	—	—	—
1900	2405	9.8	—	—	—	—	—	—	—	—
2000	—	—	—	—	—	—	—	—	—	—

High Static 1262-2460 rpm

Fan data (cont)

48FEFA05 Three Phase — 4 Ton Vertical Supply (rpm - bhp)

CFM	AVAILABLE EXTERNAL STATIC PRESSURE (in. wg)									
	0.2		0.4		0.6		0.8		1.0	
	rpm	bhp	rpm	bhp	rpm	bhp	rpm	bhp	rpm	bhp
1200	1262	0.21	1453	0.33	1614	0.45	1757	0.58	1888	0.72
1300	1333	0.25	1517	0.37	1674	0.50	1814	0.63	1942	0.78
1400	1405	0.29	1583	0.42	1736	0.56	1872	0.70	1998	0.85
1500	1478	0.34	1650	0.48	1799	0.62	1932	0.76	2055	0.92
1600	1553	0.40	1718	0.54	1863	0.68	1994	0.84	2114	1.00
1700	1628	0.46	1787	0.60	1929	0.76	2057	0.92	2174	1.09
1800	1704	0.52	1858	0.68	1995	0.84	2121	1.01	2236	1.18
1900	1781	0.60	1929	0.76	2063	0.93	2186	1.10	2299	1.28
2000	1859	0.68	2001	0.85	2132	1.02	2252	1.21	2363	1.39

CFM	AVAILABLE EXTERNAL STATIC PRESSURE (in. wg)									
	1.2		1.4		1.6		1.8		2.0	
	rpm	bhp	rpm	bhp	rpm	bhp	rpm	bhp	rpm	bhp
1200	2011	0.87	2126	1.02	2236	1.19	2341	1.37	2442	1.55
1300	2061	0.93	2174	1.09	2281	1.26	2383	1.44	2482	1.62
1400	2114	1.00	2224	1.17	2329	1.34	2429	1.52	2526	1.71
1500	2169	1.08	2277	1.25	2379	1.43	2478	1.61	2572	1.80
1600	2226	1.17	2332	1.34	2432	1.52	2528	1.71	2621	1.91
1700	2284	1.26	2388	1.44	2487	1.63	2581	1.82	—	—
1800	2344	1.36	2446	1.55	2543	1.74	2636	1.94	—	—
1900	2405	1.47	2505	1.66	2600	1.86	—	—	—	—
2000	2467	1.59	2566	1.79	2659	1.99	—	—	—	—

Standard/Medium Static 1262-2170 rpm, 1.06 maximum bhp

High Static 1262-2660 rpm, 1.96 maximum bhp

48FEFA05 Three Phase — Standard/Medium Static — 4 Ton Vertical Supply (rpm - vdc)

CFM	AVAILABLE EXTERNAL STATIC PRESSURE (in. wg)									
	0.2		0.4		0.6		0.8		1.0	
	rpm	vdc	rpm	vdc	rpm	vdc	rpm	vdc	rpm	vdc
1200	1262	5.8	1453	6.7	1614	7.4	1757	8.1	1888	8.7
1300	1333	6.1	1517	7.0	1674	7.7	1814	8.4	1942	8.9
1400	1405	6.5	1583	7.3	1736	8.0	1872	8.6	1998	9.2
1500	1478	6.8	1650	7.6	1799	8.3	1932	8.9	2055	9.5
1600	1553	7.2	1718	7.9	1863	8.6	1994	9.2	2114	9.7
1700	1628	7.5	1787	8.2	1929	8.9	2057	9.5	—	—
1800	1704	7.9	1858	8.6	1995	9.2	2121	9.8	—	—
1900	1781	8.2	1929	8.9	2063	9.5	—	—	—	—
2000	1859	8.6	2001	9.2	2132	9.8	—	—	—	—

CFM	AVAILABLE EXTERNAL STATIC PRESSURE (in. wg)									
	1.2		1.4		1.6		1.8		2.0	
	rpm	vdc	rpm	vdc	rpm	vdc	rpm	vdc	rpm	vdc
1200	2011	9.3	2126	9.8	—	—	—	—	—	—
1300	2061	9.5	—	—	—	—	—	—	—	—
1400	2114	9.7	—	—	—	—	—	—	—	—
1500	—	—	—	—	—	—	—	—	—	—
1600	—	—	—	—	—	—	—	—	—	—
1700	—	—	—	—	—	—	—	—	—	—
1800	—	—	—	—	—	—	—	—	—	—
1900	—	—	—	—	—	—	—	—	—	—
2000	—	—	—	—	—	—	—	—	—	—

Standard/Medium Static 1262-2170 rpm

Fan data (cont)

48FEFA05 Three Phase — High Static — 4 Ton Vertical Supply (rpm - vdc)

CFM	AVAILABLE EXTERNAL STATIC PRESSURE (in. wg)									
	0.2		0.4		0.6		0.8		1.0	
	rpm	vdc	rpm	vdc	rpm	vdc	rpm	vdc	rpm	vdc
1200	1262	4.7	1453	5.5	1614	6.1	1757	6.6	1888	7.1
1300	1333	5.0	1517	5.7	1674	6.3	1814	6.8	1942	7.3
1400	1405	5.3	1583	6.0	1736	6.5	1872	7.0	1998	7.5
1500	1478	5.6	1650	6.2	1799	6.8	1932	7.3	2055	7.7
1600	1553	5.8	1718	6.5	1863	7.0	1994	7.5	2114	7.9
1700	1628	6.1	1787	6.7	1929	7.3	2057	7.7	2174	8.2
1800	1704	6.4	1858	7.0	1995	7.5	2121	8.0	2236	8.4
1900	1781	6.7	1929	7.3	2063	7.8	2186	8.2	2299	8.6
2000	1859	7.0	2001	7.5	2132	8.0	2252	8.5	2363	8.9

CFM	AVAILABLE EXTERNAL STATIC PRESSURE (in. wg)									
	1.2		1.4		1.6		1.8		2.0	
	rpm	vdc	rpm	vdc	rpm	vdc	rpm	vdc	rpm	vdc
1200	2011	7.6	2126	8.0	2236	8.4	2341	8.8	2442	9.2
1300	2061	7.7	2174	8.2	2281	8.6	2383	9.0	2482	9.3
1400	2114	7.9	2224	8.4	2329	8.8	2429	9.1	2526	9.5
1500	2169	8.2	2277	8.6	2379	8.9	2478	9.3	2572	9.7
1600	2226	8.4	2332	8.8	2432	9.1	2528	9.5	2621	9.9
1700	2284	8.6	2388	9.0	2487	9.3	2581	9.7	—	—
1800	2344	8.8	2446	9.2	2543	9.6	2636	9.9	—	—
1900	2405	9.0	2505	9.4	2600	9.8	—	—	—	—
2000	2467	9.3	2566	9.6	2659	10.0	—	—	—	—

High Static 1262-2660 rpm

48FEFA06 Single Phase — 5 Ton Vertical Supply (rpm - bhp)

CFM	AVAILABLE EXTERNAL STATIC PRESSURE (in. wg)									
	0.2		0.4		0.6		0.8		1.0	
	rpm	bhp	rpm	bhp	rpm	bhp	rpm	bhp	rpm	bhp
1500	1478	0.34	1650	0.48	1799	0.62	1932	0.76	2054	0.92
1625	1571	0.41	1735	0.55	1879	0.70	2009	0.86	2129	1.02
1750	1666	0.49	1822	0.64	1962	0.80	2088	0.96	2205	1.13
1875	1762	0.58	1911	0.74	2046	0.91	2169	1.08	2283	1.26
2000	1859	0.68	2001	0.85	2132	1.02	2252	1.21	2363	1.39
2125	1957	0.79	2093	0.97	2218	1.15	2335	1.34	2444	1.54
2250	2056	0.92	2186	1.10	2307	1.30	2420	1.50	2527	1.70
2375	2156	1.06	2280	1.25	2396	1.45	2507	1.66	2611	1.88
2500	2256	1.21	2375	1.41	2487	1.62	2594	1.84	—	—

CFM	AVAILABLE EXTERNAL STATIC PRESSURE (in. wg)									
	1.2		1.4		1.6		1.8		2.0	
	rpm	bhp	rpm	bhp	rpm	bhp	rpm	bhp	rpm	bhp
1500	2169	1.08	2277	1.25	2379	1.43	2478	1.61	2572	1.80
1625	2240	1.19	2345	1.37	2445	1.55	2541	1.74	2634	1.93
1750	2314	1.31	2417	1.49	2514	1.68	2608	1.88	—	—
1875	2390	1.44	2490	1.63	2586	1.83	—	—	—	—
2000	2467	1.59	2566	1.79	2660	1.99	—	—	—	—
2125	2546	1.74	2643	1.95	—	—	—	—	—	—
2250	2627	1.91	—	—	—	—	—	—	—	—
2375	—	—	—	—	—	—	—	—	—	—
2500	—	—	—	—	—	—	—	—	—	—

Standard/Medium Static 1478-2390 rpm, 1.44 maximum bhp

High Static 1478-2660 rpm, 1.96 maximum bhp

48FEFA06 Single Phase — Standard/Medium Static — 5 Ton Vertical Supply (rpm - vdc)

CFM	AVAILABLE EXTERNAL STATIC PRESSURE (in. wg)									
	0.2		0.4		0.6		0.8		1.0	
	rpm	vdc	rpm	vdc	rpm	vdc	rpm	vdc	rpm	vdc
1500	1478	6.2	1650	6.9	1799	7.5	1932	8.1	2055	8.6
1625	1571	6.6	1735	7.3	1879	7.9	2009	8.4	2129	8.9
1750	1666	7.0	1822	7.6	1962	8.2	2088	8.7	2205	9.2
1875	1761	7.4	1910	8.0	2046	8.6	2169	9.1	2283	9.6
2000	1859	7.8	2001	8.4	2132	8.9	2252	9.4	2363	9.9
2125	1957	8.2	2093	8.8	2218	9.3	2335	9.8	—	—
2250	2056	8.6	2185	9.1	2307	9.7	—	—	—	—
2375	2155	9.0	2279	9.5	—	—	—	—	—	—
2500	2256	9.4	2374	9.9	—	—	—	—	—	—

CFM	AVAILABLE EXTERNAL STATIC PRESSURE (in. wg)									
	1.2		1.4		1.6		1.8		2.0	
	rpm	vdc	rpm	vdc	rpm	vdc	rpm	vdc	rpm	vdc
1500	2169	9.1	2277	9.5	2379	10.0	—	—	—	—
1625	2240	9.4	2345	9.8	—	—	—	—	—	—
1750	2314	9.7	—	—	—	—	—	—	—	—
1875	2389	10.0	—	—	—	—	—	—	—	—
2000	—	—	—	—	—	—	—	—	—	—
2125	—	—	—	—	—	—	—	—	—	—
2250	—	—	—	—	—	—	—	—	—	—
2375	—	—	—	—	—	—	—	—	—	—
2500	—	—	—	—	—	—	—	—	—	—

Standard/Medium Static 1478-2390 rpm

48FEFA06 Single Phase — High Static — 5 Ton Vertical Supply (rpm - vdc)

CFM	AVAILABLE EXTERNAL STATIC PRESSURE (in. wg)									
	0.2		0.4		0.6		0.8		1.0	
	rpm	vdc	rpm	vdc	rpm	vdc	rpm	vdc	rpm	vdc
1500	1478	5.6	1650	6.2	1799	6.8	1932	7.3	2054	7.7
1625	1571	5.9	1735	6.5	1879	7.1	2009	7.6	2129	8.0
1750	1666	6.3	1822	6.8	1962	7.4	2088	7.8	2205	8.3
1875	1762	6.6	1911	7.2	2046	7.7	2169	8.2	2283	8.6
2000	1859	7.0	2001	7.5	2132	8.0	2252	8.5	2363	8.9
2125	1957	7.4	2093	7.9	2218	8.3	2335	8.8	2444	9.2
2250	2056	7.7	2186	8.2	2307	8.7	2420	9.1	2527	9.5
2375	2156	8.1	2280	8.6	2396	9.0	2507	9.4	2611	9.8
2500	2256	8.5	2375	8.9	2487	9.3	2594	9.8	—	—

CFM	AVAILABLE EXTERNAL STATIC PRESSURE (in. wg)									
	1.2		1.4		1.6		1.8		2.0	
	rpm	vdc	rpm	vdc	rpm	vdc	rpm	vdc	rpm	vdc
1500	2169	8.2	2277	8.6	2379	8.9	2478	9.3	2572	9.7
1625	2240	8.4	2345	8.8	2445	9.2	2541	9.6	2634	9.9
1750	2314	8.7	2417	9.1	2514	9.5	2608	9.8	—	—
1875	2390	9.0	2490	9.4	2586	9.7	—	—	—	—
2000	2467	9.3	2566	9.6	2660	10.0	—	—	—	—
2125	2546	9.6	2643	9.9	—	—	—	—	—	—
2250	2627	9.9	—	—	—	—	—	—	—	—
2375	—	—	—	—	—	—	—	—	—	—
2500	—	—	—	—	—	—	—	—	—	—

High Static 1478-2660 rpm

48FEFA06 Three Phase — 5 Ton Vertical Supply (rpm - bhp)

CFM	AVAILABLE EXTERNAL STATIC PRESSURE (in. wg)									
	0.2		0.4		0.6		0.8		1.0	
	rpm	bhp	rpm	bhp	rpm	bhp	rpm	bhp	rpm	bhp
1500	1478	0.34	1650	0.48	1798	0.62	1932	0.76	2055	0.92
1625	1571	0.41	1735	0.55	1879	0.70	2009	0.86	2129	1.02
1750	1665	0.49	1822	0.64	1962	0.80	2088	0.96	2205	1.13
1875	1762	0.58	1911	0.74	2046	0.91	2169	1.08	2283	1.26
2000	1859	0.68	2001	0.85	2132	1.02	2252	1.21	2363	1.39
2125	1957	0.79	2093	0.97	2219	1.15	2335	1.34	2444	1.54
2250	2055	0.92	2185	1.10	2307	1.30	2420	1.50	2527	1.70
2375	2156	1.06	2279	1.25	2397	1.45	2507	1.66	2610	1.88
2500	2256	1.21	2374	1.41	2487	1.62	2594	1.84	2695	2.07

CFM	AVAILABLE EXTERNAL STATIC PRESSURE (in. wg)									
	1.2		1.4		1.6		1.8		2.0	
	rpm	bhp	rpm	bhp	rpm	bhp	rpm	bhp	rpm	bhp
1500	2169	1.08	2277	1.25	2379	1.43	2477	1.61	2572	1.80
1625	2240	1.19	2345	1.37	2445	1.55	2541	1.74	2633	1.93
1750	2314	1.31	2417	1.49	2514	1.68	2608	1.88	2698	2.08
1875	2389	1.44	2490	1.63	2586	1.83	2677	2.03	2766	2.24
2000	2467	1.59	2565	1.78	2659	1.99	2749	2.20	2836	2.41
2125	2546	1.74	2643	1.95	2734	2.16	2823	2.38	—	—
2250	2627	1.91	2721	2.13	2812	2.35	—	—	—	—
2375	2708	2.10	2801	2.32	—	—	—	—	—	—
2500	2791	2.30	—	—	—	—	—	—	—	—

Standard/Medium Static 1478-2390 rpm, 1.44 maximum bhp

High Static 1478-2836 rpm, 2.43 maximum bhp

48FEFA06 Three Phase — Standard/Medium Static — 5 Ton Vertical Supply (rpm - vdc)

CFM	AVAILABLE EXTERNAL STATIC PRESSURE (in. wg)									
	0.2		0.4		0.6		0.8		1.0	
	rpm	vdc	rpm	vdc	rpm	vdc	rpm	vdc	rpm	vdc
1500	1478	6.2	1650	6.9	1798	7.5	1932	8.1	2055	8.6
1625	1571	6.6	1735	7.3	1879	7.9	2009	8.4	2129	8.9
1750	1665	7.0	1822	7.6	1962	8.2	2088	8.7	2205	9.2
1875	1762	7.4	1911	8.0	2046	8.6	2169	9.1	2283	9.6
2000	1859	7.8	2001	8.4	2132	8.9	2252	9.4	2363	9.9
2125	1957	8.2	2093	8.8	2219	9.3	2335	9.8	—	—
2250	2055	8.6	2185	9.1	2307	9.7	—	—	—	—
2375	2156	9.0	2279	9.5	—	—	—	—	—	—
2500	2256	9.4	2374	9.9	—	—	—	—	—	—

CFM	AVAILABLE EXTERNAL STATIC PRESSURE (in. wg)									
	1.2		1.4		1.6		1.8		2.0	
	rpm	vdc	rpm	vdc	rpm	vdc	rpm	vdc	rpm	vdc
1500	2169	9.1	2277	9.5	2379	10.0	—	—	—	—
1625	2240	9.4	2345	9.8	—	—	—	—	—	—
1750	2314	9.7	—	—	—	—	—	—	—	—
1875	2389	10.0	—	—	—	—	—	—	—	—
2000	—	—	—	—	—	—	—	—	—	—
2125	—	—	—	—	—	—	—	—	—	—
2250	—	—	—	—	—	—	—	—	—	—
2375	—	—	—	—	—	—	—	—	—	—
2500	—	—	—	—	—	—	—	—	—	—

Standard/Medium Static 1478-2390 rpm

Fan data (cont)

48FEFA06 Three Phase — High Static — 5 Ton Vertical Supply (rpm - vdc)

CFM	AVAILABLE EXTERNAL STATIC PRESSURE (in. wg)									
	0.2		0.4		0.6		0.8		1.0	
	rpm	vdc	rpm	vdc	rpm	vdc	rpm	vdc	rpm	vdc
1500	1478	5.2	1650	5.8	1798	6.3	1932	6.8	2055	7.2
1625	1571	5.5	1735	6.1	1879	6.6	2009	7.1	2129	7.5
1750	1665	5.9	1822	6.4	1962	6.9	2088	7.4	2205	7.8
1875	1762	6.2	1911	6.7	2046	7.2	2169	7.6	2283	8.1
2000	1859	6.6	2001	7.1	2132	7.5	2252	7.9	2363	8.3
2125	1957	6.9	2093	7.4	2219	7.8	2335	8.2	2444	8.6
2250	2055	7.2	2185	7.7	2307	8.1	2420	8.5	2527	8.9
2375	2156	7.6	2279	8.0	2397	8.5	2507	8.8	2610	9.2
2500	2256	8.0	2374	8.4	2487	8.8	2594	9.1	2695	9.5

CFM	AVAILABLE EXTERNAL STATIC PRESSURE (in. wg)									
	1.2		1.4		1.6		1.8		2.0	
	rpm	vdc	rpm	vdc	rpm	vdc	rpm	vdc	rpm	vdc
1500	2169	7.6	2277	8.0	2379	8.4	2477	8.7	2572	9.1
1625	2240	7.9	2345	8.3	2445	8.6	2541	9.0	2633	9.3
1750	2314	8.2	2417	8.5	2514	8.9	2608	9.2	2698	9.5
1875	2389	8.4	2490	8.8	2586	9.1	2677	9.4	2766	9.8
2000	2467	8.7	2565	9.0	2659	9.4	2749	9.7	2836	10.0
2125	2546	9.0	2643	9.3	2734	9.6	2823	10.0	—	—
2250	2627	9.3	2721	9.6	2812	9.9	—	—	—	—
2375	2708	9.5	2801	9.9	—	—	—	—	—	—
2500	2791	9.8	—	—	—	—	—	—	—	—

High Static 1478-2836 rpm

48FEFM07 Three Phase — 6 Ton Vertical Supply (rpm - bhp)

CFM	AVAILABLE EXTERNAL STATIC PRESSURE (in. wg)									
	0.2		0.4		0.6		0.8		1.0	
	rpm	bhp	rpm	bhp	rpm	bhp	rpm	bhp	rpm	bhp
1800	1596	0.43	1749	0.56	1889	0.71	2015	0.86	2131	1.02
1950	1704	0.52	1847	0.67	1981	0.82	2104	0.98	2217	1.15
2100	1814	0.63	1948	0.78	2075	0.94	2194	1.12	2305	1.29
2250	1924	0.75	2050	0.91	2172	1.08	2286	1.26	2394	1.45
2400	2037	0.89	2155	1.06	2270	1.24	2381	1.43	2485	1.62
2550	2150	1.05	2261	1.22	2370	1.41	2476	1.61	2578	1.81
2700	2265	1.23	2368	1.40	2472	1.60	2574	1.80	2672	2.02
2850	2379	1.43	2477	1.61	2576	1.81	2674	2.02	2768	2.24
3000	2495	1.64	2587	1.83	2681	2.04	2775	2.26	—	—

CFM	AVAILABLE EXTERNAL STATIC PRESSURE (in. wg)									
	1.2		1.4		1.6		1.8		2.0	
	rpm	bhp	rpm	bhp	rpm	bhp	rpm	bhp	rpm	bhp
1800	2239	1.19	2340	1.35	2436	1.53	2528	1.71	2615	1.89
1950	2323	1.32	2422	1.50	2516	1.68	2605	1.87	2691	2.06
2100	2408	1.47	2505	1.66	2597	1.85	2685	2.04	2770	2.25
2250	2495	1.64	2590	1.84	2681	2.04	2767	2.24	—	—
2400	2584	1.82	2677	2.03	2766	2.24	—	—	—	—
2550	2674	2.02	2766	2.24	—	—	—	—	—	—
2700	2766	2.24	—	—	—	—	—	—	—	—
2850	—	—	—	—	—	—	—	—	—	—
3000	—	—	—	—	—	—	—	—	—	—

Standard/Medium Static 1596-2530 rpm, 1.76 maximum bhp

High Static 1596-2836 rpm, 2.43 maximum bhp

48FEFM07 Three Phase — Standard/Medium Static — 6 Ton Vertical Supply (rpm - vdc)

CFM	AVAILABLE EXTERNAL STATIC PRESSURE (in. wg)									
	0.2		0.4		0.6		0.8		1.0	
	rpm	vdc	rpm	vdc	rpm	vdc	rpm	vdc	rpm	vdc
1800	1596	6.3	1749	6.9	1889	7.5	2015	8.0	2131	8.4
1950	1704	6.7	1847	7.3	1981	7.8	2104	8.3	2217	8.8
2100	1814	7.2	1948	7.7	2075	8.2	2194	8.7	2305	9.1
2250	1925	7.6	2050	8.1	2172	8.6	2286	9.0	2394	9.5
2400	2037	8.1	2154	8.5	2270	9.0	2381	9.4	2485	9.8
2550	2150	8.5	2261	8.9	2370	9.4	2477	9.8	—	—
2700	2265	9.0	2368	9.4	2472	9.8	—	—	—	—
2850	2379	9.4	2477	9.8	—	—	—	—	—	—
3000	2495	9.9	—	—	—	—	—	—	—	—

CFM	AVAILABLE EXTERNAL STATIC PRESSURE (in. wg)									
	1.2		1.4		1.6		1.8		2.0	
	rpm	vdc	rpm	vdc	rpm	vdc	rpm	vdc	rpm	vdc
1800	2239	8.8	2340	9.2	2436	9.6	2527	10.0	—	—
1950	2323	9.2	2422	9.6	2516	9.9	—	—	—	—
2100	2408	9.5	2505	9.9	—	—	—	—	—	—
2250	2495	9.9	—	—	—	—	—	—	—	—
2400	—	—	—	—	—	—	—	—	—	—
2550	—	—	—	—	—	—	—	—	—	—
2700	—	—	—	—	—	—	—	—	—	—
2850	—	—	—	—	—	—	—	—	—	—
3000	—	—	—	—	—	—	—	—	—	—

Standard/Medium Static 1596-2530 rpm

Fan data (cont)

48FEFM07 Three Phase — High Static — 6 Ton Vertical Supply (rpm - vdc)

CFM	AVAILABLE EXTERNAL STATIC PRESSURE (in. wg)									
	0.2		0.4		0.6		0.8		1.0	
	rpm	vdc	rpm	vdc	rpm	vdc	rpm	vdc	rpm	vdc
1800	1596	5.6	1749	6.2	1889	6.7	2015	7.1	2131	7.5
1950	1704	6.0	1847	6.5	1981	7.0	2104	7.4	2217	7.8
2100	1814	6.4	1948	6.9	2075	7.3	2194	7.7	2305	8.1
2250	1925	6.8	2050	7.2	2172	7.7	2286	8.1	2394	8.4
2400	2037	7.2	2154	7.6	2270	8.0	2381	8.4	2485	8.8
2550	2150	7.6	2261	8.0	2370	8.4	2477	8.7	2578	9.1
2700	2265	8.0	2368	8.3	2472	8.7	2574	9.1	2672	9.4
2850	2379	8.4	2477	8.7	2576	9.1	2674	9.4	2768	9.8
3000	2495	8.8	2587	9.1	2681	9.5	2775	9.8	—	—

CFM	AVAILABLE EXTERNAL STATIC PRESSURE (in. wg)									
	1.2		1.4		1.6		1.8		2.0	
	rpm	vdc	rpm	vdc	rpm	vdc	rpm	vdc	rpm	vdc
1800	2239	7.9	2340	8.3	2436	8.6	2527	8.9	2615	9.2
1950	2323	8.2	2422	8.5	2516	8.9	2605	9.2	2691	9.5
2100	2408	8.5	2505	8.8	2597	9.2	2685	9.5	2770	9.8
2250	2495	8.8	2590	9.1	2681	9.5	2767	9.8	—	—
2400	2584	9.1	2677	9.4	2766	9.8	—	—	—	—
2550	2674	9.4	2766	9.8	—	—	—	—	—	—
2700	2766	9.8	—	—	—	—	—	—	—	—
2850	—	—	—	—	—	—	—	—	—	—
3000	—	—	—	—	—	—	—	—	—	—

High Static 1596-2836 rpm

48FEEA04 Single Phase — 3 Ton Horizontal Supply (rpm - bhp)

CFM	AVAILABLE EXTERNAL STATIC PRESSURE (in. wg)									
	0.2		0.4		0.6		0.8		1.0	
	rpm	bhp	rpm	bhp	rpm	bhp	rpm	bhp	rpm	bhp
900	1079	0.09	1315	0.16	1510	0.24	1679	0.33	1830	0.43
975	1126	0.10	1355	0.17	1546	0.26	1713	0.35	1863	0.45
1050	1175	0.11	1396	0.19	1584	0.28	1749	0.37	1897	0.48
1125	1226	0.13	1438	0.21	1622	0.30	1785	0.40	1932	0.50
1200	1278	0.15	1482	0.23	1662	0.32	1822	0.42	1968	0.53
1275	1331	0.16	1528	0.25	1703	0.34	1861	0.45	2004	0.56
1350	1386	0.19	1575	0.27	1746	0.37	1900	0.48	2042	0.59
1425	1441	0.21	1623	0.30	1789	0.40	1941	0.51	2080	0.63
1500	1498	0.23	1672	0.33	1834	0.43	1982	0.54	2119	0.66

CFM	AVAILABLE EXTERNAL STATIC PRESSURE (in. wg)									
	1.2		1.4		1.6		1.8		2.0	
	rpm	bhp	rpm	bhp	rpm	bhp	rpm	bhp	rpm	bhp
900	1968	0.53	2096	0.64	2215	0.76	2328	0.88	2434	1.00
975	2000	0.56	2127	0.67	2246	0.79	2358	0.91	2464	1.04
1050	2033	0.59	2159	0.70	2277	0.82	2389	0.95	—	—
1125	2067	0.61	2192	0.73	2309	0.86	2420	0.99	—	—
1200	2101	0.65	2225	0.77	2342	0.89	2452	1.03	—	—
1275	2136	0.68	2260	0.80	2376	0.93	2485	1.07	—	—
1350	2172	0.71	2295	0.84	2410	0.97	—	—	—	—
1425	2209	0.75	2330	0.88	2445	1.02	—	—	—	—
1500	2247	0.79	2367	0.92	2480	1.06	—	—	—	—

Standard/Medium Static 1079-2190 rpm, 0.71 maximum bhp

High Static 1079-2490 rpm, 1.07 maximum bhp

48FEEA04 Single Phase — Standard/Medium Static — 3 Ton Horizontal Supply (rpm - vdc)

CFM	AVAILABLE EXTERNAL STATIC PRESSURE (in. wg)									
	0.2		0.4		0.6		0.8		1.0	
	rpm	vdc	rpm	vdc	rpm	vdc	rpm	vdc	rpm	vdc
900	1079	4.9	1315	6.0	1510	6.9	1679	7.7	1830	8.4
975	1126	5.1	1355	6.2	1546	7.1	1713	7.8	1863	8.5
1050	1175	5.4	1396	6.4	1584	7.2	1749	8.0	1897	8.7
1125	1226	5.6	1438	6.6	1622	7.4	1785	8.2	1932	8.8
1200	1278	5.8	1482	6.8	1662	7.6	1822	8.3	1968	9.0
1275	1331	6.1	1528	7.0	1703	7.8	1861	8.5	2004	9.2
1350	1386	6.3	1575	7.2	1746	8.0	1900	8.7	2042	9.3
1425	1441	6.6	1623	7.4	1789	8.2	1941	8.9	2080	9.5
1500	1498	6.8	1672	7.6	1834	8.4	1982	9.1	2119	9.7

CFM	AVAILABLE EXTERNAL STATIC PRESSURE (in. wg)									
	1.2		1.4		1.6		1.8		2.0	
	rpm	vdc	rpm	vdc	rpm	vdc	rpm	vdc	rpm	vdc
900	1968	9.0	2096	9.6	—	—	—	—	—	—
975	2000	9.1	2127	9.7	—	—	—	—	—	—
1050	2033	9.3	2159	9.9	—	—	—	—	—	—
1125	2067	9.4	—	—	—	—	—	—	—	—
1200	2101	9.6	—	—	—	—	—	—	—	—
1275	2136	9.8	—	—	—	—	—	—	—	—
1350	2172	9.9	—	—	—	—	—	—	—	—
1425	—	—	—	—	—	—	—	—	—	—
1500	—	—	—	—	—	—	—	—	—	—

Standard/Medium Static 1079-2190 rpm

Fan data (cont)

48FEEA04 Single Phase — High Static — 3 Ton Horizontal Supply (rpm - vdc)

CFM	AVAILABLE EXTERNAL STATIC PRESSURE (in. wg)									
	0.2		0.4		0.6		0.8		1.0	
	rpm	vdc	rpm	vdc	rpm	vdc	rpm	vdc	rpm	vdc
900	1079	4.3	1315	5.3	1510	6.1	1679	6.7	1830	7.3
975	1126	4.5	1355	5.4	1546	6.2	1713	6.9	1863	7.5
1050	1175	4.7	1396	5.6	1584	6.4	1749	7.0	1897	7.6
1125	1226	4.9	1438	5.8	1622	6.5	1785	7.2	1932	7.8
1200	1278	5.1	1482	6.0	1662	6.7	1822	7.3	1968	7.9
1275	1331	5.3	1528	6.1	1703	6.8	1861	7.5	2004	8.0
1350	1386	5.6	1575	6.3	1746	7.0	1900	7.6	2042	8.2
1425	1441	5.8	1623	6.5	1789	7.2	1941	7.8	2080	8.4
1500	1498	6.0	1672	6.7	1834	7.4	1982	8.0	2119	8.5

CFM	AVAILABLE EXTERNAL STATIC PRESSURE (in. wg)									
	1.2		1.4		1.6		1.8		2.0	
	rpm	vdc	rpm	vdc	rpm	vdc	rpm	vdc	rpm	vdc
900	1968	7.9	2096	8.4	2215	8.9	2328	9.3	2434	9.8
975	2000	8.0	2127	8.5	2246	9.0	2358	9.5	2464	9.9
1050	2033	8.2	2159	8.7	2277	9.1	2389	9.6	—	—
1125	2067	8.3	2192	8.8	2309	9.3	2420	9.7	—	—
1200	2101	8.4	2225	8.9	2342	9.4	2452	9.8	—	—
1275	2136	8.6	2260	9.1	2376	9.5	2485	10.0	—	—
1350	2172	8.7	2295	9.2	2410	9.7	—	—	—	—
1425	2209	8.9	2330	9.4	2445	9.8	—	—	—	—
1500	2247	9.0	2367	9.5	2480	10.0	—	—	—	—

High Static 1079-2490 rpm

48FEEA04 Three Phase — 3 Ton Horizontal Supply (rpm - bhp)

CFM	AVAILABLE EXTERNAL STATIC PRESSURE (in. wg)									
	0.2		0.4		0.6		0.8		1.0	
	rpm	bhp	rpm	bhp	rpm	bhp	rpm	bhp	rpm	bhp
900	1079	0.09	1315	0.16	1510	0.24	1679	0.33	1830	0.43
975	1126	0.10	1355	0.17	1546	0.26	1713	0.35	1863	0.45
1050	1175	0.11	1396	0.19	1584	0.28	1749	0.37	1897	0.48
1125	1226	0.13	1438	0.21	1622	0.30	1785	0.40	1932	0.50
1200	1278	0.15	1482	0.23	1662	0.32	1822	0.42	1968	0.53
1275	1331	0.16	1528	0.25	1703	0.34	1861	0.45	2004	0.56
1350	1386	0.19	1575	0.27	1746	0.37	1900	0.48	2042	0.59
1425	1441	0.21	1623	0.30	1789	0.40	1941	0.51	2080	0.63
1500	1498	0.23	1672	0.33	1834	0.43	1982	0.54	2119	0.66

CFM	AVAILABLE EXTERNAL STATIC PRESSURE (in. wg)									
	1.2		1.4		1.6		1.8		2.0	
	rpm	bhp	rpm	bhp	rpm	bhp	rpm	bhp	rpm	bhp
900	1968	0.53	2096	0.64	2215	0.76	2328	0.88	2434	1.00
975	2000	0.56	2127	0.67	2246	0.79	2358	0.91	2464	1.04
1050	2033	0.59	2159	0.70	2277	0.82	2389	0.95	—	—
1125	2067	0.61	2192	0.73	2309	0.86	2420	0.99	—	—
1200	2101	0.65	2225	0.77	2342	0.89	2452	1.03	—	—
1275	2136	0.68	2260	0.80	2376	0.93	2485	1.07	—	—
1350	2172	0.71	2295	0.84	2410	0.97	—	—	—	—
1425	2209	0.75	2330	0.88	2445	1.02	—	—	—	—
1500	2247	0.79	2367	0.92	2480	1.06	—	—	—	—

Standard/Medium Static 1079-2190 rpm, 0.71 maximum bhp

High Static 1079-2490 rpm, 1.07 maximum bhp

48FEEA04 Three Phase — Standard/Medium Static — 3 Ton Horizontal Supply (rpm - vdc)

CFM	AVAILABLE EXTERNAL STATIC PRESSURE (in. wg)									
	0.2		0.4		0.6		0.8		1.0	
	rpm	vdc	rpm	vdc	rpm	vdc	rpm	vdc	rpm	vdc
900	1079	4.9	1315	6.0	1510	6.9	1679	7.7	1830	8.4
975	1126	5.1	1355	6.2	1546	7.1	1713	7.8	1863	8.5
1050	1175	5.4	1396	6.4	1584	7.2	1749	8.0	1897	8.7
1125	1226	5.6	1438	6.6	1622	7.4	1785	8.2	1932	8.8
1200	1278	5.8	1482	6.8	1662	7.6	1822	8.3	1968	9.0
1275	1331	6.1	1528	7.0	1703	7.8	1861	8.5	2004	9.2
1350	1386	6.3	1575	7.2	1746	8.0	1900	8.7	2042	9.3
1425	1441	6.6	1623	7.4	1789	8.2	1941	8.9	2080	9.5
1500	1498	6.8	1672	7.6	1834	8.4	1982	9.1	2119	9.7

CFM	AVAILABLE EXTERNAL STATIC PRESSURE (in. wg)									
	1.2		1.4		1.6		1.8		2.0	
	rpm	vdc	rpm	vdc	rpm	vdc	rpm	vdc	rpm	vdc
900	1968	9.0	2096	9.6	—	—	—	—	—	—
975	2000	9.1	2127	9.7	—	—	—	—	—	—
1050	2033	9.3	2159	9.9	—	—	—	—	—	—
1125	2067	9.4	—	—	—	—	—	—	—	—
1200	2101	9.6	—	—	—	—	—	—	—	—
1275	2136	9.8	—	—	—	—	—	—	—	—
1350	2172	9.9	—	—	—	—	—	—	—	—
1425	—	—	—	—	—	—	—	—	—	—
1500	—	—	—	—	—	—	—	—	—	—

Standard/Medium Static 1079-2190 rpm

Fan data (cont)

48FEEA04 Three Phase — High Static — 3 Ton Horizontal Supply (rpm - vdc)

CFM	AVAILABLE EXTERNAL STATIC PRESSURE (in. wg)									
	0.2		0.4		0.6		0.8		1.0	
	rpm	vdc	rpm	vdc	rpm	vdc	rpm	vdc	rpm	vdc
900	1079	4.3	1315	5.3	1510	6.1	1679	6.7	1830	7.3
975	1126	4.5	1355	5.4	1546	6.2	1713	6.9	1863	7.5
1050	1175	4.7	1396	5.6	1584	6.4	1749	7.0	1897	7.6
1125	1226	4.9	1438	5.8	1622	6.5	1785	7.2	1932	7.8
1200	1278	5.1	1482	6.0	1662	6.7	1822	7.3	1968	7.9
1275	1331	5.3	1528	6.1	1703	6.8	1861	7.5	2004	8.0
1350	1386	5.6	1575	6.3	1746	7.0	1900	7.6	2042	8.2
1425	1441	5.8	1623	6.5	1789	7.2	1941	7.8	2080	8.4
1500	1498	6.0	1672	6.7	1834	7.4	1982	8.0	2119	8.5

CFM	AVAILABLE EXTERNAL STATIC PRESSURE (in. wg)									
	1.2		1.4		1.6		1.8		2.0	
	rpm	vdc	rpm	vdc	rpm	vdc	rpm	vdc	rpm	vdc
900	1968	7.9	2096	8.4	2215	8.9	2328	9.3	2434	9.8
975	2000	8.0	2127	8.5	2246	9.0	2358	9.5	2464	9.9
1050	2033	8.2	2159	8.7	2277	9.1	2389	9.6	—	—
1125	2067	8.3	2192	8.8	2309	9.3	2420	9.7	—	—
1200	2101	8.4	2225	8.9	2342	9.4	2452	9.8	—	—
1275	2136	8.6	2260	9.1	2376	9.5	2485	10.0	—	—
1350	2172	8.7	2295	9.2	2410	9.7	—	—	—	—
1425	2209	8.9	2330	9.4	2445	9.8	—	—	—	—
1500	2247	9.0	2367	9.5	2480	10.0	—	—	—	—

High Static 1079-2490 rpm

48FEFA05 Single Phase — 4 Ton Horizontal Supply (rpm - bhp)

CFM	AVAILABLE EXTERNAL STATIC PRESSURE (in. wg)									
	0.2		0.4		0.6		0.8		1.0	
	rpm	bhp	rpm	bhp	rpm	bhp	rpm	bhp	rpm	bhp
1200	1217	0.19	1411	0.30	1576	0.42	1722	0.55	1855	0.68
1300	1283	0.23	1470	0.34	1631	0.46	1774	0.60	1904	0.74
1400	1351	0.26	1531	0.38	1688	0.51	1827	0.65	1955	0.80
1500	1420	0.31	1593	0.43	1746	0.57	1883	0.71	2008	0.86
1600	1491	0.35	1657	0.48	1805	0.63	1939	0.78	2062	0.93
1700	1563	0.41	1722	0.54	1866	0.69	1997	0.85	2118	1.01
1800	1635	0.46	1789	0.61	1928	0.76	2056	0.92	2174	1.09
1900	1709	0.53	1856	0.68	1991	0.84	2116	1.01	2232	1.18
2000	1784	0.60	1925	0.76	2056	0.92	2178	1.10	2291	1.28

CFM	AVAILABLE EXTERNAL STATIC PRESSURE (in. wg)									
	1.2		1.4		1.6		1.8		2.0	
	rpm	bhp	rpm	bhp	rpm	bhp	rpm	bhp	rpm	bhp
1200	1979	0.83	2094	0.98	2204	1.15	2308	1.32	2409	1.50
1300	2025	0.89	2138	1.05	2246	1.21	2349	1.39	2447	1.57
1400	2074	0.95	2185	1.11	2291	1.28	2391	1.46	—	—
1500	2124	1.02	2234	1.19	2338	1.36	2436	1.54	—	—
1600	2176	1.10	2284	1.27	2386	1.45	—	—	—	—
1700	2230	1.18	2336	1.36	2436	1.54	—	—	—	—
1800	2285	1.27	2389	1.45	—	—	—	—	—	—
1900	2341	1.36	2444	1.55	—	—	—	—	—	—
2000	2398	1.46	—	—	—	—	—	—	—	—

Standard/Medium Static 1217-2170 rpm, 1.06 maximum bhp

High Static 1216-2460 rpm, 1.53 maximum bhp

48FEFA05 Single Phase — Standard/Medium Static — 4 Ton Horizontal Supply (rpm - vdc)

CFM	AVAILABLE EXTERNAL STATIC PRESSURE (in. wg)									
	0.2		0.4		0.6		0.8		1.0	
	rpm	vdc	rpm	vdc	rpm	vdc	rpm	vdc	rpm	vdc
1200	1217	5.6	1411	6.5	1576	7.3	1722	7.9	1855	8.5
1300	1283	5.9	1470	6.8	1631	7.5	1774	8.2	1904	8.8
1400	1351	6.2	1531	7.1	1688	7.8	1827	8.4	1955	9.0
1500	1420	6.5	1593	7.3	1746	8.0	1883	8.7	2008	9.3
1600	1491	6.9	1657	7.6	1805	8.3	1939	8.9	2062	9.5
1700	1563	7.2	1722	7.9	1866	8.6	1997	9.2	2118	9.8
1800	1635	7.5	1789	8.2	1928	8.9	2056	9.5	—	—
1900	1709	7.9	1856	8.6	1991	9.2	2116	9.8	—	—
2000	1784	8.2	1925	8.9	2056	9.5	—	—	—	—

CFM	AVAILABLE EXTERNAL STATIC PRESSURE (in. wg)									
	1.2		1.4		1.6		1.8		2.0	
	rpm	vdc	rpm	vdc	rpm	vdc	rpm	vdc	rpm	vdc
1200	1979	9.1	2094	9.6	—	—	—	—	—	—
1300	2025	9.3	2138	9.9	—	—	—	—	—	—
1400	2074	9.6	—	—	—	—	—	—	—	—
1500	2124	9.8	—	—	—	—	—	—	—	—
1600	—	—	—	—	—	—	—	—	—	—
1700	—	—	—	—	—	—	—	—	—	—
1800	—	—	—	—	—	—	—	—	—	—
1900	—	—	—	—	—	—	—	—	—	—
2000	—	—	—	—	—	—	—	—	—	—

Standard/Medium Static 1217-2170 rpm

Fan data (cont)

48FEFA05 Single Phase — High Static — 4 Ton Horizontal Supply (rpm - vdc)

CFM	AVAILABLE EXTERNAL STATIC PRESSURE (in. wg)									
	0.2		0.4		0.6		0.8		1.0	
	rpm	vdc	rpm	vdc	rpm	vdc	rpm	vdc	rpm	vdc
1200	1217	4.9	1411	5.7	1576	6.4	1722	7.0	1855	7.5
1300	1283	5.2	1470	6.0	1631	6.6	1774	7.2	1904	7.7
1400	1351	5.5	1531	6.2	1688	6.9	1827	7.4	1955	7.9
1500	1420	5.8	1593	6.5	1746	7.1	1883	7.7	2008	8.2
1600	1491	6.1	1657	6.7	1805	7.3	1939	7.9	2062	8.4
1700	1563	6.4	1722	7.0	1866	7.6	1997	8.1	2118	8.6
1800	1635	6.6	1789	7.3	1928	7.8	2056	8.4	2174	8.8
1900	1709	6.9	1856	7.5	1991	8.1	2116	8.6	2232	9.1
2000	1784	7.3	1925	7.8	2056	8.4	2178	8.9	2291	9.3

CFM	AVAILABLE EXTERNAL STATIC PRESSURE (in. wg)									
	1.2		1.4		1.6		1.8		2.0	
	rpm	vdc	rpm	vdc	rpm	vdc	rpm	vdc	rpm	vdc
1200	1979	8.0	2094	8.5	2204	9.0	2308	9.4	2409	9.8
1300	2025	8.2	2138	8.7	2246	9.1	2349	9.5	2447	9.9
1400	2074	8.4	2185	8.9	2291	9.3	2391	9.7	—	—
1500	2124	8.6	2234	9.1	2338	9.5	2436	9.9	—	—
1600	2176	8.8	2284	9.3	2386	9.7	—	—	—	—
1700	2230	9.1	2336	9.5	2436	9.9	—	—	—	—
1800	2285	9.3	2389	9.7	—	—	—	—	—	—
1900	2341	9.5	2444	9.9	—	—	—	—	—	—
2000	2398	9.7	—	—	—	—	—	—	—	—

High Static 1217-2460 rpm

Fan data (cont)

48FEFA05 Three Phase — 4 Ton Horizontal Supply (rpm - bhp)

CFM	AVAILABLE EXTERNAL STATIC PRESSURE (in. wg)									
	0.2		0.4		0.6		0.8		1.0	
	rpm	bhp	rpm	bhp	rpm	bhp	rpm	bhp	rpm	bhp
1200	1216	0.19	1411	0.30	1576	0.42	1722	0.55	1855	0.68
1300	1282	0.23	1470	0.34	1631	0.46	1773	0.60	1904	0.74
1400	1351	0.26	1531	0.38	1688	0.51	1827	0.65	1955	0.80
1500	1420	0.31	1593	0.43	1746	0.57	1882	0.71	2008	0.86
1600	1491	0.35	1657	0.48	1806	0.63	1940	0.78	2062	0.93
1700	1563	0.41	1722	0.54	1866	0.69	1997	0.85	2118	1.01
1800	1636	0.47	1788	0.61	1928	0.76	2056	0.92	2175	1.09
1900	1710	0.53	1856	0.68	1991	0.84	2116	1.01	2233	1.18
2000	1784	0.60	1924	0.76	2055	0.92	2178	1.10	2292	1.28

CFM	AVAILABLE EXTERNAL STATIC PRESSURE (in. wg)									
	1.2		1.4		1.6		1.8		2.0	
	rpm	bhp	rpm	bhp	rpm	bhp	rpm	bhp	rpm	bhp
1200	1978	0.83	2094	0.98	2204	1.15	2308	1.32	2409	1.50
1300	2025	0.89	2139	1.05	2246	1.21	2349	1.39	2447	1.57
1400	2073	0.95	2185	1.11	2291	1.28	2392	1.46	2488	1.64
1500	2124	1.02	2233	1.19	2337	1.36	2437	1.54	2532	1.73
1600	2176	1.10	2284	1.27	2386	1.45	2483	1.63	2577	1.82
1700	2230	1.18	2336	1.36	2436	1.54	2532	1.73	2624	1.92
1800	2285	1.27	2389	1.45	2488	1.64	2582	1.83	—	—
1900	2341	1.36	2443	1.55	2541	1.74	2634	1.94	—	—
2000	2399	1.46	2499	1.66	2595	1.85	—	—	—	—

Standard/Medium Static 1216-2170 rpm, 1.06 maximum bhp

High Static 1216-2660 rpm, 1.96 maximum bhp

48FEFA05 Three Phase — Standard/Medium Static — 4 Ton Horizontal Supply (rpm - vdc)

CFM	AVAILABLE EXTERNAL STATIC PRESSURE (in. wg)									
	0.2		0.4		0.6		0.8		1.0	
	rpm	vdc	rpm	vdc	rpm	vdc	rpm	vdc	rpm	vdc
1200	1216	5.6	1411	6.5	1576	7.3	1722	7.9	1855	8.5
1300	1282	5.9	1470	6.8	1631	7.5	1773	8.2	1904	8.8
1400	1351	6.2	1531	7.1	1688	7.8	1827	8.4	1955	9.0
1500	1420	6.5	1593	7.3	1746	8.0	1882	8.7	2008	9.3
1600	1491	6.9	1657	7.6	1806	8.3	1940	8.9	2062	9.5
1700	1563	7.2	1722	7.9	1866	8.6	1997	9.2	2118	9.8
1800	1636	7.5	1788	8.2	1928	8.9	2056	9.5	—	—
1900	1710	7.9	1856	8.6	1991	9.2	2116	9.8	—	—
2000	1784	8.2	1924	8.9	2055	9.5	—	—	—	—

CFM	AVAILABLE EXTERNAL STATIC PRESSURE (in. wg)									
	1.2		1.4		1.6		1.8		2.0	
	rpm	vdc	rpm	vdc	rpm	vdc	rpm	vdc	rpm	vdc
1200	1978	9.1	2094	9.6	—	—	—	—	—	—
1300	2025	9.3	2139	9.9	—	—	—	—	—	—
1400	2073	9.6	—	—	—	—	—	—	—	—
1500	2124	9.8	—	—	—	—	—	—	—	—
1600	—	—	—	—	—	—	—	—	—	—
1700	—	—	—	—	—	—	—	—	—	—
1800	—	—	—	—	—	—	—	—	—	—
1900	—	—	—	—	—	—	—	—	—	—
2000	—	—	—	—	—	—	—	—	—	—

Standard/Medium Static 1216-2170 rpm,

48FEFA05 Three Phase — High Static — 4 Ton Horizontal Supply (rpm - vdc)

CFM	AVAILABLE EXTERNAL STATIC PRESSURE (in. wg)									
	0.2		0.4		0.6		0.8		1.0	
	rpm	vdc	rpm	vdc	rpm	vdc	rpm	vdc	rpm	vdc
1200	1216	4.6	1411	5.3	1576	5.9	1722	6.5	1855	7.0
1300	1282	4.8	1470	5.5	1631	6.1	1773	6.7	1904	7.2
1400	1351	5.1	1531	5.8	1688	6.3	1827	6.9	1955	7.3
1500	1420	5.3	1593	6.0	1746	6.6	1882	7.1	2008	7.5
1600	1491	5.6	1657	6.2	1806	6.8	1940	7.3	2062	7.8
1700	1563	5.9	1722	6.5	1866	7.0	1997	7.5	2118	8.0
1800	1636	6.2	1788	6.7	1928	7.2	2056	7.7	2175	8.2
1900	1710	6.4	1856	7.0	1991	7.5	2116	8.0	2233	8.4
2000	1784	6.7	1924	7.2	2055	7.7	2178	8.2	2292	8.6

CFM	AVAILABLE EXTERNAL STATIC PRESSURE (in. wg)									
	1.2		1.4		1.6		1.8		2.0	
	rpm	vdc	rpm	vdc	rpm	vdc	rpm	vdc	rpm	vdc
1200	1978	7.4	2094	7.9	2204	8.3	2308	8.7	2409	9.1
1300	2025	7.6	2139	8.0	2246	8.4	2349	8.8	2447	9.2
1400	2073	7.8	2185	8.2	2291	8.6	2392	9.0	2488	9.4
1500	2124	8.0	2233	8.4	2337	8.8	2437	9.2	2532	9.5
1600	2176	8.2	2284	8.6	2386	9.0	2483	9.3	2577	9.7
1700	2230	8.4	2336	8.8	2436	9.2	2532	9.5	2624	9.9
1800	2285	8.6	2389	9.0	2488	9.4	2582	9.7	—	—
1900	2341	8.8	2443	9.2	2541	9.6	2634	9.9	—	—
2000	2399	9.0	2499	9.4	2595	9.8	—	—	—	—

High Static 1216-2660 rpm

48FEFA06 Single Phase — 5 Ton Horizontal Supply (rpm - bhp)

CFM	AVAILABLE EXTERNAL STATIC PRESSURE (in. wg)									
	0.2		0.4		0.6		0.8		1.0	
	rpm	bhp	rpm	bhp	rpm	bhp	rpm	bhp	rpm	bhp
1500	1420	0.31	1593	0.43	1746	0.57	1883	0.71	2008	0.86
1625	1509	0.37	1674	0.50	1820	0.64	1954	0.79	2076	0.95
1750	1599	0.43	1756	0.58	1897	0.73	2027	0.89	2146	1.05
1875	1691	0.51	1839	0.66	1976	0.82	2101	0.98	2218	1.16
2000	1784	0.60	1925	0.76	2056	0.92	2178	1.10	2292	1.28
2125	1879	0.70	2011	0.86	2138	1.04	2256	1.22	2367	1.41
2250	1974	0.81	2100	0.98	2221	1.16	2335	1.35	2444	1.55
2375	2070	0.94	2189	1.11	2306	1.30	2417	1.49	2522	1.70
2500	2166	1.08	2280	1.25	2392	1.45	2499	1.65	2602	1.86

CFM	AVAILABLE EXTERNAL STATIC PRESSURE (in. wg)									
	1.2		1.4		1.6		1.8		2.0	
	rpm	bhp	rpm	bhp	rpm	bhp	rpm	bhp	rpm	bhp
1500	2124	1.02	2234	1.19	2338	1.36	2437	1.54	2532	1.73
1625	2190	1.12	2297	1.29	2399	1.47	2496	1.65	2589	1.85
1750	2258	1.22	2363	1.40	2462	1.59	2557	1.78	2649	1.98
1875	2327	1.34	2430	1.52	2528	1.72	2621	1.91	—	—
2000	2398	1.46	2499	1.66	2596	1.86	—	—	—	—
2125	2471	1.60	2570	1.80	—	—	—	—	—	—
2250	2546	1.75	2643	1.96	—	—	—	—	—	—
2375	2622	1.91	—	—	—	—	—	—	—	—
2500	—	—	—	—	—	—	—	—	—	—

Standard/Medium Static 1420-2390 rpm, 1.44 maximum bhp

High Static 1420-2660 rpm, 1.96 maximum bhp

48FEFA06 Single Phase — Standard/Medium Static — 5 Ton Horizontal Supply (rpm - vdc)

CFM	AVAILABLE EXTERNAL STATIC PRESSURE (in. wg)									
	0.2		0.4		0.6		0.8		1.0	
	rpm	vdc	rpm	vdc	rpm	vdc	rpm	vdc	rpm	vdc
1500	1420	5.9	1593	6.7	1746	7.3	1883	7.9	2008	8.4
1625	1509	6.3	1673	7.0	1820	7.6	1954	8.2	2076	8.7
1750	1599	6.7	1755	7.3	1897	7.9	2026	8.5	2146	9.0
1875	1691	7.1	1839	7.7	1975	8.3	2101	8.8	2218	9.3
2000	1784	7.5	1925	8.1	2056	8.6	2178	9.1	2291	9.6
2125	1878	7.9	2011	8.4	2138	8.9	2255	9.4	2367	9.9
2250	1974	8.3	2100	8.8	2221	9.3	2335	9.8	—	—
2375	2070	8.7	2189	9.2	2305	9.6	—	—	—	—
2500	2166	9.1	2280	9.5	—	—	—	—	—	—

CFM	AVAILABLE EXTERNAL STATIC PRESSURE (in. wg)									
	1.2		1.4		1.6		1.8		2.0	
	rpm	vdc	rpm	vdc	rpm	vdc	rpm	vdc	rpm	vdc
1500	2124	8.9	2234	9.3	2338	9.8	—	—	—	—
1625	2190	9.2	2297	9.6	—	—	—	—	—	—
1750	2257	9.4	2362	9.9	—	—	—	—	—	—
1875	2327	9.7	—	—	—	—	—	—	—	—
2000	—	—	—	—	—	—	—	—	—	—
2125	—	—	—	—	—	—	—	—	—	—
2250	—	—	—	—	—	—	—	—	—	—
2375	—	—	—	—	—	—	—	—	—	—
2500	—	—	—	—	—	—	—	—	—	—

Standard/Medium Static 1420-2390 rpm

Fan data (cont)

48FEFA06 Single Phase — High Static — 5 Ton Horizontal Supply (rpm - vdc)

CFM	AVAILABLE EXTERNAL STATIC PRESSURE (in. wg)									
	0.2		0.4		0.6		0.8		1.0	
	rpm	vdc	rpm	vdc	rpm	vdc	rpm	vdc	rpm	vdc
1500	1420	5.3	1593	6.0	1746	6.6	1883	7.1	2008	7.5
1625	1509	5.7	1674	6.3	1820	6.8	1954	7.3	2076	7.8
1750	1599	6.0	1756	6.6	1897	7.1	2027	7.6	2146	8.1
1875	1691	6.4	1839	6.9	1976	7.4	2101	7.9	2218	8.3
2000	1784	6.7	1925	7.2	2056	7.7	2178	8.2	2292	8.6
2125	1879	7.1	2011	7.6	2138	8.0	2256	8.5	2367	8.9
2250	1974	7.4	2100	7.9	2221	8.3	2335	8.8	2444	9.2
2375	2070	7.8	2189	8.2	2306	8.7	2417	9.1	2522	9.5
2500	2166	8.1	2280	8.6	2392	9.0	2499	9.4	2602	9.8

CFM	AVAILABLE EXTERNAL STATIC PRESSURE (in. wg)									
	1.2		1.4		1.6		1.8		2.0	
	rpm	vdc	rpm	vdc	rpm	vdc	rpm	vdc	rpm	vdc
1500	2124	8.0	2234	8.4	2338	8.8	2437	9.2	2532	9.5
1625	2190	8.2	2297	8.6	2399	9.0	2496	9.4	2589	9.7
1750	2258	8.5	2363	8.9	2462	9.3	2557	9.6	2649	10.0
1875	2327	8.7	2430	9.1	2528	9.5	2621	9.9	—	—
2000	2398	9.0	2499	9.4	2596	9.8	—	—	—	—
2125	2471	9.3	2570	9.7	—	—	—	—	—	—
2250	2546	9.6	2643	9.9	—	—	—	—	—	—
2375	2622	9.9	—	—	—	—	—	—	—	—
2500	—	—	—	—	—	—	—	—	—	—

High Static 1420-2660 rpm

Fan data (cont)

48FEFA06 Three Phase — 5 Ton Horizontal Supply (rpm - bhp)

CFM	AVAILABLE EXTERNAL STATIC PRESSURE (in. wg)									
	0.2		0.4		0.6		0.8		1.0	
	rpm	bhp	rpm	bhp	rpm	bhp	rpm	bhp	rpm	bhp
1500	1420	0.31	1593	0.43	1746	0.57	1883	0.71	2008	0.86
1625	1509	0.37	1673	0.50	1820	0.64	1954	0.79	2076	0.95
1750	1599	0.43	1755	0.57	1897	0.73	2026	0.88	2146	1.05
1875	1691	0.51	1839	0.66	1976	0.82	2102	0.99	2218	1.16
2000	1784	0.60	1924	0.76	2056	0.92	2178	1.10	2291	1.28
2125	1878	0.70	2011	0.86	2137	1.03	2256	1.22	2367	1.41
2250	1974	0.81	2099	0.98	2221	1.16	2335	1.35	2444	1.55
2375	2070	0.94	2189	1.11	2305	1.30	2416	1.49	2522	1.70
2500	2166	1.08	2280	1.25	2391	1.45	2499	1.65	2601	1.86

CFM	AVAILABLE EXTERNAL STATIC PRESSURE (in. wg)									
	1.2		1.4		1.6		1.8		2.0	
	rpm	bhp	rpm	bhp	rpm	bhp	rpm	bhp	rpm	bhp
1500	2124	1.02	2233	1.19	2337	1.36	2436	1.54	2532	1.73
1625	2190	1.12	2296	1.29	2398	1.47	2495	1.65	2589	1.85
1750	2257	1.22	2362	1.40	2462	1.59	2557	1.78	2648	1.97
1875	2327	1.34	2430	1.52	2528	1.72	2621	1.91	2710	2.11
2000	2398	1.46	2499	1.66	2595	1.85	2687	2.06	2775	2.27
2125	2471	1.60	2570	1.80	2665	2.01	2755	2.22	—	—
2250	2546	1.75	2643	1.96	2735	2.17	2824	2.39	—	—
2375	2622	1.91	2717	2.12	2807	2.34	—	—	—	—
2500	2699	2.08	2792	2.30	—	—	—	—	—	—

Standard/Medium Static 1420-2390 rpm, 1.44 maximum bhp

High Static 1420-2836 rpm, 2.43 maximum bhp

48FEFA06 Three Phase — Standard/Medium Static — 5 Ton Horizontal Supply (rpm - vdc)

CFM	AVAILABLE EXTERNAL STATIC PRESSURE (in. wg)									
	0.2		0.4		0.6		0.8		1.0	
	rpm	vdc	rpm	vdc	rpm	vdc	rpm	vdc	rpm	vdc
1500	1420	5.9	1593	6.7	1746	7.3	1883	7.9	2008	8.4
1625	1509	6.3	1673	7.0	1820	7.6	1954	8.2	2076	8.7
1750	1599	6.7	1755	7.3	1897	7.9	2026	8.5	2146	9.0
1875	1691	7.1	1839	7.7	1976	8.3	2102	8.8	2218	9.3
2000	1784	7.5	1924	8.1	2056	8.6	2178	9.1	2291	9.6
2125	1878	7.9	2011	8.4	2137	8.9	2256	9.4	2367	9.9
2250	1974	8.3	2099	8.8	2221	9.3	2335	9.8	—	—
2375	2070	8.7	2189	9.2	2305	9.6	—	—	—	—
2500	2166	9.1	2280	9.5	—	—	—	—	—	—

CFM	AVAILABLE EXTERNAL STATIC PRESSURE (in. wg)									
	1.2		1.4		1.6		1.8		2.0	
	rpm	vdc	rpm	vdc	rpm	vdc	rpm	vdc	rpm	vdc
1500	2124	8.9	2233	9.3	2337	9.8	—	—	—	—
1625	2190	9.2	2296	9.6	—	—	—	—	—	—
1750	2257	9.4	2362	9.9	—	—	—	—	—	—
1875	2327	9.7	—	—	—	—	—	—	—	—
2000	—	—	—	—	—	—	—	—	—	—
2125	—	—	—	—	—	—	—	—	—	—
2250	—	—	—	—	—	—	—	—	—	—
2375	—	—	—	—	—	—	—	—	—	—
2500	—	—	—	—	—	—	—	—	—	—

Standard/Medium Static 1420-2390 rpm

48FEFA06 Three Phase — High Static — 5 Ton Horizontal Supply (rpm - vdc)

CFM	AVAILABLE EXTERNAL STATIC PRESSURE (in. wg)									
	0.2		0.4		0.6		0.8		1.0	
	rpm	vdc	rpm	vdc	rpm	vdc	rpm	vdc	rpm	vdc
1500	1420	5.0	1593	5.6	1746	6.2	1883	6.6	2008	7.1
1625	1509	5.3	1673	5.9	1820	6.4	1954	6.9	2076	7.3
1750	1599	5.6	1755	6.2	1897	6.7	2026	7.1	2146	7.6
1875	1691	6.0	1839	6.5	1976	7.0	2102	7.4	2218	7.8
2000	1784	6.3	1924	6.8	2056	7.2	2178	7.7	2291	8.1
2125	1878	6.6	2011	7.1	2137	7.5	2256	8.0	2367	8.3
2250	1974	7.0	2099	7.4	2221	7.8	2335	8.2	2444	8.6
2375	2070	7.3	2189	7.7	2305	8.1	2416	8.5	2522	8.9
2500	2166	7.6	2280	8.0	2391	8.4	2499	8.8	2601	9.2

CFM	AVAILABLE EXTERNAL STATIC PRESSURE (in. wg)									
	1.2		1.4		1.6		1.8		2.0	
	rpm	vdc	rpm	vdc	rpm	vdc	rpm	vdc	rpm	vdc
1500	2124	7.5	2233	7.9	2337	8.2	2436	8.6	2532	8.9
1625	2190	7.7	2296	8.1	2398	8.5	2495	8.8	2589	9.1
1750	2257	8.0	2362	8.3	2462	8.7	2557	9.0	2648	9.3
1875	2327	8.2	2430	8.6	2528	8.9	2621	9.2	2710	9.6
2000	2398	8.5	2499	8.8	2595	9.2	2687	9.5	2775	9.8
2125	2471	8.7	2570	9.1	2665	9.4	2755	9.7	—	—
2250	2546	9.0	2643	9.3	2735	9.6	2824	10.0	—	—
2375	2622	9.2	2717	9.6	2807	9.9	—	—	—	—
2500	2699	9.5	2792	9.8	—	—	—	—	—	—

High Static 1420-2836 rpm

48FEFM07 Three Phase — 6 Ton Horizontal Supply (rpm - bhp)

CFM	AVAILABLE EXTERNAL STATIC PRESSURE (in. wg)									
	0.2		0.4		0.6		0.8		1.0	
	rpm	bhp	rpm	bhp	rpm	bhp	rpm	bhp	rpm	bhp
1800	1537	0.38	1685	0.51	1824	0.64	1953	0.79	2071	0.94
1950	1641	0.47	1778	0.59	1911	0.74	2035	0.89	2150	1.05
2100	1748	0.56	1874	0.69	2000	0.84	2119	1.00	2231	1.17
2250	1855	0.67	1973	0.81	2091	0.96	2206	1.13	2314	1.31
2400	1964	0.80	2074	0.94	2185	1.10	2294	1.27	2399	1.45
2550	2074	0.94	2176	1.08	2281	1.25	2385	1.43	2486	1.62
2700	2185	1.10	2281	1.25	2379	1.42	2478	1.60	2575	1.80
2850	2296	1.27	2386	1.43	2479	1.60	2573	1.79	2666	1.99
3000	2408	1.47	2493	1.63	2581	1.81	2670	2.00	2759	2.21

CFM	AVAILABLE EXTERNAL STATIC PRESSURE (in. wg)									
	1.2		1.4		1.6		1.8		2.0	
	rpm	bhp	rpm	bhp	rpm	bhp	rpm	bhp	rpm	bhp
1800	2182	1.10	2285	1.26	2382	1.43	2476	1.60	2564	1.78
1950	2258	1.21	2359	1.39	2455	1.56	2547	1.74	2634	1.93
2100	2337	1.35	2436	1.52	2530	1.71	2620	1.90	2706	2.09
2250	2417	1.49	2514	1.67	2606	1.86	2695	2.06	2780	2.26
2400	2499	1.64	2594	1.84	2685	2.04	2771	2.24	—	—
2550	2583	1.81	2676	2.02	2765	2.22	—	—	—	—
2700	2669	2.00	2759	2.21	—	—	—	—	—	—
2850	2757	2.20	—	—	—	—	—	—	—	—
3000	—	—	—	—	—	—	—	—	—	—

Standard/Medium Static 1537-2530 rpm, 1.76 maximum bhp

High Static 1537-2836 rpm, 2.43 maximum bhp

48FEFM07 Three Phase — Standard/Medium Static — 6 Ton Horizontal Supply (rpm - vdc)

CFM	AVAILABLE EXTERNAL STATIC PRESSURE (in. wg)									
	0.2		0.4		0.6		0.8		1.0	
	rpm	vdc	rpm	vdc	rpm	vdc	rpm	vdc	rpm	vdc
1800	1537	6.1	1685	6.7	1824	7.2	1953	7.7	2071	8.2
1950	1641	6.5	1778	7.0	1911	7.6	2035	8.0	2150	8.5
2100	1748	6.9	1874	7.4	2000	7.9	2119	8.4	2231	8.8
2250	1855	7.3	1973	7.8	2091	8.3	2206	8.7	2314	9.1
2400	1964	7.8	2074	8.2	2185	8.6	2294	9.1	2399	9.5
2550	2074	8.2	2176	8.6	2281	9.0	2385	9.4	2486	9.8
2700	2185	8.6	2281	9.0	2379	9.4	2478	9.8	—	—
2850	2296	9.1	2386	9.4	2479	9.8	—	—	—	—
3000	2408	9.5	2493	9.9	—	—	—	—	—	—

CFM	AVAILABLE EXTERNAL STATIC PRESSURE (in. wg)									
	1.2		1.4		1.6		1.8		2.0	
	rpm	vdc	rpm	vdc	rpm	vdc	rpm	vdc	rpm	vdc
1800	2182	8.6	2285	9.0	2382	9.4	2476	9.8	—	—
1950	2258	8.9	2359	9.3	2455	9.7	—	—	—	—
2100	2337	9.2	2436	9.6	2530	10.0	—	—	—	—
2250	2417	9.6	2514	9.9	—	—	—	—	—	—
2400	2499	9.9	—	—	—	—	—	—	—	—
2550	—	—	—	—	—	—	—	—	—	—
2700	—	—	—	—	—	—	—	—	—	—
2850	—	—	—	—	—	—	—	—	—	—
3000	—	—	—	—	—	—	—	—	—	—

Standard/Medium Static 1537-2530 rpm

48FEFM07 Three Phase — High Static — 6 Ton Horizontal Supply (rpm - vdc)

CFM	AVAILABLE EXTERNAL STATIC PRESSURE (in. wg)									
	0.2		0.4		0.6		0.8		1.0	
	rpm	vdc	rpm	vdc	rpm	vdc	rpm	vdc	rpm	vdc
1800	1537	5.4	1685	5.9	1824	6.4	1953	6.9	2071	7.3
1950	1641	5.8	1778	6.3	1911	6.7	2035	7.2	2150	7.6
2100	1748	6.2	1874	6.6	2000	7.1	2119	7.5	2231	7.9
2250	1855	6.5	1973	7.0	2091	7.4	2206	7.8	2314	8.2
2400	1964	6.9	2074	7.3	2185	7.7	2294	8.1	2399	8.5
2550	2074	7.3	2176	7.7	2281	8.0	2385	8.4	2486	8.8
2700	2185	7.7	2281	8.0	2379	8.4	2478	8.7	2575	9.1
2850	2296	8.1	2386	8.4	2479	8.7	2573	9.1	2666	9.4
3000	2408	8.5	2493	8.8	2581	9.1	2670	9.4	2759	9.7

CFM	AVAILABLE EXTERNAL STATIC PRESSURE (in. wg)									
	1.2		1.4		1.6		1.8		2.0	
	rpm	vdc	rpm	vdc	rpm	vdc	rpm	vdc	rpm	vdc
1800	2182	7.7	2285	8.1	2382	8.4	2476	8.7	2564	9.0
1950	2258	8.0	2359	8.3	2455	8.7	2547	9.0	2634	9.3
2100	2337	8.2	2436	8.6	2530	8.9	2620	9.2	2706	9.5
2250	2417	8.5	2514	8.9	2606	9.2	2695	9.5	2780	9.8
2400	2499	8.8	2594	9.1	2685	9.5	2771	9.8	—	—
2550	2583	9.1	2676	9.4	2765	9.7	—	—	—	—
2700	2669	9.4	2759	9.7	—	—	—	—	—	—
2850	2757	9.7	—	—	—	—	—	—	—	—
3000	—	—	—	—	—	—	—	—	—	—

High Static 1537-2836 rpm

50FE-A04 Single Phase — 3 Ton Vertical Supply (rpm - bhp)

CFM	AVAILABLE EXTERNAL STATIC PRESSURE (in. wg)									
	0.2		0.4		0.6		0.8		1.0	
	rpm	bhp	rpm	bhp	rpm	bhp	rpm	bhp	rpm	bhp
900	1040	0.08	1307	0.16	1526	0.25	1705	0.35	1859	0.45
975	1082	0.09	1336	0.17	1554	0.26	1736	0.36	1892	0.47
1050	1127	0.10	1366	0.18	1582	0.28	1766	0.38	1925	0.50
1125	1175	0.11	1398	0.19	1609	0.29	1795	0.40	1956	0.52
1200	1225	0.13	1434	0.21	1638	0.31	1822	0.42	1984	0.54
1275	1277	0.15	1472	0.22	1667	0.32	1849	0.44	2012	0.57
1350	1330	0.16	1514	0.24	1699	0.34	1878	0.46	2040	0.59
1425	1385	0.19	1557	0.26	1734	0.36	1906	0.48	2068	0.62
1500	1440	0.21	1603	0.29	1771	0.39	1937	0.51	2095	0.64

CFM	AVAILABLE EXTERNAL STATIC PRESSURE (in. wg)									
	1.2		1.4		1.6		1.8		2.0	
	rpm	bhp	rpm	bhp	rpm	bhp	rpm	bhp	rpm	bhp
900	1995	0.55	2119	0.66	2234	0.78	2342	0.89	2444	1.02
975	2031	0.58	2156	0.70	2272	0.82	2380	0.94	2482	1.06
1050	2065	0.61	2192	0.73	2309	0.86	2418	0.98	—	—
1125	2098	0.64	2226	0.77	2345	0.90	2454	1.03	—	—
1200	2129	0.67	2259	0.80	2379	0.94	2490	1.07	—	—
1275	2159	0.70	2291	0.84	2412	0.98	—	—	—	—
1350	2187	0.73	2321	0.87	2444	1.02	—	—	—	—
1425	2215	0.76	2350	0.90	2474	1.05	—	—	—	—
1500	2242	0.78	2378	0.94	—	—	—	—	—	—

Standard/Medium Static 1040-2190 rpm, 0.71 maximum bhp

High Static 1040-2490 rpm, 1.07 maximum bhp

50FE-A04 Single Phase — Standard/Medium Static — 3 Ton Vertical Supply (rpm - vdc)

CFM	AVAILABLE EXTERNAL STATIC PRESSURE (in. wg)									
	0.2		0.4		0.6		0.8		1.0	
	rpm	vdc	rpm	vdc	rpm	vdc	rpm	vdc	rpm	vdc
900	1040	4.7	1307	6.0	1526	7.0	1705	7.8	1859	8.5
975	1082	4.9	1336	6.1	1554	7.1	1736	7.9	1892	8.6
1050	1127	5.1	1366	6.2	1582	7.2	1766	8.1	1925	8.8
1125	1175	5.4	1398	6.4	1609	7.3	1795	8.2	1956	8.9
1200	1225	5.6	1434	6.5	1638	7.5	1822	8.3	1984	9.1
1275	1277	5.8	1472	6.7	1667	7.6	1849	8.4	2012	9.2
1350	1330	6.1	1514	6.9	1699	7.8	1878	8.6	2040	9.3
1425	1385	6.3	1557	7.1	1734	7.9	1906	8.7	2068	9.4
1500	1440	6.6	1603	7.3	1771	8.1	1937	8.8	2095	9.6

CFM	AVAILABLE EXTERNAL STATIC PRESSURE (in. wg)									
	1.2		1.4		1.6		1.8		2.0	
	rpm	vdc	rpm	vdc	rpm	vdc	rpm	vdc	rpm	vdc
900	1995	9.1	2119	9.7	—	—	—	—	—	—
975	2031	9.3	2156	9.8	—	—	—	—	—	—
1050	2065	9.4	—	—	—	—	—	—	—	—
1125	2098	9.6	—	—	—	—	—	—	—	—
1200	2129	9.7	—	—	—	—	—	—	—	—
1275	2159	9.9	—	—	—	—	—	—	—	—
1350	2187	10.0	—	—	—	—	—	—	—	—
1425	—	—	—	—	—	—	—	—	—	—
1500	—	—	—	—	—	—	—	—	—	—

Standard/Medium Static 1040-2190 rpm

Fan data (cont)

50FE-A04 Single Phase — High Static — 3 Ton Vertical Supply (rpm - vdc)

CFM	AVAILABLE EXTERNAL STATIC PRESSURE (in. wg)									
	0.2		0.4		0.6		0.8		1.0	
	rpm	vdc	rpm	vdc	rpm	vdc	rpm	vdc	rpm	vdc
900	1040	4.2	1307	5.2	1526	6.1	1705	6.8	1859	7.5
975	1082	4.3	1336	5.4	1554	6.2	1736	7.0	1892	7.6
1050	1127	4.5	1366	5.5	1582	6.4	1766	7.1	1925	7.7
1125	1175	4.7	1398	5.6	1609	6.5	1795	7.2	1956	7.9
1200	1225	4.9	1434	5.8	1638	6.6	1822	7.3	1984	8.0
1275	1277	5.1	1472	5.9	1667	6.7	1849	7.4	2012	8.1
1350	1330	5.3	1514	6.1	1699	6.8	1878	7.5	2040	8.2
1425	1385	5.6	1557	6.3	1734	7.0	1906	7.7	2068	8.3
1500	1440	5.8	1603	6.4	1771	7.1	1937	7.8	2095	8.4

CFM	AVAILABLE EXTERNAL STATIC PRESSURE (in. wg)									
	1.2		1.4		1.6		1.8		2.0	
	rpm	vdc	rpm	vdc	rpm	vdc	rpm	vdc	rpm	vdc
900	1995	8.0	2119	8.5	2234	9.0	2342	9.4	2444	9.8
975	2031	8.2	2156	8.7	2272	9.1	2380	9.6	2482	10.0
1050	2065	8.3	2192	8.8	2309	9.3	2418	9.7	—	—
1125	2098	8.4	2226	8.9	2345	9.4	2454	9.9	—	—
1200	2129	8.6	2259	9.1	2379	9.6	2490	10.0	—	—
1275	2159	8.7	2291	9.2	2412	9.7	—	—	—	—
1350	2187	8.8	2321	9.3	2444	9.8	—	—	—	—
1425	2215	8.9	2350	9.4	2474	9.9	—	—	—	—
1500	2242	9.0	2378	9.6	—	—	—	—	—	—

High Static 1040-2490 rpm

50FE-A04 Three Phase — 3 Ton Vertical Supply (rpm - bhp)

CFM	AVAILABLE EXTERNAL STATIC PRESSURE (in. wg)									
	0.2		0.4		0.6		0.8		1.0	
	rpm	bhp	rpm	bhp	rpm	bhp	rpm	bhp	rpm	bhp
900	1040	0.08	1307	0.16	1526	0.25	1705	0.35	1859	0.45
975	1082	0.09	1336	0.17	1554	0.26	1736	0.36	1892	0.47
1050	1127	0.10	1366	0.18	1582	0.28	1766	0.38	1925	0.50
1125	1175	0.11	1398	0.19	1609	0.29	1795	0.40	1956	0.52
1200	1225	0.13	1434	0.21	1638	0.31	1822	0.42	1984	0.54
1275	1277	0.15	1472	0.22	1667	0.32	1849	0.44	2012	0.57
1350	1330	0.16	1514	0.24	1699	0.34	1878	0.46	2040	0.59
1425	1385	0.19	1557	0.26	1734	0.36	1906	0.48	2068	0.62
1500	1440	0.21	1603	0.29	1771	0.39	1937	0.51	2095	0.64

CFM	AVAILABLE EXTERNAL STATIC PRESSURE (in. wg)									
	1.2		1.4		1.6		1.8		2.0	
	rpm	bhp	rpm	bhp	rpm	bhp	rpm	bhp	rpm	bhp
900	1995	0.55	2119	0.66	2234	0.78	2342	0.89	2444	1.02
975	2031	0.58	2156	0.70	2272	0.82	2380	0.94	2482	1.06
1050	2065	0.61	2192	0.73	2309	0.86	2418	0.98	—	—
1125	2098	0.64	2226	0.77	2345	0.90	2454	1.03	—	—
1200	2129	0.67	2259	0.80	2379	0.94	2490	1.07	—	—
1275	2159	0.70	2291	0.84	2412	0.98	—	—	—	—
1350	2187	0.73	2321	0.87	2444	1.02	—	—	—	—
1425	2215	0.76	2350	0.90	2474	1.05	—	—	—	—
1500	2242	0.78	2378	0.94	—	—	—	—	—	—

Standard/Medium Static 1040-2190 rpm, 0.71 maximum bhp

High Static 1040-2490 rpm, 1.07 maximum bhp

50FE-A04 Three Phase — Standard/Medium Static — 3 Ton Vertical Supply (rpm - vdc)

CFM	AVAILABLE EXTERNAL STATIC PRESSURE (in. wg)									
	0.2		0.4		0.6		0.8		1.0	
	rpm	vdc	rpm	vdc	rpm	vdc	rpm	vdc	rpm	vdc
900	1040	4.7	1307	6.0	1526	7.0	1705	7.8	1859	8.5
975	1082	4.9	1336	6.1	1554	7.1	1736	7.9	1892	8.6
1050	1127	5.1	1366	6.2	1582	7.2	1766	8.1	1925	8.8
1125	1175	5.4	1398	6.4	1609	7.3	1795	8.2	1956	8.9
1200	1225	5.6	1434	6.5	1638	7.5	1822	8.3	1984	9.1
1275	1277	5.8	1472	6.7	1667	7.6	1849	8.4	2012	9.2
1350	1330	6.1	1514	6.9	1699	7.8	1878	8.6	2040	9.3
1425	1385	6.3	1557	7.1	1734	7.9	1906	8.7	2068	9.4
1500	1440	6.6	1603	7.3	1771	8.1	1937	8.8	2095	9.6

CFM	AVAILABLE EXTERNAL STATIC PRESSURE (in. wg)									
	1.2		1.4		1.6		1.8		2.0	
	rpm	vdc	rpm	vdc	rpm	vdc	rpm	vdc	rpm	vdc
900	1995	9.1	2119	9.7	—	—	—	—	—	—
975	2031	9.3	2156	9.8	—	—	—	—	—	—
1050	2065	9.4	—	—	—	—	—	—	—	—
1125	2098	9.6	—	—	—	—	—	—	—	—
1200	2129	9.7	—	—	—	—	—	—	—	—
1275	2159	9.9	—	—	—	—	—	—	—	—
1350	2187	10.0	—	—	—	—	—	—	—	—
1425	—	—	—	—	—	—	—	—	—	—
1500	—	—	—	—	—	—	—	—	—	—

Standard/Medium Static 1040-2190 rpm

Fan data (cont)

50FE-A04 Three Phase — High Static — 3 Ton Vertical Supply (rpm - vdc)

CFM	AVAILABLE EXTERNAL STATIC PRESSURE (in. wg)									
	0.2		0.4		0.6		0.8		1.0	
	rpm	vdc	rpm	vdc	rpm	vdc	rpm	vdc	rpm	vdc
900	1040	4.2	1307	5.2	1526	6.1	1705	6.8	1859	7.5
975	1082	4.3	1336	5.4	1554	6.2	1736	7.0	1892	7.6
1050	1127	4.5	1366	5.5	1582	6.4	1766	7.1	1925	7.7
1125	1175	4.7	1398	5.6	1609	6.5	1795	7.2	1956	7.9
1200	1225	4.9	1434	5.8	1638	6.6	1822	7.3	1984	8.0
1275	1277	5.1	1472	5.9	1667	6.7	1849	7.4	2012	8.1
1350	1330	5.3	1514	6.1	1699	6.8	1878	7.5	2040	8.2
1425	1385	5.6	1557	6.3	1734	7.0	1906	7.7	2068	8.3
1500	1440	5.8	1603	6.4	1771	7.1	1937	7.8	2095	8.4

CFM	AVAILABLE EXTERNAL STATIC PRESSURE (in. wg)									
	1.2		1.4		1.6		1.8		2.0	
	rpm	vdc	rpm	vdc	rpm	vdc	rpm	vdc	rpm	vdc
900	1995	8.0	2119	8.5	2234	9.0	2342	9.4	2444	9.8
975	2031	8.2	2156	8.7	2272	9.1	2380	9.6	2482	10.0
1050	2065	8.3	2192	8.8	2309	9.3	2418	9.7	—	—
1125	2098	8.4	2226	8.9	2345	9.4	2454	9.9	—	—
1200	2129	8.6	2259	9.1	2379	9.6	2490	10.0	—	—
1275	2159	8.7	2291	9.2	2412	9.7	—	—	—	—
1350	2187	8.8	2321	9.3	2444	9.8	—	—	—	—
1425	2215	8.9	2350	9.4	2474	9.9	—	—	—	—
1500	2242	9.0	2378	9.6	—	—	—	—	—	—

High Static 1040-2490 rpm

Fan data (cont)

50FE-A05 Single Phase — 4 Ton Vertical Supply (rpm - bhp)

CFM	AVAILABLE EXTERNAL STATIC PRESSURE (in. wg)									
	0.2		0.4		0.6		0.8		1.0	
	rpm	bhp	rpm	bhp	rpm	bhp	rpm	bhp	rpm	bhp
1200	1120	0.15	1327	0.25	1506	0.37	1667	0.50	1814	0.65
1300	1178	0.18	1375	0.28	1549	0.40	1705	0.54	1849	0.69
1400	1238	0.21	1424	0.31	1593	0.44	1745	0.57	1886	0.73
1500	1300	0.24	1476	0.35	1639	0.47	1788	0.62	1925	0.77
1600	1365	0.27	1530	0.39	1688	0.52	1832	0.66	1966	0.82
1700	1430	0.31	1586	0.43	1737	0.56	1878	0.71	2009	0.87
1800	1497	0.36	1644	0.48	1789	0.61	1925	0.76	2053	0.93
1900	1565	0.41	1703	0.53	1842	0.67	1974	0.82	2099	0.99
2000	1633	0.46	1764	0.59	1897	0.73	2025	0.89	2146	1.05

CFM	AVAILABLE EXTERNAL STATIC PRESSURE (in. wg)									
	1.2		1.4		1.6		1.8		2.0	
	rpm	bhp	rpm	bhp	rpm	bhp	rpm	bhp	rpm	bhp
1200	1950	0.81	2077	0.97	2195	1.15	2307	1.33	2411	1.52
1300	1983	0.85	2108	1.02	2225	1.19	2336	1.38	2442	1.58
1400	2017	0.89	2140	1.06	2256	1.24	2367	1.43	—	—
1500	2053	0.93	2174	1.11	2289	1.29	2399	1.49	—	—
1600	2092	0.98	2210	1.16	2323	1.35	2431	1.55	—	—
1700	2132	1.04	2248	1.22	2359	1.41	—	—	—	—
1800	2173	1.10	2288	1.28	2397	1.47	—	—	—	—
1900	2217	1.16	2329	1.35	2436	1.54	—	—	—	—
2000	2262	1.23	2372	1.42	—	—	—	—	—	—

Standard/Medium Static 1120-2170 rpm, 1.06 maximum bhp

High Static 1120-2460 rpm, 1.53 maximum bhp

50FE-A05 Single Phase — Standard/Medium Static — 4 Ton Vertical Supply (rpm - vdc)

CFM	AVAILABLE EXTERNAL STATIC PRESSURE (in. wg)									
	0.2		0.4		0.6		0.8		1.0	
	rpm	vdc	rpm	vdc	rpm	vdc	rpm	vdc	rpm	vdc
1200	1120	5.2	1327	6.1	1506	6.9	1667	7.7	1814	8.4
1300	1178	5.4	1375	6.3	1549	7.1	1705	7.9	1849	8.5
1400	1238	5.7	1424	6.6	1593	7.3	1745	8.0	1886	8.7
1500	1300	6.0	1476	6.8	1639	7.6	1788	8.2	1925	8.9
1600	1365	6.3	1530	7.1	1688	7.8	1832	8.4	1966	9.1
1700	1430	6.6	1586	7.3	1737	8.0	1878	8.7	2009	9.3
1800	1497	6.9	1644	7.6	1789	8.2	1925	8.9	2053	9.5
1900	1565	7.2	1703	7.8	1842	8.5	1974	9.1	2099	9.7
2000	1633	7.5	1764	8.1	1897	8.7	2025	9.3	2146	9.9

CFM	AVAILABLE EXTERNAL STATIC PRESSURE (in. wg)									
	1.2		1.4		1.6		1.8		2.0	
	rpm	vdc	rpm	vdc	rpm	vdc	rpm	vdc	rpm	vdc
1200	1950	9.0	2077	9.6	—	—	—	—	—	—
1300	1983	9.1	2108	9.7	—	—	—	—	—	—
1400	2017	9.3	2140	9.9	—	—	—	—	—	—
1500	2053	9.5	—	—	—	—	—	—	—	—
1600	2092	9.6	—	—	—	—	—	—	—	—
1700	2132	9.8	—	—	—	—	—	—	—	—
1800	—	—	—	—	—	—	—	—	—	—
1900	—	—	—	—	—	—	—	—	—	—
2000	—	—	—	—	—	—	—	—	—	—

Standard/Medium Static 1120-2170 rpm

Fan data (cont)

50FE-A05 Single Phase — High Static — 4 Ton Vertical Supply (rpm - vdc)

CFM	AVAILABLE EXTERNAL STATIC PRESSURE (in. wg)									
	0.2		0.4		0.6		0.8		1.0	
	rpm	vdc	rpm	vdc	rpm	vdc	rpm	vdc	rpm	vdc
1200	1120	4.6	1327	5.4	1506	6.1	1667	6.8	1814	7.4
1300	1178	4.8	1375	5.6	1549	6.3	1705	6.9	1849	7.5
1400	1238	5.0	1424	5.8	1593	6.5	1745	7.1	1886	7.7
1500	1300	5.3	1476	6.0	1639	6.7	1788	7.3	1925	7.8
1600	1365	5.5	1530	6.2	1688	6.9	1832	7.4	1966	8.0
1700	1430	5.8	1586	6.4	1737	7.1	1878	7.6	2009	8.2
1800	1497	6.1	1644	6.7	1789	7.3	1925	7.8	2053	8.3
1900	1565	6.4	1703	6.9	1842	7.5	1974	8.0	2099	8.5
2000	1633	6.6	1764	7.2	1897	7.7	2025	8.2	2146	8.7

CFM	AVAILABLE EXTERNAL STATIC PRESSURE (in. wg)									
	1.2		1.4		1.6		1.8		2.0	
	rpm	vdc	rpm	vdc	rpm	vdc	rpm	vdc	rpm	vdc
1200	1950	7.9	2077	8.4	2195	8.9	2307	9.4	2411	9.8
1300	1983	8.1	2108	8.6	2225	9.0	2336	9.5	2442	9.9
1400	2017	8.2	2140	8.7	2256	9.2	2367	9.6	—	—
1500	2053	8.3	2174	8.8	2289	9.3	2399	9.8	—	—
1600	2092	8.5	2210	9.0	2323	9.4	2431	9.9	—	—
1700	2132	8.7	2248	9.1	2359	9.6	—	—	—	—
1800	2173	8.8	2288	9.3	2397	9.7	—	—	—	—
1900	2217	9.0	2329	9.5	2436	9.9	—	—	—	—
2000	2262	9.2	2372	9.6	—	—	—	—	—	—

High Static 1120-2460 rpm

50FE-A05 Three Phase — 4 Ton Vertical Supply (rpm - bhp)

CFM	AVAILABLE EXTERNAL STATIC PRESSURE (in. wg)									
	0.2		0.4		0.6		0.8		1.0	
	rpm	bhp	rpm	bhp	rpm	bhp	rpm	bhp	rpm	bhp
1200	1115	0.15	1332	0.26	1513	0.37	1665	0.50	1801	0.63
1300	1174	0.17	1376	0.28	1557	0.41	1709	0.54	1843	0.67
1400	1236	0.20	1422	0.31	1601	0.44	1754	0.58	1887	0.72
1500	1300	0.24	1471	0.34	1644	0.48	1798	0.62	1932	0.77
1600	1366	0.27	1524	0.38	1688	0.51	1841	0.67	1976	0.82
1700	1433	0.31	1579	0.42	1734	0.56	1884	0.71	2020	0.88
1800	1501	0.36	1637	0.47	1783	0.60	1928	0.76	2063	0.93
1900	1570	0.41	1698	0.52	1834	0.66	1973	0.82	2106	0.99
2000	1640	0.47	1761	0.58	1888	0.71	2020	0.88	2150	1.06

CFM	AVAILABLE EXTERNAL STATIC PRESSURE (in. wg)									
	1.2		1.4		1.6		1.8		2.0	
	rpm	bhp	rpm	bhp	rpm	bhp	rpm	bhp	rpm	bhp
1200	1931	0.78	2061	0.95	2200	1.15	2363	1.43	2617	1.94
1300	1967	0.82	2087	0.98	2207	1.16	2332	1.37	2471	1.62
1400	2009	0.87	2123	1.03	2234	1.20	2345	1.38	2460	1.60
1500	2052	0.93	2164	1.09	2271	1.25	2375	1.43	2478	1.63
1600	2097	0.99	2208	1.15	2312	1.32	2412	1.50	2510	1.69
1700	2141	1.05	2252	1.22	2356	1.39	2454	1.58	2548	1.76
1800	2185	1.11	2297	1.29	2400	1.47	2497	1.66	2590	1.85
1900	2229	1.18	2341	1.36	2445	1.55	2542	1.75	2634	1.94
2000	2272	1.25	2385	1.44	2489	1.64	2586	1.84	—	—

Standard/Medium Static 1115-2170 rpm, 1.06 maximum bhp

High Static 1115-2660 rpm, 1.96 maximum bhp

50FE-A05 Three Phase — Standard/Medium Static — 4 Ton Vertical Supply (rpm - vdc)

CFM	AVAILABLE EXTERNAL STATIC PRESSURE (in. wg)									
	0.2		0.4		0.6		0.8		1.0	
	rpm	vdc	rpm	vdc	rpm	vdc	rpm	vdc	rpm	vdc
1200	1115	5.1	1332	6.1	1513	7.0	1665	7.7	1801	8.3
1300	1174	5.4	1376	6.3	1557	7.2	1709	7.9	1843	8.5
1400	1236	5.7	1422	6.6	1601	7.4	1754	8.1	1887	8.7
1500	1300	6.0	1471	6.8	1644	7.6	1798	8.3	1932	8.9
1600	1366	6.3	1524	7.0	1688	7.8	1841	8.5	1976	9.1
1700	1433	6.6	1579	7.3	1734	8.0	1884	8.7	2020	9.3
1800	1501	6.9	1637	7.5	1783	8.2	1928	8.9	2063	9.5
1900	1570	7.2	1698	7.8	1834	8.5	1973	9.1	2106	9.7
2000	1640	7.6	1761	8.1	1888	8.7	2020	9.3	2150	9.9

CFM	AVAILABLE EXTERNAL STATIC PRESSURE (in. wg)									
	1.2		1.4		1.6		1.8		2.0	
	rpm	vdc	rpm	vdc	rpm	vdc	rpm	vdc	rpm	vdc
1200	1931	8.9	2061	9.5	—	—	—	—	—	—
1300	1967	9.1	2087	9.6	—	—	—	—	—	—
1400	2009	9.3	2123	9.8	—	—	—	—	—	—
1500	2052	9.5	—	—	—	—	—	—	—	—
1600	2097	9.7	—	—	—	—	—	—	—	—
1700	2141	9.9	—	—	—	—	—	—	—	—
1800	—	—	—	—	—	—	—	—	—	—
1900	—	—	—	—	—	—	—	—	—	—
2000	—	—	—	—	—	—	—	—	—	—

Standard/Medium Static 1115-2170 rpm

50FE-A05 Three Phase — High Static — 4 Ton Vertical Supply (rpm - vdc)

CFM	AVAILABLE EXTERNAL STATIC PRESSURE (in. wg)									
	0.2		0.4		0.6		0.8		1.0	
	rpm	vdc	rpm	vdc	rpm	vdc	rpm	vdc	rpm	vdc
1200	1115	4.2	1332	5.0	1513	5.7	1665	6.3	1801	6.8
1300	1174	4.4	1376	5.2	1557	5.9	1709	6.4	1843	6.9
1400	1236	4.6	1422	5.3	1601	6.0	1754	6.6	1887	7.1
1500	1300	4.9	1471	5.5	1644	6.2	1798	6.8	1932	7.3
1600	1366	5.1	1524	5.7	1688	6.3	1841	6.9	1976	7.4
1700	1433	5.4	1579	5.9	1734	6.5	1884	7.1	2020	7.6
1800	1501	5.6	1637	6.2	1783	6.7	1928	7.2	2063	7.8
1900	1570	5.9	1698	6.4	1834	6.9	1973	7.4	2106	7.9
2000	1640	6.2	1761	6.6	1888	7.1	2020	7.6	2150	8.1

CFM	AVAILABLE EXTERNAL STATIC PRESSURE (in. wg)									
	1.2		1.4		1.6		1.8		2.0	
	rpm	vdc	rpm	vdc	rpm	vdc	rpm	vdc	rpm	vdc
1200	1931	7.3	2061	7.7	2200	8.3	2363	8.9	2617	9.8
1300	1967	7.4	2087	7.8	2207	8.3	2332	8.8	2471	9.3
1400	2009	7.6	2123	8.0	2234	8.4	2345	8.8	2460	9.2
1500	2052	7.7	2164	8.1	2271	8.5	2375	8.9	2478	9.3
1600	2097	7.9	2208	8.3	2312	8.7	2412	9.1	2510	9.4
1700	2141	8.0	2252	8.5	2356	8.9	2454	9.2	2548	9.6
1800	2185	8.2	2297	8.6	2400	9.0	2497	9.4	2590	9.7
1900	2229	8.4	2341	8.8	2445	9.2	2542	9.6	2634	9.9
2000	2272	8.5	2385	9.0	2489	9.4	2586	9.7	—	—

High Static 1115-2660 rpm

50FE-A06 Single Phase — 5 Ton Vertical Supply (rpm - bhp)

CFM	AVAILABLE EXTERNAL STATIC PRESSURE (in. wg)									
	0.2		0.4		0.6		0.8		1.0	
	rpm	bhp	rpm	bhp	rpm	bhp	rpm	bhp	rpm	bhp
1500	1301	0.24	1477	0.35	1639	0.47	1788	0.62	1925	0.77
1625	1381	0.28	1544	0.40	1700	0.53	1843	0.67	1976	0.83
1750	1463	0.34	1615	0.45	1763	0.59	1901	0.74	2031	0.90
1875	1548	0.40	1688	0.51	1829	0.65	1962	0.81	2088	0.97
2000	1633	0.46	1764	0.59	1897	0.73	2025	0.89	2147	1.06
2125	1720	0.54	1842	0.67	1968	0.81	2090	0.97	2208	1.15
2250	1808	0.63	1922	0.75	2040	0.90	2158	1.07	2271	1.24
2375	1897	0.72	2003	0.85	2115	1.00	2227	1.17	2336	1.35
2500	1987	0.83	2086	0.96	2192	1.12	2299	1.29	2403	1.47

CFM	AVAILABLE EXTERNAL STATIC PRESSURE (in. wg)									
	1.2		1.4		1.6		1.8		2.0	
	rpm	bhp	rpm	bhp	rpm	bhp	rpm	bhp	rpm	bhp
1500	2053	0.93	2174	1.11	2289	1.29	2398	1.49	2502	1.69
1625	2101	1.00	2220	1.18	2332	1.36	2439	1.56	2542	1.77
1750	2152	1.07	2268	1.25	2378	1.44	2483	1.64	2584	1.85
1875	2206	1.15	2318	1.33	2426	1.53	2529	1.73	2628	1.94
2000	2262	1.23	2372	1.42	2477	1.62	2578	1.83	—	—
2125	2320	1.33	2427	1.52	2530	1.72	2628	1.93	—	—
2250	2380	1.43	2485	1.63	2585	1.83	—	—	—	—
2375	2442	1.54	2544	1.75	2642	1.96	—	—	—	—
2500	2506	1.67	2605	1.87	—	—	—	—	—	—

Standard/Medium Static 1301-2390 rpm, 1.44 maximum bhp

High Static 1262-2660 rpm, 1.96 maximum bhp

50FE-A06 Single Phase — Standard/Medium Static — 3 Ton Vertical Supply (rpm - vdc)

CFM	AVAILABLE EXTERNAL STATIC PRESSURE (in. wg)									
	0.2		0.4		0.6		0.8		1.0	
	rpm	vdc	rpm	vdc	rpm	vdc	rpm	vdc	rpm	vdc
1500	1301	5.4	1476	6.2	1639	6.9	1788	7.5	1925	8.1
1625	1381	5.8	1545	6.5	1700	7.1	1843	7.7	1976	8.3
1750	1463	6.1	1615	6.8	1763	7.4	1901	8.0	2031	8.5
1875	1548	6.5	1688	7.1	1828	7.6	1962	8.2	2087	8.7
2000	1633	6.8	1764	7.4	1897	7.9	2025	8.5	2146	9.0
2125	1720	7.2	1842	7.7	1967	8.2	2090	8.7	2208	9.2
2250	1808	7.6	1922	8.0	2040	8.5	2157	9.0	2271	9.5
2375	1897	7.9	2003	8.4	2115	8.8	2227	9.3	2336	9.8
2500	1987	8.3	2086	8.7	2191	9.2	2298	9.6	—	—

CFM	AVAILABLE EXTERNAL STATIC PRESSURE (in. wg)									
	1.2		1.4		1.6		1.8		2.0	
	rpm	vdc	rpm	vdc	rpm	vdc	rpm	vdc	rpm	vdc
1500	2053	8.6	2174	9.1	2289	9.6	—	—	—	—
1625	2101	8.8	2220	9.3	2332	9.8	—	—	—	—
1750	2152	9.0	2268	9.5	2378	9.9	—	—	—	—
1875	2206	9.2	2318	9.7	—	—	—	—	—	—
2000	2262	9.5	2372	9.9	—	—	—	—	—	—
2125	2320	9.7	—	—	—	—	—	—	—	—
2250	2380	10.0	—	—	—	—	—	—	—	—
2375	—	—	—	—	—	—	—	—	—	—
2500	—	—	—	—	—	—	—	—	—	—

Standard/Medium Static 1301-2390 rpm

Fan data (cont)

50FE-A06 Single Phase — High Static — 5 Ton Vertical Supply (rpm - vdc)

CFM	AVAILABLE EXTERNAL STATIC PRESSURE (in. wg)									
	0.2		0.4		0.6		0.8		1.0	
	rpm	vdc	rpm	vdc	rpm	vdc	rpm	vdc	rpm	vdc
1500	1301	4.9	1477	5.6	1639	6.2	1788	6.7	1925	7.2
1625	1381	5.2	1544	5.8	1700	6.4	1843	6.9	1976	7.4
1750	1463	5.5	1615	6.1	1763	6.6	1901	7.1	2031	7.6
1875	1548	5.8	1688	6.3	1829	6.9	1962	7.4	2088	7.8
2000	1633	6.1	1764	6.6	1897	7.1	2025	7.6	2147	8.1
2125	1720	6.5	1842	6.9	1968	7.4	2090	7.9	2208	8.3
2250	1808	6.8	1922	7.2	2040	7.7	2158	8.1	2271	8.5
2375	1897	7.1	2003	7.5	2115	8.0	2227	8.4	2336	8.8
2500	1987	7.5	2086	7.8	2192	8.2	2299	8.6	2403	9.0

CFM	AVAILABLE EXTERNAL STATIC PRESSURE (in. wg)									
	1.2		1.4		1.6		1.8		2.0	
	rpm	vdc	rpm	vdc	rpm	vdc	rpm	vdc	rpm	vdc
1500	2053	7.7	2174	8.2	2289	8.6	2398	9.0	2502	9.4
1625	2101	7.9	2220	8.3	2332	8.8	2439	9.2	2542	9.6
1750	2152	8.1	2268	8.5	2378	8.9	2483	9.3	2584	9.7
1875	2206	8.3	2318	8.7	2426	9.1	2529	9.5	2628	9.9
2000	2262	8.5	2372	8.9	2477	9.3	2578	9.7	—	—
2125	2320	8.7	2427	9.1	2530	9.5	2628	9.9	—	—
2250	2380	8.9	2485	9.3	2585	9.7	—	—	—	—
2375	2442	9.2	2544	9.6	2642	9.9	—	—	—	—
2500	2506	9.4	2605	9.8	—	—	—	—	—	—

High Static 1301-2660 rpm

50FE-A06 Three Phase — 5 Ton Vertical Supply (rpm - bhp)

CFM	AVAILABLE EXTERNAL STATIC PRESSURE (in. wg)									
	0.2		0.4		0.6		0.8		1.0	
	rpm	bhp	rpm	bhp	rpm	bhp	rpm	bhp	rpm	bhp
1500	1301	0.24	1477	0.35	1639	0.47	1788	0.62	1925	0.77
1625	1381	0.28	1545	0.40	1700	0.53	1843	0.67	1977	0.83
1750	1463	0.34	1615	0.45	1763	0.59	1902	0.74	2031	0.90
1875	1548	0.40	1688	0.51	1829	0.65	1962	0.81	2088	0.97
2000	1633	0.46	1764	0.59	1897	0.73	2025	0.89	2147	1.06
2125	1720	0.54	1842	0.67	1968	0.81	2090	0.97	2208	1.15
2250	1809	0.63	1922	0.75	2040	0.90	2158	1.07	2271	1.24
2375	1897	0.72	2003	0.85	2115	1.00	2227	1.17	2336	1.35
2500	1987	0.83	2086	0.96	2192	1.12	2299	1.29	2403	1.47

CFM	AVAILABLE EXTERNAL STATIC PRESSURE (in. wg)									
	1.2		1.4		1.6		1.8		2.0	
	rpm	bhp	rpm	bhp	rpm	bhp	rpm	bhp	rpm	bhp
1500	2053	0.93	2174	1.11	2289	1.29	2398	1.49	2502	1.69
1625	2102	1.00	2220	1.18	2332	1.36	2439	1.56	2542	1.77
1750	2153	1.07	2268	1.25	2378	1.44	2483	1.64	2584	1.85
1875	2206	1.15	2319	1.33	2426	1.53	2529	1.73	2628	1.94
2000	2262	1.23	2372	1.42	2477	1.62	2578	1.83	2675	2.04
2125	2320	1.33	2427	1.52	2530	1.72	2629	1.93	2724	2.15
2250	2380	1.43	2485	1.63	2585	1.83	2682	2.05	2775	2.27
2375	2443	1.55	2544	1.75	2642	1.96	2737	2.17	2828	2.40
2500	2506	1.67	2605	1.87	2701	2.09	2794	2.31	—	—

Standard/Medium Static 1301-2390 rpm, 1.44 maximum bhp

High Static 1301-2836 rpm, 2.43 maximum bhp

50FE-A06 Three Phase — Standard/Medium Static — 5 Ton Vertical Supply (rpm - vdc)

CFM	AVAILABLE EXTERNAL STATIC PRESSURE (in. wg)									
	0.2		0.4		0.6		0.8		1.0	
	rpm	vdc	rpm	vdc	rpm	vdc	rpm	vdc	rpm	vdc
1500	1301	5.4	1477	6.2	1639	6.9	1788	7.5	1925	8.1
1625	1381	5.8	1545	6.5	1700	7.1	1843	7.7	1977	8.3
1750	1463	6.1	1615	6.8	1763	7.4	1902	8.0	2031	8.5
1875	1548	6.5	1688	7.1	1829	7.7	1962	8.2	2088	8.7
2000	1633	6.8	1764	7.4	1897	7.9	2025	8.5	2147	9.0
2125	1720	7.2	1842	7.7	1968	8.2	2090	8.7	2208	9.2
2250	1809	7.6	1922	8.0	2040	8.5	2158	9.0	2271	9.5
2375	1897	7.9	2003	8.4	2115	8.8	2227	9.3	2336	9.8
2500	1987	8.3	2086	8.7	2192	9.2	2299	9.6	—	—

CFM	AVAILABLE EXTERNAL STATIC PRESSURE (in. wg)									
	1.2		1.4		1.6		1.8		2.0	
	rpm	vdc	rpm	vdc	rpm	vdc	rpm	vdc	rpm	vdc
1500	2053	8.6	2174	9.1	2289	9.6	—	—	—	—
1625	2102	8.8	2220	9.3	2332	9.8	—	—	—	—
1750	2153	9.0	2268	9.5	2378	9.9	—	—	—	—
1875	2206	9.2	2319	9.7	—	—	—	—	—	—
2000	2262	9.5	2372	9.9	—	—	—	—	—	—
2125	2320	9.7	—	—	—	—	—	—	—	—
2250	2380	10.0	—	—	—	—	—	—	—	—
2375	—	—	—	—	—	—	—	—	—	—
2500	—	—	—	—	—	—	—	—	—	—

Standard/Medium Static 1301-2390 rpm

50FE-A06 Three Phase — High Static — 5 Ton Vertical Supply (rpm - vdc)

CFM	AVAILABLE EXTERNAL STATIC PRESSURE (in. wg)									
	0.2		0.4		0.6		0.8		1.0	
	rpm	vdc	rpm	vdc	rpm	vdc	rpm	vdc	rpm	vdc
1500	1301	4.6	1477	5.2	1639	5.8	1788	6.3	1925	6.8
1625	1381	4.9	1545	5.4	1700	6.0	1843	6.5	1977	7.0
1750	1463	5.2	1615	5.7	1763	6.2	1902	6.7	2031	7.2
1875	1548	5.5	1688	6.0	1829	6.4	1962	6.9	2088	7.4
2000	1633	5.8	1764	6.2	1897	6.7	2025	7.1	2147	7.6
2125	1720	6.1	1842	6.5	1968	6.9	2090	7.4	2208	7.8
2250	1809	6.4	1922	6.8	2040	7.2	2158	7.6	2271	8.0
2375	1897	6.7	2003	7.1	2115	7.5	2227	7.9	2336	8.2
2500	1987	7.0	2086	7.4	2192	7.7	2299	8.1	2403	8.5

CFM	AVAILABLE EXTERNAL STATIC PRESSURE (in. wg)									
	1.2		1.4		1.6		1.8		2.0	
	rpm	vdc	rpm	vdc	rpm	vdc	rpm	vdc	rpm	vdc
1500	2053	7.2	2174	7.7	2289	8.1	2398	8.5	2502	8.8
1625	2102	7.4	2220	7.8	2332	8.2	2439	8.6	2542	9.0
1750	2153	7.6	2268	8.0	2378	8.4	2483	8.8	2584	9.1
1875	2206	7.8	2319	8.2	2426	8.6	2529	8.9	2628	9.3
2000	2262	8.0	2372	8.4	2477	8.7	2578	9.1	2675	9.4
2125	2320	8.2	2427	8.6	2530	8.9	2629	9.3	2724	9.6
2250	2380	8.4	2485	8.8	2585	9.1	2682	9.5	2775	9.8
2375	2443	8.6	2544	9.0	2642	9.3	2737	9.7	2828	10.0
2500	2506	8.8	2605	9.2	2701	9.5	2794	9.9	—	—

High Static 1301-2836 rpm

50FE-M07 Three Phase — 6 Ton Vertical Supply (rpm - bhp)

CFM	AVAILABLE EXTERNAL STATIC PRESSURE (in. wg)									
	0.2		0.4		0.6		0.8		1.0	
	rpm	bhp	rpm	bhp	rpm	bhp	rpm	bhp	rpm	bhp
1800	1423	0.30	1550	0.39	1682	0.50	1820	0.64	1955	0.79
1950	1521	0.37	1638	0.46	1758	0.57	1883	0.70	2011	0.86
2100	1620	0.45	1730	0.54	1839	0.65	1953	0.78	2071	0.93
2250	1720	0.53	1824	0.64	1924	0.75	2029	0.88	2137	1.02
2400	1820	0.63	1919	0.74	2013	0.85	2109	0.98	2209	1.13
2550	1921	0.74	2016	0.86	2105	0.98	2194	1.11	2286	1.25
2700	2022	0.86	2113	0.99	2198	1.11	2282	1.24	2368	1.39
2850	2123	1.00	2212	1.13	2293	1.26	2373	1.40	2453	1.54
3000	2225	1.15	2311	1.29	2389	1.42	2465	1.56	2541	1.71

CFM	AVAILABLE EXTERNAL STATIC PRESSURE (in. wg)									
	1.2		1.4		1.6		1.8		2.0	
	rpm	bhp	rpm	bhp	rpm	bhp	rpm	bhp	rpm	bhp
1800	2079	0.95	2192	1.11	2296	1.28	2393	1.45	2485	1.62
1950	2133	1.02	2247	1.19	2353	1.37	2451	1.55	2543	1.73
2100	2189	1.10	2301	1.28	2408	1.47	2507	1.66	2601	1.85
2250	2248	1.19	2357	1.37	2462	1.57	2562	1.76	2656	1.97
2400	2312	1.30	2416	1.48	2517	1.67	2616	1.88	2711	2.09
2550	2381	1.41	2479	1.60	2576	1.79	2672	2.00	2765	2.21
2700	2456	1.55	2546	1.73	2638	1.92	2730	2.13	2821	2.35
2850	2535	1.70	2619	1.88	2705	2.07	2793	2.28	—	—
3000	2618	1.87	2696	2.05	2777	2.24	—	—	—	—

Standard/Medium Static 1423-2530 rpm, 1.76 maximum bhp

High Static 1423-2836 rpm, 2.43 maximum bhp

50FE-M07 Three Phase — Standard/Medium Static — 6 Ton Vertical Supply (rpm - vdc)

CFM	AVAILABLE EXTERNAL STATIC PRESSURE (in. wg)									
	0.2		0.4		0.6		0.8		1.0	
	rpm	vdc	rpm	vdc	rpm	vdc	rpm	vdc	rpm	vdc
1800	1423	5.6	1550	6.1	1682	6.6	1820	7.2	1955	7.7
1950	1521	6.0	1638	6.5	1758	6.9	1883	7.4	2011	7.9
2100	1620	6.4	1730	6.8	1839	7.3	1953	7.7	2071	8.2
2250	1720	6.8	1824	7.2	1924	7.6	2029	8.0	2137	8.4
2400	1820	7.2	1919	7.6	2013	8.0	2109	8.3	2209	8.7
2550	1921	7.6	2016	8.0	2105	8.3	2194	8.7	2286	9.0
2700	2022	8.0	2113	8.4	2198	8.7	2282	9.0	2368	9.4
2850	2123	8.4	2212	8.7	2293	9.1	2373	9.4	2453	9.7
3000	2225	8.8	2311	9.1	2389	9.4	2465	9.7	—	—

CFM	AVAILABLE EXTERNAL STATIC PRESSURE (in. wg)									
	1.2		1.4		1.6		1.8		2.0	
	rpm	vdc	rpm	vdc	rpm	vdc	rpm	vdc	rpm	vdc
1800	2079	8.2	2192	8.7	2296	9.1	2393	9.5	2485	9.8
1950	2133	8.4	2247	8.9	2353	9.3	2451	9.7	—	—
2100	2189	8.7	2301	9.1	2408	9.5	2507	9.9	—	—
2250	2248	8.9	2357	9.3	2462	9.7	—	—	—	—
2400	2312	9.1	2416	9.5	2517	9.9	—	—	—	—
2550	2381	9.4	2479	9.8	—	—	—	—	—	—
2700	2456	9.7	—	—	—	—	—	—	—	—
2850	—	—	—	—	—	—	—	—	—	—
3000	—	—	—	—	—	—	—	—	—	—

Standard/Medium Static 1423-2530 rpm

Fan data (cont)

50FE-M07 Three Phase — High Static — 6 Ton Vertical Supply (rpm - vdc)

CFM	AVAILABLE EXTERNAL STATIC PRESSURE (in. wg)									
	0.2		0.4		0.6		0.8		1.0	
	rpm	vdc	rpm	vdc	rpm	vdc	rpm	vdc	rpm	vdc
1800	1423	5.0	1550	5.5	1682	5.9	1820	6.4	1955	6.9
1950	1521	5.4	1638	5.8	1758	6.2	1883	6.6	2011	7.1
2100	1620	5.7	1730	6.1	1839	6.5	1953	6.9	2071	7.3
2250	1720	6.1	1824	6.4	1924	6.8	2029	7.2	2137	7.5
2400	1820	6.4	1919	6.8	2013	7.1	2109	7.4	2209	7.8
2550	1921	6.8	2016	7.1	2105	7.4	2194	7.7	2286	8.1
2700	2022	7.1	2113	7.5	2198	7.8	2282	8.0	2368	8.3
2850	2123	7.5	2212	7.8	2293	8.1	2373	8.4	2453	8.6
3000	2225	7.8	2311	8.1	2389	8.4	2465	8.7	2541	9.0

CFM	AVAILABLE EXTERNAL STATIC PRESSURE (in. wg)									
	1.2		1.4		1.6		1.8		2.0	
	rpm	vdc	rpm	vdc	rpm	vdc	rpm	vdc	rpm	vdc
1800	2079	7.3	2192	7.7	2296	8.1	2393	8.4	2485	8.8
1950	2133	7.5	2247	7.9	2353	8.3	2451	8.6	2543	9.0
2100	2189	7.7	2301	8.1	2408	8.5	2507	8.8	2601	9.2
2250	2248	7.9	2357	8.3	2462	8.7	2562	9.0	2656	9.4
2400	2312	8.2	2416	8.5	2517	8.9	2616	9.2	2711	9.6
2550	2381	8.4	2479	8.7	2576	9.1	2672	9.4	2765	9.7
2700	2456	8.7	2546	9.0	2638	9.3	2730	9.6	2821	9.9
2850	2535	8.9	2619	9.2	2705	9.5	2793	9.8	—	—
3000	2618	9.2	2696	9.5	2777	9.8	—	—	—	—

High Static 1423-2836 rpm

50FE-A04 Single Phase — 3 Ton Horizontal Supply (rpm - bhp)

CFM	AVAILABLE EXTERNAL STATIC PRESSURE (in. wg)									
	0.2		0.4		0.6		0.8		1.0	
	rpm	bhp	rpm	bhp	rpm	bhp	rpm	bhp	rpm	bhp
900	1017	0.07	1284	0.15	1501	0.24	1684	0.33	1843	0.44
975	1055	0.08	1311	0.16	1527	0.25	1711	0.35	1871	0.46
1050	1096	0.09	1340	0.17	1553	0.26	1737	0.36	1899	0.48
1125	1140	0.10	1371	0.18	1580	0.27	1763	0.38	1925	0.50
1200	1186	0.12	1404	0.19	1608	0.29	1789	0.40	1951	0.52
1275	1236	0.13	1440	0.21	1637	0.31	1816	0.42	1977	0.54
1350	1286	0.15	1477	0.22	1666	0.32	1843	0.44	2004	0.56
1425	1338	0.17	1517	0.24	1698	0.34	1871	0.46	2030	0.58
1500	1391	0.19	1559	0.26	1733	0.36	1900	0.48	2057	0.61

CFM	AVAILABLE EXTERNAL STATIC PRESSURE (in. wg)									
	1.2		1.4		1.6		1.8		2.0	
	rpm	bhp	rpm	bhp	rpm	bhp	rpm	bhp	rpm	bhp
900	1984	0.54	2113	0.66	2231	0.77	2342	0.89	2446	1.02
975	2014	0.57	2144	0.69	2264	0.81	2376	0.93	2481	1.06
1050	2043	0.59	2174	0.72	2295	0.84	2408	0.97	—	—
1125	2071	0.62	2203	0.74	2325	0.88	2439	1.01	—	—
1200	2098	0.64	2231	0.77	2354	0.91	2469	1.05	—	—
1275	2124	0.67	2258	0.80	2382	0.94	—	—	—	—
1350	2150	0.69	2285	0.83	2410	0.97	—	—	—	—
1425	2176	0.72	2311	0.86	2436	1.01	—	—	—	—
1500	2202	0.74	2337	0.89	2462	1.04	—	—	—	—

Standard/Medium Static 1017-2190 rpm, 0.71 maximum bhp

High Static 1017-2490 rpm, 1.07 maximum bhp

50FE-A04 Single Phase — Standard/Medium Static — 3 Ton Horizontal Supply (rpm - vdc)

CFM	AVAILABLE EXTERNAL STATIC PRESSURE (in. wg)									
	0.2		0.4		0.6		0.8		1.0	
	rpm	vdc	rpm	vdc	rpm	vdc	rpm	vdc	rpm	vdc
900	1017	4.6	1284	5.9	1501	6.9	1684	7.7	1843	8.4
975	1055	4.8	1311	6.0	1527	7.0	1711	7.8	1871	8.5
1050	1096	5.0	1340	6.1	1553	7.1	1737	7.9	1899	8.7
1125	1140	5.2	1371	6.3	1580	7.2	1763	8.1	1925	8.8
1200	1186	5.4	1404	6.4	1608	7.3	1789	8.2	1951	8.9
1275	1236	5.6	1440	6.6	1637	7.5	1816	8.3	1977	9.0
1350	1286	5.9	1477	6.7	1666	7.6	1843	8.4	2004	9.2
1425	1338	6.1	1517	6.9	1698	7.8	1871	8.5	2030	9.3
1500	1391	6.4	1559	7.1	1733	7.9	1900	8.7	2057	9.4

CFM	AVAILABLE EXTERNAL STATIC PRESSURE (in. wg)									
	1.2		1.4		1.6		1.8		2.0	
	rpm	vdc	rpm	vdc	rpm	vdc	rpm	vdc	rpm	vdc
900	1984	9.1	2113	9.6	—	—	—	—	—	—
975	2014	9.2	2144	9.8	—	—	—	—	—	—
1050	2043	9.3	—	—	—	—	—	—	—	—
1125	2071	9.5	—	—	—	—	—	—	—	—
1200	2098	9.6	—	—	—	—	—	—	—	—
1275	2124	9.7	—	—	—	—	—	—	—	—
1350	2150	9.8	—	—	—	—	—	—	—	—
1425	—	—	—	—	—	—	—	—	—	—
1500	—	—	—	—	—	—	—	—	—	—

Standard/Medium Static 1017-2190 rpm

50FE-A04 Single Phase — High Static — 3 Ton Horizontal Supply (rpm - vdc)

CFM	AVAILABLE EXTERNAL STATIC PRESSURE (in. wg)									
	0.2		0.4		0.6		0.8		1.0	
	rpm	vdc	rpm	vdc	rpm	vdc	rpm	vdc	rpm	vdc
900	1017	4.1	1284	5.2	1501	6.0	1684	6.8	1843	7.4
975	1055	4.2	1311	5.3	1527	6.1	1711	6.9	1871	7.5
1050	1096	4.4	1340	5.4	1553	6.2	1737	7.0	1899	7.6
1125	1140	4.6	1371	5.5	1580	6.3	1763	7.1	1925	7.7
1200	1186	4.8	1404	5.6	1608	6.5	1789	7.2	1951	7.8
1275	1236	5.0	1440	5.8	1637	6.6	1816	7.3	1977	7.9
1350	1286	5.2	1477	5.9	1666	6.7	1843	7.4	2004	8.0
1425	1338	5.4	1517	6.1	1698	6.8	1871	7.5	2030	8.2
1500	1391	5.6	1559	6.3	1733	7.0	1900	7.6	2057	8.3

CFM	AVAILABLE EXTERNAL STATIC PRESSURE (in. wg)									
	1.2		1.4		1.6		1.8		2.0	
	rpm	vdc	rpm	vdc	rpm	vdc	rpm	vdc	rpm	vdc
900	1984	8.0	2113	8.5	2231	9.0	2342	9.4	2446	9.8
975	2014	8.1	2144	8.6	2264	9.1	2376	9.5	2481	10.0
1050	2043	8.2	2174	8.7	2295	9.2	2408	9.7	—	—
1125	2071	8.3	2203	8.8	2325	9.3	2439	9.8	—	—
1200	2098	8.4	2231	9.0	2354	9.5	2469	9.9	—	—
1275	2124	8.5	2258	9.1	2382	9.6	—	—	—	—
1350	2150	8.6	2285	9.2	2410	9.7	—	—	—	—
1425	2176	8.7	2311	9.3	2436	9.8	—	—	—	—
1500	2202	8.8	2337	9.4	2462	9.9	—	—	—	—

High Static 1017-2490 rpm

50FE-A04 Three Phase — 3 Ton Horizontal Supply (rpm - bhp)

CFM	AVAILABLE EXTERNAL STATIC PRESSURE (in. wg)									
	0.2		0.4		0.6		0.8		1.0	
	rpm	bhp	rpm	bhp	rpm	bhp	rpm	bhp	rpm	bhp
900	1017	0.07	1284	0.15	1501	0.24	1684	0.33	1843	0.44
975	1055	0.08	1311	0.16	1527	0.25	1711	0.35	1871	0.46
1050	1096	0.09	1340	0.17	1553	0.26	1737	0.36	1899	0.48
1125	1140	0.10	1371	0.18	1580	0.27	1763	0.38	1925	0.50
1200	1186	0.12	1404	0.19	1608	0.29	1789	0.40	1951	0.52
1275	1236	0.13	1440	0.21	1637	0.31	1816	0.42	1977	0.54
1350	1286	0.15	1477	0.22	1666	0.32	1843	0.44	2004	0.56
1425	1338	0.17	1517	0.24	1698	0.34	1871	0.46	2030	0.58
1500	1391	0.19	1559	0.26	1733	0.36	1900	0.48	2057	0.61

CFM	AVAILABLE EXTERNAL STATIC PRESSURE (in. wg)									
	1.2		1.4		1.6		1.8		2.0	
	rpm	bhp	rpm	bhp	rpm	bhp	rpm	bhp	rpm	bhp
900	1984	0.54	2113	0.66	2231	0.77	2342	0.89	2446	1.02
975	2014	0.57	2144	0.69	2264	0.81	2376	0.93	2481	1.06
1050	2043	0.59	2174	0.72	2295	0.84	2408	0.97	—	—
1125	2071	0.62	2203	0.74	2325	0.88	2439	1.01	—	—
1200	2098	0.64	2231	0.77	2354	0.91	2469	1.05	—	—
1275	2124	0.67	2258	0.80	2382	0.94	—	—	—	—
1350	2150	0.69	2285	0.83	2410	0.97	—	—	—	—
1425	2176	0.72	2311	0.86	2436	1.01	—	—	—	—
1500	2202	0.74	2337	0.89	2462	1.04	—	—	—	—

Standard/Medium Static 1017-2190 rpm, 0.71 maximum bhp

High Static 1017-2490 rpm, 1.07 maximum bhp

50FE-A04 Three Phase — Standard/Medium Static — 3 Ton Horizontal Supply (rpm - vdc)

CFM	AVAILABLE EXTERNAL STATIC PRESSURE (in. wg)									
	0.2		0.4		0.6		0.8		1.0	
	rpm	vdc	rpm	vdc	rpm	vdc	rpm	vdc	rpm	vdc
900	1017	4.6	1284	5.9	1501	6.9	1684	7.7	1843	8.4
975	1055	4.8	1311	6.0	1527	7.0	1711	7.8	1871	8.5
1050	1096	5.0	1340	6.1	1553	7.1	1737	7.9	1899	8.7
1125	1140	5.2	1371	6.3	1580	7.2	1763	8.1	1925	8.8
1200	1186	5.4	1404	6.4	1608	7.3	1789	8.2	1951	8.9
1275	1236	5.6	1440	6.6	1637	7.5	1816	8.3	1977	9.0
1350	1286	5.9	1477	6.7	1666	7.6	1843	8.4	2004	9.2
1425	1338	6.1	1517	6.9	1698	7.8	1871	8.5	2030	9.3
1500	1391	6.4	1559	7.1	1733	7.9	1900	8.7	2057	9.4

CFM	AVAILABLE EXTERNAL STATIC PRESSURE (in. wg)									
	1.2		1.4		1.6		1.8		2.0	
	rpm	vdc	rpm	vdc	rpm	vdc	rpm	vdc	rpm	vdc
900	1984	9.1	2113	9.6	—	—	—	—	—	—
975	2014	9.2	2144	9.8	—	—	—	—	—	—
1050	2043	9.3	—	—	—	—	—	—	—	—
1125	2071	9.5	—	—	—	—	—	—	—	—
1200	2098	9.6	—	—	—	—	—	—	—	—
1275	2124	9.7	—	—	—	—	—	—	—	—
1350	2150	9.8	—	—	—	—	—	—	—	—
1425	—	—	—	—	—	—	—	—	—	—
1500	—	—	—	—	—	—	—	—	—	—

Standard/Medium Static 1017-2190 rpm

Fan data (cont)

50FE-A04 Three Phase — High Static — 3 Ton Horizontal Supply (rpm - vdc)

CFM	AVAILABLE EXTERNAL STATIC PRESSURE (in. wg)									
	0.2		0.4		0.6		0.8		1.0	
	rpm	vdc	rpm	vdc	rpm	vdc	rpm	vdc	rpm	vdc
900	1017	4.1	1284	5.2	1501	6.0	1684	6.8	1843	7.4
975	1055	4.2	1311	5.3	1527	6.1	1711	6.9	1871	7.5
1050	1096	4.4	1340	5.4	1553	6.2	1737	7.0	1899	7.6
1125	1140	4.6	1371	5.5	1580	6.3	1763	7.1	1925	7.7
1200	1186	4.8	1404	5.6	1608	6.5	1789	7.2	1951	7.8
1275	1236	5.0	1440	5.8	1637	6.6	1816	7.3	1977	7.9
1350	1286	5.2	1477	5.9	1666	6.7	1843	7.4	2004	8.0
1425	1338	5.4	1517	6.1	1698	6.8	1871	7.5	2030	8.2
1500	1391	5.6	1559	6.3	1733	7.0	1900	7.6	2057	8.3

CFM	AVAILABLE EXTERNAL STATIC PRESSURE (in. wg)									
	1.2		1.4		1.6		1.8		2.0	
	rpm	vdc	rpm	vdc	rpm	vdc	rpm	vdc	rpm	vdc
900	1984	8.0	2113	8.5	2231	9.0	2342	9.4	2446	9.8
975	2014	8.1	2144	8.6	2264	9.1	2376	9.5	2481	10.0
1050	2043	8.2	2174	8.7	2295	9.2	2408	9.7	—	—
1125	2071	8.3	2203	8.8	2325	9.3	2439	9.8	—	—
1200	2098	8.4	2231	9.0	2354	9.5	2469	9.9	—	—
1275	2124	8.5	2258	9.1	2382	9.6	—	—	—	—
1350	2150	8.6	2285	9.2	2410	9.7	—	—	—	—
1425	2176	8.7	2311	9.3	2436	9.8	—	—	—	—
1500	2202	8.8	2337	9.4	2462	9.9	—	—	—	—

High Static 1017-2490 rpm

50FE-A05 Single Phase — 4 Ton Horizontal Supply (rpm - bhp)

CFM	AVAILABLE EXTERNAL STATIC PRESSURE (in. wg)									
	0.2		0.4		0.6		0.8		1.0	
	rpm	bhp	rpm	bhp	rpm	bhp	rpm	bhp	rpm	bhp
1200	1092	0.14	1306	0.24	1497	0.35	1667	0.49	1819	0.64
1300	1148	0.16	1348	0.26	1533	0.38	1700	0.52	1851	0.67
1400	1207	0.18	1394	0.28	1571	0.41	1734	0.55	1882	0.70
1500	1267	0.21	1442	0.31	1612	0.44	1770	0.58	1916	0.73
1600	1329	0.24	1493	0.35	1655	0.47	1808	0.61	1951	0.77
1700	1393	0.28	1546	0.38	1700	0.51	1848	0.65	1988	0.81
1800	1458	0.32	1602	0.42	1748	0.55	1890	0.70	2026	0.86
1900	1523	0.36	1659	0.47	1797	0.60	1934	0.75	2066	0.91
2000	1590	0.41	1719	0.52	1849	0.65	1980	0.80	2108	0.96

CFM	AVAILABLE EXTERNAL STATIC PRESSURE (in. wg)									
	1.2		1.4		1.6		1.8		2.0	
	rpm	bhp	rpm	bhp	rpm	bhp	rpm	bhp	rpm	bhp
1200	1959	0.79	2089	0.96	2211	1.14	2327	1.33	2438	1.53
1300	1988	0.83	2117	1.00	2238	1.18	2352	1.37	—	—
1400	2020	0.86	2146	1.03	2266	1.22	2379	1.41	—	—
1500	2051	0.90	2177	1.08	2296	1.26	2408	1.46	—	—
1600	2084	0.94	2209	1.12	2327	1.31	2438	1.51	—	—
1700	2119	0.99	2242	1.17	2358	1.36	—	—	—	—
1800	2154	1.03	2276	1.22	2391	1.41	—	—	—	—
1900	2191	1.08	2311	1.27	2424	1.47	—	—	—	—
2000	2230	1.14	2347	1.33	2459	1.53	—	—	—	—

Standard/Medium Static 1092-2170 rpm, 1.06 maximum bhp

High Static 1092-2460 rpm, 1.53 maximum bhp

50FE-A05 Single Phase — Standard/Medium Static — 4 Ton Horizontal Supply (rpm - vdc)

CFM	AVAILABLE EXTERNAL STATIC PRESSURE (in. wg)									
	0.2		0.4		0.6		0.8		1.0	
	rpm	vdc	rpm	vdc	rpm	vdc	rpm	vdc	rpm	vdc
1200	1092	5.0	1306	6.0	1497	6.9	1667	7.7	1819	8.4
1300	1148	5.3	1348	6.2	1533	7.1	1700	7.8	1851	8.5
1400	1207	5.6	1394	6.4	1571	7.2	1734	8.0	1882	8.7
1500	1267	5.8	1442	6.6	1612	7.4	1770	8.2	1916	8.8
1600	1329	6.1	1493	6.9	1655	7.6	1808	8.3	1951	9.0
1700	1393	6.4	1546	7.1	1700	7.8	1848	8.5	1988	9.2
1800	1458	6.7	1602	7.4	1748	8.1	1890	8.7	2026	9.3
1900	1523	7.0	1659	7.6	1797	8.3	1934	8.9	2066	9.5
2000	1590	7.3	1719	7.9	1849	8.5	1980	9.1	2108	9.7

CFM	AVAILABLE EXTERNAL STATIC PRESSURE (in. wg)									
	1.2		1.4		1.6		1.8		2.0	
	rpm	vdc	rpm	vdc	rpm	vdc	rpm	vdc	rpm	vdc
1200	1959	9.0	2089	9.6	—	—	—	—	—	—
1300	1988	9.2	2117	9.8	—	—	—	—	—	—
1400	2020	9.3	2146	9.9	—	—	—	—	—	—
1500	2051	9.5	—	—	—	—	—	—	—	—
1600	2084	9.6	—	—	—	—	—	—	—	—
1700	2119	9.8	—	—	—	—	—	—	—	—
1800	2154	9.9	—	—	—	—	—	—	—	—
1900	—	—	—	—	—	—	—	—	—	—
2000	—	—	—	—	—	—	—	—	—	—

Standard/Medium Static 1092-2170 rpm

Fan data (cont)

50FE-A05 Single Phase — High Static — 4 Ton Horizontal Supply (rpm - vdc)

CFM	AVAILABLE EXTERNAL STATIC PRESSURE (in. wg)									
	0.2		0.4		0.6		0.8		1.0	
	rpm	vdc	rpm	vdc	rpm	vdc	rpm	vdc	rpm	vdc
1200	1092	4.4	1306	5.3	1497	6.1	1667	6.8	1819	7.4
1300	1148	4.7	1348	5.5	1533	6.2	1700	6.9	1851	7.5
1400	1207	4.9	1394	5.7	1571	6.4	1734	7.0	1882	7.7
1500	1267	5.2	1442	5.9	1612	6.6	1770	7.2	1916	7.8
1600	1329	5.4	1493	6.1	1655	6.7	1808	7.3	1951	7.9
1700	1393	5.7	1546	6.3	1700	6.9	1848	7.5	1988	8.1
1800	1458	5.9	1602	6.5	1748	7.1	1890	7.7	2026	8.2
1900	1523	6.2	1659	6.7	1797	7.3	1934	7.9	2066	8.4
2000	1590	6.5	1719	7.0	1849	7.5	1980	8.0	2108	8.6

CFM	AVAILABLE EXTERNAL STATIC PRESSURE (in. wg)									
	1.2		1.4		1.6		1.8		2.0	
	rpm	vdc	rpm	vdc	rpm	vdc	rpm	vdc	rpm	vdc
1200	1959	8.0	2089	8.5	2211	9.0	2327	9.5	2438	9.9
1300	1988	8.1	2117	8.6	2238	9.1	2352	9.6	—	—
1400	2020	8.2	2146	8.7	2266	9.2	2379	9.7	—	—
1500	2051	8.3	2177	8.8	2296	9.3	2408	9.8	—	—
1600	2084	8.5	2209	9.0	2327	9.5	2438	9.9	—	—
1700	2119	8.6	2242	9.1	2358	9.6	—	—	—	—
1800	2154	8.8	2276	9.3	2391	9.7	—	—	—	—
1900	2191	8.9	2311	9.4	2424	9.9	—	—	—	—
2000	2230	9.1	2347	9.5	2459	10.0	—	—	—	—

High Static 1092-2460 rpm

50FE-A05 Three Phase — 4 Ton Horizontal Supply (rpm - bhp)

CFM	AVAILABLE EXTERNAL STATIC PRESSURE (in. wg)									
	0.2		0.4		0.6		0.8		1.0	
	rpm	bhp	rpm	bhp	rpm	bhp	rpm	bhp	rpm	bhp
1200	1093	0.14	1306	0.24	1497	0.35	1667	0.49	1819	0.64
1300	1148	0.16	1348	0.26	1533	0.38	1700	0.52	1850	0.67
1400	1206	0.18	1393	0.28	1571	0.41	1734	0.55	1883	0.70
1500	1266	0.21	1442	0.31	1612	0.44	1770	0.58	1916	0.73
1600	1329	0.24	1493	0.35	1655	0.47	1808	0.61	1951	0.77
1700	1393	0.28	1546	0.38	1700	0.51	1848	0.65	1988	0.81
1800	1458	0.32	1602	0.42	1747	0.55	1890	0.70	2026	0.86
1900	1523	0.36	1659	0.47	1797	0.60	1934	0.75	2066	0.91
2000	1590	0.41	1718	0.52	1849	0.65	1980	0.80	2108	0.96

CFM	AVAILABLE EXTERNAL STATIC PRESSURE (in. wg)									
	1.2		1.4		1.6		1.8		2.0	
	rpm	bhp	rpm	bhp	rpm	bhp	rpm	bhp	rpm	bhp
1200	1959	0.79	2089	0.96	2211	1.14	2327	1.33	2438	1.53
1300	1988	0.83	2117	1.00	2238	1.18	2352	1.37	2462	1.57
1400	2019	0.86	2146	1.03	2266	1.22	2379	1.41	2487	1.61
1500	2052	0.90	2177	1.08	2296	1.26	2408	1.46	2515	1.66
1600	2084	0.94	2209	1.12	2327	1.31	2438	1.51	2544	1.71
1700	2119	0.99	2242	1.17	2358	1.36	2469	1.56	2574	1.77
1800	2154	1.03	2276	1.22	2391	1.41	2500	1.61	2605	1.83
1900	2191	1.08	2311	1.27	2424	1.47	2533	1.68	2636	1.89
2000	2230	1.14	2347	1.33	2459	1.53	2566	1.74	—	—

Standard/Medium Static 1093-2170 rpm, 1.06 maximum bhp

High Static 1093-2660 rpm, 1.96 maximum bhp

50FE-A05 Three Phase — Standard/Medium Static — 4 Ton Horizontal Supply (rpm - vdc)

CFM	AVAILABLE EXTERNAL STATIC PRESSURE (in. wg)									
	0.2		0.4		0.6		0.8		1.0	
	rpm	vdc	rpm	vdc	rpm	vdc	rpm	vdc	rpm	vdc
1200	1093	5.0	1306	6.0	1497	6.9	1667	7.7	1819	8.4
1300	1148	5.3	1348	6.2	1533	7.1	1700	7.8	1850	8.5
1400	1206	5.6	1393	6.4	1571	7.2	1734	8.0	1883	8.7
1500	1266	5.8	1442	6.6	1612	7.4	1770	8.2	1916	8.8
1600	1329	6.1	1493	6.9	1655	7.6	1808	8.3	1951	9.0
1700	1393	6.4	1546	7.1	1700	7.8	1848	8.5	1988	9.2
1800	1458	6.7	1602	7.4	1747	8.1	1890	8.7	2026	9.3
1900	1523	7.0	1659	7.6	1797	8.3	1934	8.9	2066	9.5
2000	1590	7.3	1718	7.9	1849	8.5	1980	9.1	2108	9.7

CFM	AVAILABLE EXTERNAL STATIC PRESSURE (in. wg)									
	1.2		1.4		1.6		1.8		2.0	
	rpm	vdc	rpm	vdc	rpm	vdc	rpm	vdc	rpm	vdc
1200	1959	9.0	2089	9.6	—	—	—	—	—	—
1300	1988	9.2	2117	9.8	—	—	—	—	—	—
1400	2019	9.3	2146	9.9	—	—	—	—	—	—
1500	2052	9.5	—	—	—	—	—	—	—	—
1600	2084	9.6	—	—	—	—	—	—	—	—
1700	2119	9.8	—	—	—	—	—	—	—	—
1800	2154	9.9	—	—	—	—	—	—	—	—
1900	—	—	—	—	—	—	—	—	—	—
2000	—	—	—	—	—	—	—	—	—	—

Standard/Medium Static 1093-2170 rpm

50FE-A05 Three Phase — High Static — 4 Ton Horizontal Supply (rpm - vdc)

CFM	AVAILABLE EXTERNAL STATIC PRESSURE (in. wg)									
	0.2		0.4		0.6		0.8		1.0	
	rpm	vdc	rpm	vdc	rpm	vdc	rpm	vdc	rpm	vdc
1200	1093	4.1	1306	4.9	1497	5.6	1667	6.3	1819	6.8
1300	1148	4.3	1348	5.1	1533	5.8	1700	6.4	1850	7.0
1400	1206	4.5	1393	5.2	1571	5.9	1734	6.5	1883	7.1
1500	1266	4.8	1442	5.4	1612	6.1	1770	6.7	1916	7.2
1600	1329	5.0	1493	5.6	1655	6.2	1808	6.8	1951	7.3
1700	1393	5.2	1546	5.8	1700	6.4	1848	6.9	1988	7.5
1800	1458	5.5	1602	6.0	1747	6.6	1890	7.1	2026	7.6
1900	1523	5.7	1659	6.2	1797	6.8	1934	7.3	2066	7.8
2000	1590	6.0	1718	6.5	1849	7.0	1980	7.4	2108	7.9

CFM	AVAILABLE EXTERNAL STATIC PRESSURE (in. wg)									
	1.2		1.4		1.6		1.8		2.0	
	rpm	vdc	rpm	vdc	rpm	vdc	rpm	vdc	rpm	vdc
1200	1959	7.4	2089	7.9	2211	8.3	2327	8.7	2438	9.2
1300	1988	7.5	2117	8.0	2238	8.4	2352	8.8	2462	9.3
1400	2019	7.6	2146	8.1	2266	8.5	2379	8.9	2487	9.3
1500	2052	7.7	2177	8.2	2296	8.6	2408	9.1	2515	9.5
1600	2084	7.8	2209	8.3	2327	8.7	2438	9.2	2544	9.6
1700	2119	8.0	2242	8.4	2358	8.9	2469	9.3	2574	9.7
1800	2154	8.1	2276	8.6	2391	9.0	2500	9.4	2605	9.8
1900	2191	8.2	2311	8.7	2424	9.1	2533	9.5	2636	9.9
2000	2230	8.4	2347	8.8	2459	9.2	2566	9.6	—	—

High Static 1093-2660 rpm

50FE-A06 Single Phase — 5 Ton Horizontal Supply (rpm - bhp)

CFM	AVAILABLE EXTERNAL STATIC PRESSURE (in. wg)									
	0.2		0.4		0.6		0.8		1.0	
	rpm	bhp	rpm	bhp	rpm	bhp	rpm	bhp	rpm	bhp
1500	1267	0.21	1442	0.31	1612	0.44	1770	0.58	1916	0.73
1625	1345	0.25	1506	0.35	1666	0.48	1818	0.62	1960	0.78
1750	1425	0.30	1573	0.40	1723	0.53	1868	0.67	2006	0.84
1875	1507	0.35	1644	0.46	1785	0.59	1923	0.73	2055	0.90
2000	1590	0.41	1718	0.52	1849	0.65	1980	0.80	2107	0.96
2125	1674	0.48	1794	0.59	1917	0.72	2041	0.87	2162	1.04
2250	1759	0.56	1871	0.67	1987	0.80	2104	0.95	2220	1.12
2375	1845	0.64	1951	0.76	2060	0.89	2170	1.05	2281	1.21
2500	1931	0.74	2031	0.86	2134	0.99	2239	1.15	2344	1.32

CFM	AVAILABLE EXTERNAL STATIC PRESSURE (in. wg)									
	1.2		1.4		1.6		1.8		2.0	
	rpm	bhp	rpm	bhp	rpm	bhp	rpm	bhp	rpm	bhp
1500	2051	0.90	2177	1.08	2295	1.26	2407	1.45	2514	1.66
1625	2092	0.95	2217	1.13	2334	1.32	2445	1.52	2551	1.72
1750	2136	1.01	2258	1.19	2374	1.38	2484	1.59	2588	1.79
1875	2182	1.07	2302	1.26	2415	1.45	2524	1.66	2628	1.87
2000	2230	1.14	2347	1.33	2459	1.53	2566	1.74	—	—
2125	2281	1.22	2395	1.41	2505	1.61	2609	1.82	—	—
2250	2334	1.30	2445	1.50	2552	1.70	2655	1.92	—	—
2375	2390	1.40	2497	1.59	2601	1.80	—	—	—	—
2500	2449	1.50	2552	1.70	2653	1.91	—	—	—	—

Standard/Medium Static 1267-2390 rpm, 1.44 maximum bhp

High Static 1267-2660 rpm, 1.96 maximum bhp

50FE-A06 Single Phase — Standard/Medium Static — 5 Ton Horizontal Supply (rpm - vdc)

CFM	AVAILABLE EXTERNAL STATIC PRESSURE (in. wg)									
	0.2		0.4		0.6		0.8		1.0	
	rpm	vdc	rpm	vdc	rpm	vdc	rpm	vdc	rpm	vdc
1500	1267	5.3	1442	6.0	1612	6.7	1770	7.4	1916	8.0
1625	1345	5.6	1506	6.3	1666	7.0	1818	7.6	1960	8.2
1750	1425	6.0	1574	6.6	1723	7.2	1869	7.8	2006	8.4
1875	1507	6.3	1644	6.9	1785	7.5	1923	8.0	2056	8.6
2000	1590	6.7	1719	7.2	1849	7.7	1980	8.3	2108	8.8
2125	1674	7.0	1794	7.5	1917	8.0	2041	8.5	2163	9.1
2250	1760	7.4	1872	7.8	1987	8.3	2104	8.8	2221	9.3
2375	1845	7.7	1951	8.2	2060	8.6	2171	9.1	2281	9.5
2500	1932	8.1	2032	8.5	2135	8.9	2239	9.4	2345	9.8

CFM	AVAILABLE EXTERNAL STATIC PRESSURE (in. wg)									
	1.2		1.4		1.6		1.8		2.0	
	rpm	vdc	rpm	vdc	rpm	vdc	rpm	vdc	rpm	vdc
1500	2051	8.6	2177	9.1	2296	9.6	—	—	—	—
1625	2093	8.8	2217	9.3	2334	9.8	—	—	—	—
1750	2136	8.9	2259	9.5	2374	9.9	—	—	—	—
1875	2182	9.1	2302	9.6	—	—	—	—	—	—
2000	2230	9.3	2347	9.8	—	—	—	—	—	—
2125	2281	9.5	—	—	—	—	—	—	—	—
2250	2334	9.8	—	—	—	—	—	—	—	—
2375	—	—	—	—	—	—	—	—	—	—
2500	—	—	—	—	—	—	—	—	—	—

Standard/Medium Static 1267-2390 rpm

Fan data (cont)

50FE-A06 Single Phase — High Static — 5 Ton Horizontal Supply (rpm - vdc)

CFM	AVAILABLE EXTERNAL STATIC PRESSURE (in. wg)									
	0.2		0.4		0.6		0.8		1.0	
	rpm	vdc	rpm	vdc	rpm	vdc	rpm	vdc	rpm	vdc
1500	1267	4.8	1442	5.4	1612	6.1	1770	6.7	1916	7.2
1625	1345	5.1	1506	5.7	1666	6.3	1818	6.8	1960	7.4
1750	1425	5.4	1573	5.9	1723	6.5	1868	7.0	2006	7.5
1875	1507	5.7	1644	6.2	1785	6.7	1923	7.2	2055	7.7
2000	1590	6.0	1718	6.5	1849	7.0	1980	7.4	2107	7.9
2125	1674	6.3	1794	6.7	1917	7.2	2041	7.7	2162	8.1
2250	1759	6.6	1871	7.0	1987	7.5	2104	7.9	2220	8.3
2375	1845	6.9	1951	7.3	2060	7.7	2170	8.2	2281	8.6
2500	1931	7.3	2031	7.6	2134	8.0	2239	8.4	2344	8.8

CFM	AVAILABLE EXTERNAL STATIC PRESSURE (in. wg)									
	1.2		1.4		1.6		1.8		2.0	
	rpm	vdc	rpm	vdc	rpm	vdc	rpm	vdc	rpm	vdc
1500	2051	7.7	2177	8.2	2295	8.6	2407	9.0	2514	9.5
1625	2092	7.9	2217	8.3	2334	8.8	2445	9.2	2551	9.6
1750	2136	8.0	2258	8.5	2374	8.9	2484	9.3	2588	9.7
1875	2182	8.2	2302	8.7	2415	9.1	2524	9.5	2628	9.9
2000	2230	8.4	2347	8.8	2459	9.2	2566	9.6	—	—
2125	2281	8.6	2395	9.0	2505	9.4	2609	9.8	—	—
2250	2334	8.8	2445	9.2	2552	9.6	2655	10.0	—	—
2375	2390	9.0	2497	9.4	2601	9.8	—	—	—	—
2500	2449	9.2	2552	9.6	2653	10.0	—	—	—	—

High Static 1267-2660 rpm

Fan data (cont)

50FE-A06 Three Phase — 5 Ton Horizontal Supply (rpm - bhp)

CFM	AVAILABLE EXTERNAL STATIC PRESSURE (in. wg)									
	0.2		0.4		0.6		0.8		1.0	
	rpm	bhp	rpm	bhp	rpm	bhp	rpm	bhp	rpm	bhp
1500	1267	0.21	1442	0.31	1612	0.44	1770	0.58	1916	0.73
1625	1345	0.25	1506	0.35	1666	0.48	1818	0.62	1960	0.78
1750	1425	0.30	1574	0.40	1723	0.53	1869	0.68	2006	0.84
1875	1507	0.35	1644	0.46	1785	0.59	1923	0.73	2056	0.90
2000	1590	0.41	1719	0.52	1849	0.65	1980	0.80	2108	0.96
2125	1674	0.48	1794	0.59	1917	0.72	2041	0.87	2163	1.04
2250	1760	0.56	1872	0.67	1987	0.80	2104	0.95	2221	1.12
2375	1845	0.64	1951	0.76	2060	0.89	2171	1.05	2281	1.21
2500	1932	0.74	2032	0.86	2135	0.99	2239	1.15	2345	1.32

CFM	AVAILABLE EXTERNAL STATIC PRESSURE (in. wg)									
	1.2		1.4		1.6		1.8		2.0	
	rpm	bhp	rpm	bhp	rpm	bhp	rpm	bhp	rpm	bhp
1500	2051	0.90	2177	1.08	2296	1.26	2408	1.46	2515	1.66
1625	2093	0.95	2217	1.13	2334	1.32	2445	1.52	2551	1.72
1750	2136	1.01	2259	1.19	2374	1.38	2484	1.59	2589	1.80
1875	2182	1.07	2302	1.26	2416	1.45	2524	1.66	2628	1.87
2000	2230	1.14	2347	1.33	2459	1.53	2566	1.74	2669	1.96
2125	2281	1.22	2395	1.41	2505	1.61	2610	1.83	2711	2.05
2250	2334	1.30	2445	1.50	2552	1.70	2655	1.92	2755	2.14
2375	2391	1.40	2498	1.59	2602	1.80	2702	2.02	2800	2.25
2500	2449	1.50	2552	1.70	2653	1.91	2752	2.13	—	—

Standard/Medium Static 1267-2390 rpm, 1.44 maximum bhp

High Static 1267-2836 rpm, 2.43 maximum bhp

50FE-A06 Three Phase — Standard/Medium Static — 5 Ton Horizontal Supply (rpm - vdc)

CFM	AVAILABLE EXTERNAL STATIC PRESSURE (in. wg)									
	0.2		0.4		0.6		0.8		1.0	
	rpm	vdc	rpm	vdc	rpm	vdc	rpm	vdc	rpm	vdc
1500	1267	5.3	1442	6.0	1612	6.7	1770	7.4	1916	8.0
1625	1345	5.6	1506	6.3	1666	7.0	1818	7.6	1960	8.2
1750	1425	6.0	1574	6.6	1723	7.2	1869	7.8	2006	8.4
1875	1507	6.3	1644	6.9	1785	7.5	1923	8.0	2056	8.6
2000	1590	6.7	1719	7.2	1849	7.7	1980	8.3	2108	8.8
2125	1674	7.0	1794	7.5	1917	8.0	2041	8.5	2163	9.1
2250	1760	7.4	1872	7.8	1987	8.3	2104	8.8	2221	9.3
2375	1845	7.7	1951	8.2	2060	8.6	2171	9.1	2281	9.5
2500	1932	8.1	2032	8.5	2135	8.9	2239	9.4	2345	9.8

CFM	AVAILABLE EXTERNAL STATIC PRESSURE (in. wg)									
	1.2		1.4		1.6		1.8		2.0	
	rpm	vdc	rpm	vdc	rpm	vdc	rpm	vdc	rpm	vdc
1500	2051	8.6	2177	9.1	2296	9.6	—	—	—	—
1625	2093	8.8	2217	9.3	2334	9.8	—	—	—	—
1750	2136	8.9	2259	9.5	2374	9.9	—	—	—	—
1875	2182	9.1	2302	9.6	—	—	—	—	—	—
2000	2230	9.3	2347	9.8	—	—	—	—	—	—
2125	2281	9.5	—	—	—	—	—	—	—	—
2250	2334	9.8	—	—	—	—	—	—	—	—
2375	—	—	—	—	—	—	—	—	—	—
2500	—	—	—	—	—	—	—	—	—	—

Standard/Medium Static 1267-2390 rpm

50FE-A06 Three Phase — High Static — 5 Ton Horizontal Supply (rpm - vdc)

CFM	AVAILABLE EXTERNAL STATIC PRESSURE (in. wg)									
	0.2		0.4		0.6		0.8		1.0	
	rpm	vdc	rpm	vdc	rpm	vdc	rpm	vdc	rpm	vdc
1500	1267	4.5	1442	5.1	1612	5.7	1770	6.2	1916	6.8
1625	1345	4.7	1506	5.3	1666	5.9	1818	6.4	1960	6.9
1750	1425	5.0	1574	5.6	1723	6.1	1869	6.6	2006	7.1
1875	1507	5.3	1644	5.8	1785	6.3	1923	6.8	2056	7.2
2000	1590	5.6	1719	6.1	1849	6.5	1980	7.0	2108	7.4
2125	1674	5.9	1794	6.3	1917	6.8	2041	7.2	2163	7.6
2250	1760	6.2	1872	6.6	1987	7.0	2104	7.4	2221	7.8
2375	1845	6.5	1951	6.9	2060	7.3	2171	7.7	2281	8.0
2500	1932	6.8	2032	7.2	2135	7.5	2239	7.9	2345	8.3

CFM	AVAILABLE EXTERNAL STATIC PRESSURE (in. wg)									
	1.2		1.4		1.6		1.8		2.0	
	rpm	vdc	rpm	vdc	rpm	vdc	rpm	vdc	rpm	vdc
1500	2051	7.2	2177	7.7	2296	8.1	2408	8.5	2515	8.9
1625	2093	7.4	2217	7.8	2334	8.2	2445	8.6	2551	9.0
1750	2136	7.5	2259	8.0	2374	8.4	2484	8.8	2589	9.1
1875	2182	7.7	2302	8.1	2416	8.5	2524	8.9	2628	9.3
2000	2230	7.9	2347	8.3	2459	8.7	2566	9.0	2669	9.4
2125	2281	8.0	2395	8.4	2505	8.8	2610	9.2	2711	9.6
2250	2334	8.2	2445	8.6	2552	9.0	2655	9.4	2755	9.7
2375	2391	8.4	2498	8.8	2602	9.2	2702	9.5	2800	9.9
2500	2449	8.6	2552	9.0	2653	9.4	2752	9.7	—	—

High Static 1267-2836 rpm

Fan data (cont)

50FE-M07 Three Phase — 6 Ton Horizontal Supply (rpm - bhp)

CFM	AVAILABLE EXTERNAL STATIC PRESSURE (in. wg)									
	0.2		0.4		0.6		0.8		1.0	
	rpm	bhp	rpm	bhp	rpm	bhp	rpm	bhp	rpm	bhp
1800	1379	0.27	1512	0.35	1650	0.46	1786	0.58	1918	0.72
1950	1473	0.32	1594	0.41	1721	0.52	1848	0.64	1973	0.78
2100	1569	0.39	1680	0.48	1796	0.59	1915	0.71	2032	0.85
2250	1666	0.47	1769	0.56	1876	0.67	1986	0.79	2096	0.93
2400	1764	0.55	1860	0.65	1959	0.76	2061	0.88	2165	1.02
2550	1863	0.65	1952	0.75	2045	0.86	2140	0.99	2237	1.13
2700	1963	0.76	2047	0.86	2133	0.97	2222	1.10	2313	1.24
2850	2063	0.88	2142	0.99	2223	1.10	2307	1.23	2393	1.37
3000	2163	1.01	2238	1.12	2315	1.24	2394	1.37	2474	1.52

CFM	AVAILABLE EXTERNAL STATIC PRESSURE (in. wg)									
	1.2		1.4		1.6		1.8		2.0	
	rpm	bhp	rpm	bhp	rpm	bhp	rpm	bhp	rpm	bhp
1800	2044	0.87	2163	1.03	2276	1.20	2383	1.38	2486	1.57
1950	2094	0.93	2210	1.10	2320	1.27	2426	1.45	2527	1.64
2100	2148	1.00	2260	1.17	2367	1.34	2471	1.53	2570	1.72
2250	2206	1.08	2313	1.25	2417	1.43	2518	1.61	2616	1.81
2400	2268	1.18	2371	1.34	2471	1.52	2569	1.71	2664	1.90
2550	2335	1.28	2432	1.45	2528	1.62	2622	1.81	2715	2.01
2700	2405	1.40	2497	1.56	2589	1.74	2680	1.93	2769	2.13
2850	2479	1.53	2566	1.69	2654	1.87	2740	2.06	2826	2.26
3000	2556	1.67	2639	1.84	2722	2.02	2804	2.21	—	—

Standard/Medium Static 1379-2530 rpm, 1.76 maximum bhp

High Static 1379-2836 rpm, 2.43 maximum bhp

50FE-M07 Three Phase — Standard/Medium Static — 6 Ton Horizontal Supply (rpm - vdc)

CFM	AVAILABLE EXTERNAL STATIC PRESSURE (in. wg)									
	0.2		0.4		0.6		0.8		1.0	
	rpm	vdc	rpm	vdc	rpm	vdc	rpm	vdc	rpm	vdc
1800	1379	5.5	1512	6.0	1650	6.5	1786	7.1	1918	7.6
1950	1473	5.8	1594	6.3	1721	6.8	1848	7.3	1973	7.8
2100	1569	6.2	1680	6.6	1796	7.1	1915	7.6	2032	8.0
2250	1666	6.6	1769	7.0	1876	7.4	1986	7.8	2096	8.3
2400	1764	7.0	1860	7.4	1959	7.7	2061	8.1	2165	8.6
2550	1863	7.4	1952	7.7	2045	8.1	2140	8.5	2237	8.8
2700	1963	7.8	2047	8.1	2133	8.4	2222	8.8	2313	9.1
2850	2063	8.2	2142	8.5	2223	8.8	2307	9.1	2393	9.5
3000	2163	8.5	2238	8.8	2315	9.2	2394	9.5	2474	9.8

CFM	AVAILABLE EXTERNAL STATIC PRESSURE (in. wg)									
	1.2		1.4		1.6		1.8		2.0	
	rpm	vdc	rpm	vdc	rpm	vdc	rpm	vdc	rpm	vdc
1800	2044	8.1	2163	8.5	2276	9.0	2383	9.4	2486	9.8
1950	2094	8.3	2210	8.7	2320	9.2	2426	9.6	2527	10.0
2100	2148	8.5	2260	8.9	2367	9.4	2471	9.8	—	—
2250	2206	8.7	2313	9.1	2417	9.6	2518	10.0	—	—
2400	2268	9.0	2371	9.4	2471	9.8	—	—	—	—
2550	2335	9.2	2432	9.6	2528	10.0	—	—	—	—
2700	2405	9.5	2497	9.9	—	—	—	—	—	—
2850	2479	9.8	—	—	—	—	—	—	—	—
3000	—	—	—	—	—	—	—	—	—	—

Standard/Medium Static 1379-2530 rpm

50FE-M07 Three Phase — High Static — 6 Ton Horizontal Supply (rpm - vdc)

CFM	AVAILABLE EXTERNAL STATIC PRESSURE (in. wg)									
	0.2		0.4		0.6		0.8		1.0	
	rpm	vdc	rpm	vdc	rpm	vdc	rpm	vdc	rpm	vdc
1800	1379	4.9	1512	5.3	1650	5.8	1786	6.3	1918	6.8
1950	1473	5.2	1594	5.6	1721	6.1	1848	6.5	1973	7.0
2100	1569	5.5	1680	5.9	1796	6.3	1915	6.8	2032	7.2
2250	1666	5.9	1769	6.2	1876	6.6	1986	7.0	2096	7.4
2400	1764	6.2	1860	6.6	1959	6.9	2061	7.3	2165	7.6
2550	1863	6.6	1952	6.9	2045	7.2	2140	7.5	2237	7.9
2700	1963	6.9	2047	7.2	2133	7.5	2222	7.8	2313	8.2
2850	2063	7.3	2142	7.6	2223	7.8	2307	8.1	2393	8.4
3000	2163	7.6	2238	7.9	2315	8.2	2394	8.4	2474	8.7

CFM	AVAILABLE EXTERNAL STATIC PRESSURE (in. wg)									
	1.2		1.4		1.6		1.8		2.0	
	rpm	vdc	rpm	vdc	rpm	vdc	rpm	vdc	rpm	vdc
1800	2044	7.2	2163	7.6	2276	8.0	2383	8.4	2486	8.8
1950	2094	7.4	2210	7.8	2320	8.2	2426	8.6	2527	8.9
2100	2148	7.6	2260	8.0	2367	8.3	2471	8.7	2570	9.1
2250	2206	7.8	2313	8.2	2417	8.5	2518	8.9	2616	9.2
2400	2268	8.0	2371	8.4	2471	8.7	2569	9.1	2664	9.4
2550	2335	8.2	2432	8.6	2528	8.9	2622	9.2	2715	9.6
2700	2405	8.5	2497	8.8	2589	9.1	2680	9.4	2769	9.8
2850	2479	8.7	2566	9.0	2654	9.4	2740	9.7	2826	10.0
3000	2556	9.0	2639	9.3	2722	9.6	2804	9.9	—	—

High Static 1379-2836 rpm

Legend and Notes

Applicable for Electrical Data Tables on pages 102-119

LEGEND

BRKR	— Circuit Breaker
CO	— Convenience Outlet
FLA	— Full Load Amps
IFM	— Indoor Fan Motor
LRA	— Locked Rotor Amps
MCA	— Minimum Circuit Amps
PE	— Power Exhaust
PWRD CO	— Powered Convenience Outlet
RLA	— Rated Load Amps
UNPWR CO	— Unpowered Convenience Outlet

NOTES:

1. In compliance with NEC requirements for multi-motor and combination load equipment (refer to NEC Articles 430 and 440), the overcurrent protective device for the unit shall be fuse or HACR breaker. Canadian units may be fuse or circuit breaker.
2. For 208/230 v units, where one value is show it is the same for either 208 or 230 volts.
3. **Unbalanced 3-Phase Supply Voltage**: Never operate a motor where a phase imbalance in supply voltage is greater than 2%. Use the following formula to determine the percentage of voltage imbalance.

$$\text{\% Voltage Imbalance} = 100 \times \frac{\text{max voltage deviation from average voltage}}{\text{average voltage}}$$

Example: Supply voltage is 230-3-60

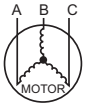

AB = 224-v
BC = 231-v
AC = 226-v

$$\text{Average Voltage} = \frac{(224 + 231 + 226)}{3} = \frac{681}{3} = 227$$

Determine maximum deviation from average voltage.

(AB) 227-224 = 3-v

(BC) 231-227 = 4-v

(AC) 227-226 = 1-v

Maximum deviation is 4-v.

Determine percent of voltage imbalance.

$$\text{\% Voltage Imbalance} = 100x \frac{4}{227} = 1.76\%$$

This amount of phase imbalance is satisfactory as it is below the maximum allowable 2%.

IMPORTANT: If the supply voltage phase imbalance is more than 2%, contact your local electric utility company immediately.

48/50FE**04-07 Cooling Electrical Data[a]

48/50FE UNIT	V-Ph-Hz	UNIT VOLTAGE Range Min	UNIT VOLTAGE Range Max	COMPRESSOR RLA	COMPRESSOR LRA	OFM (ea) Watts	OFM (ea) FLA	STD SCCR kA	HIGH SCCR kA	IFM Type	IFM Effcy at Full Load	IFM FLA	COMBUSTION FAN MOTOR (48FE only) FLA	POWER EXHAUST Kit Qty	POWER EXHAUST FLA (ea kit)
*A04	208-1-60	187	253	16.6	94	275	1.5	5	10	MED	84%	5.1	0.48	1	1.9
										HIGH	85%	7.3	0.48	1	1.9
	230-1-60	187	253	16.6	94	275	1.5	5	10	MED	84%	5.1	0.48	1	1.9
										HIGH	85%	7.3	0.48	1	1.9
	208-3-60	187	253	12.2	98	275	1.5	5	10	MED	84%	5.1	0.48	1	1.9
										HIGH	85%	7.3	0.48	1	1.9
	230-3-60	187	253	12.2	98	275	1.5	5	10	MED	84%	5.1	0.48	1	1.9
										HIGH	85%	7.3	0.48	1	1.9
	460-3-60	414	506	5.8	44	275	0.8	5	10	MED	85%	1.2	0.25	1	1.0
										HIGH	84%	1.7	0.25	1	1.0
	575-3-60	518	633	4.5	27	275	0.6	5	—	MED	84%	1.1	0.24	1	1.9
										HIGH	85%	1.5	0.24	1	1.9
*A05	208-1-60	187	253	22.4	126	275	1.5	5	10	MED	86%	7.1	0.48	1	1.9
										HIGH	84%	9.2	0.48	1	1.9
	230-1-60	187	253	22.4	126	275	1.5	5	10	MED	86%	7.1	0.48	1	1.9
										HIGH	84%	9.2	0.48	1	1.9
	208-3-60	187	253	13.4	120	275	1.5	5	10	MED	86%	7.1	0.48	1	1.9
										HIGH	85%	5.5	0.48	1	1.9
	230-3-60	187	253	13.4	120	275	1.5	5	10	MED	86%	7.1	0.48	1	1.9
										HIGH	85%	5.5	0.48	1	1.9
	460-3-60	414	506	6.0	49	275	0.8	5	10	MED	86%	1.7	0.25	1	1.0
										HIGH	88%	2.6	0.25	1	1.0
	575-3-60	518	633	5.8	41	275	0.6	5	—	MED	85%	1.5	0.24	1	1.9
										HIGH	88%	2.3	0.24	1	1.9
*A06	208-1-60	187	253	23.7	157	275	1.5	5	10	MED	84%	9.2	0.48	1	1.9
										HIGH	87%	11.7	0.48	1	1.9
	230-1-60	187	253	23.7	157	275	1.5	5	10	MED	84%	9.2	0.48	1	1.9
										HIGH	87%	11.7	0.48	1	1.9
	208-3-60	187	253	16.2	156	275	1.5	5	10	MED	84%	9.2	0.48	1	1.9
										HIGH	84%	6.5	0.48	1	1.9
	230-3-60	187	253	16.2	156	275	1.5	5	10	MED	84%	9.2	0.48	1	1.9
										HIGH	84%	6.5	0.48	1	1.9
	460-3-60	414	506	7.8	58	275	0.8	5	10	MED	86%	2.1	0.25	1	1.0
										HIGH	88%	3.1	0.25	1	1.0
	575-3-60	518	633	6.4	48	275	0.6	5	—	MED	85%	2.0	0.24	1	1.9
										HIGH	87%	2.7	0.24	1	1.9
*M07	208-3-60	187	253	18.9	162	275	1.5	5	10	MED	87%	5.5	0.48	1	1.9
										HIGH	84%	6.5	0.48	1	1.9
	230-3-60	187	253	18.9	162	275	1.5	5	10	MED	87%	5.5	0.48	1	1.9
										HIGH	84%	6.5	0.48	1	1.9
	460-3-60	414	506	9.6	71	275	0.8	5	10	MED	88%	2.6	0.25	1	1.0
										HIGH	88%	3.1	0.25	1	1.0
	575-3-60	518	633	6.6	58	275	0.6	5	—	MED	88%	2.3	0.24	1	1.9
										HIGH	87%	2.7	0.24	1	1.9

NOTE(S):

a. 48FE Ultra Low NOx units are not available for size 07 or 575-v.

48FE**04-07 MCA MOCP Electrical Data[a]

48FE UNIT SIZE	NOM. V-Ph-Hz	IFM TYPE	STD SCCR kA	HIGH SCCR kA[b]	NO CONVENIENCE OUTLET OR UNPOWERED CONVENIENCE OUTLET							
					No Power Exhaust				With Power Exhaust (powered from unit)			
					MCA	Fuse or HACR Breaker	Disconnect Size		MCA	Fuse or HACR Breaker	Disconnect Size	
							FLA	LRA			FLA	LRA
*A04	208/230-1-60	MED	5	10	28	40	27	105	30	45	29	107
		HIGH	5	10	30	45	29	108	32	45	31	110
	208/230-3-60	MED	5	10	22	30	22	109	24	30	24	111
		HIGH	5	10	25	30	24	112	26	30	26	114
	460-3-60	MED	5	10	10	15	9	48	11	15	10	49
		HIGH	5	10	10	15	10	48	11	15	11	49
	575-3-60	MED	5	—	8	15	7	31	10	15	9	33
		HIGH	5	—	8	15	8	31	10	15	10	33
*A05	208/230-1-60	MED	5	10	37	50	36	140	39	60	38	142
		HIGH	5	10	39	60	38	143	41	60	40	145
	208/230-3-60	MED	5	10	26	30	25	134	28	40	27	136
		HIGH	5	10	24	30	23	132	26	30	26	134
	460-3-60	MED	5	10	10	15	10	53	11	15	11	54
		HIGH	5	10	11	15	11	55	12	15	12	56
	575-3-60	MED	5	—	10	15	9	45	12	15	11	47
		HIGH	5	—	11	15	10	46	13	15	12	48
*A06	208/230-1-60	MED	5	10	41	60	40	174	43	60	42	176
		HIGH	5	10	43	60	42	177	45	60	45	179
	208/230-3-60	MED	5	10	31	45	31	173	33	45	33	175
		HIGH	5	10	29	40	28	169	31	45	30	171
	460-3-60	MED	5	10	13	20	12	63	14	20	13	64
		HIGH	5	10	14	20	13	64	15	20	15	65
	575-3-60	MED	5	—	11	15	10	53	13	15	13	55
		HIGH	5	—	12	15	11	54	14	15	13	56
*M07	208/230-3-60	MED	5	10	31	45	30	174	33	50	32	176
		HIGH	5	10	32	50	31	175	34	50	33	177
	460-3-60	MED	5	10	16	25	15	77	17	25	16	78
		HIGH	5	10	16	25	16	77	17	25	17	78
	575-3-60	MED	5	—	12	15	11	63	14	15	13	65
		HIGH	5	—	12	15	11	64	14	20	14	66

NOTE(S):

a. 48FE Ultra Low NOx units are not available for size 07 or 575-v.

b. High SCCR (Short Circuit Current Rating) is not available on the following: units with Humidi-MiZer system, Low Ambient controls, Phase loss monitor, Non-fused disconnect, and 575V models.

48FE**04-07 MCA MOCP Electrical Data (cont)[a]

48FE UNIT SIZE	NOM. V-Ph-Hz	IFM TYPE	STD SCCR kA	WITH POWERED CONVENIENCE OUTLET							
				No Power Exhaust				With Power Exhaust (powered from unit)			
				MCA	Fuse or HACR Breaker	Disconnect Size		MCA	Fuse or HACR Breaker	Disconnect Size	
						FLA	LRA			FLA	LRA
*A04	208/230-3-60	MED	5	27	30	27	114	29	40	29	116
		HIGH	5	29	40	30	117	31	40	32	119
	460-3-60	MED	5	12	15	12	50	13	15	13	51
		HIGH	5	12	15	12	50	13	15	13	51
	575-3-60	MED	5	9	15	9	33	11	15	11	35
		HIGH	5	10	15	10	33	12	15	12	35
*A05	208/230-3-60	MED	5	31	40	31	139	33	45	33	141
		HIGH	5	29	40	29	137	31	40	31	139
	460-3-60	MED	5	13	15	12	55	14	15	13	56
		HIGH	5	14	15	13	57	15	20	14	58
	575-3-60	MED	5	12	15	11	47	13	15	13	49
		HIGH	5	12	15	12	48	14	20	14	50
*A06	208/230-3-60	MED	5	36	50	36	178	38	50	39	180
		HIGH	5	34	45	33	174	35	50	36	176
	460-3-60	MED	5	15	20	15	65	16	20	16	66
		HIGH	5	16	20	16	66	17	20	17	67
	575-3-60	MED	5	13	15	12	55	15	20	14	57
		HIGH	5	13	15	13	56	15	20	15	58
*M07	208/230-3-60	MED	5	36	50	35	179	38	50	37	181
		HIGH	5	37	50	36	180	39	50	39	182
	460-3-60	MED	5	18	25	17	79	19	25	19	80
		HIGH	5	19	25	18	79	20	25	19	80
	575-3-60	MED	5	13	15	13	65	15	20	15	67
		HIGH	5	14	15	13	66	16	20	16	68

NOTE(S):

a. 48FE Ultra Low NOx units are not available for size 07 or 575-v.

50FE-A04 MCA MOCP Electrical Data

UNIT SIZE	NOM. V-Ph-Hz	IFM TYPE	STD SCCR kA	HIGH SCCR kA[a]	ELECTRIC HEATER			NO CONVENIENCE OUTLET OR UNPOWERED CONVENIENCE OUTLET							
								No Power Exhaust				With Power Exhaust (powered from unit)			
					CRHEATER ***A00	NOM (kW)	FLA	MCA	Fuse or HACR BRKR	Disconnect Size		MCA	Fuse or HACR BRKR	Disconnect Size	
										FLA	LRA			FLA	LRA
50FE-A04	208/230-1-60	MED	5	10	—	—	—	28	40	27	105	30	45	29	107
			5	10	323A	3.3/4.4	15.9/18.3	28/30	40/40	27/27	105/105	30/32	45/45	29/29	107/107
			5	10	324A	4.9/6.5	23.5/27.1	36/41	40/45	33/37	105/105	39/43	45/45	35/39	107/107
			5	10	325A	6.5/8.7	31.4/36.3	46/52	50/60	42/48	105/105	48/55	50/60	44/50	107/107
			5	10	326A	7.9/10.5	37.9/43.8	54/62	60/70	49/56	105/105	57/64	60/70	52/58	107/107
			5	10	327A	9.8/13.0	46.9/54.2	65/75	70/80	60/68	105/105	68/77	70/80	62/70	107/107
		HIGH	5	10	—	—	—	30	45	29	108	32	45	31	110
			5	10	323A	3.3/4.4	15.9/18.3	30/32	45/45	29/29	108/108	32/35	45/45	31/32	110/110
			5	10	324A	4.9/6.5	23.5/27.1	39/43	45/45	35/40	108/108	41/46	45/50	38/42	110/110
			5	10	325A	6.5/8.7	31.4/36.3	49/55	50/60	45/50	108/108	51/57	60/60	47/52	110/110
			5	10	326A	7.9/10.5	37.9/43.8	57/64	60/70	52/59	108/108	59/67	60/70	54/61	110/110
			5	10	327A	9.8/13.0	46.9/54.2	68/77	70/80	62/71	108/108	71/80	80/80	65/73	110/110
	208/230-3-60	MED	5	10	—	—	—	22	30	22	109	24	30	24	111
			5	10	323A	3.3/4.4	9.2/10.6	22/22	30/30	22/22	109/109	24/24	30/30	24/24	111/111
			5	10	324A	4.9/6.5	13.6/15.6	24/26	30/30	22/24	109/109	26/29	30/30	24/26	111/111
			5	10	325A	6.5/8.7	18.1/20.9	29/33	30/35	27/30	109/109	32/35	35/35	29/32	111/111
			5	10	326A	7.9/10.5	21.9/25.3	34/38	35/40	31/35	109/109	37/41	40/45	33/37	111/111
			5	10	328A	12.0/16.0	33.4/38.5	49/55	50/60	44/50	109/109	51/57	60/60	46/52	111/111
		HIGH	5	10	—	—	—	25	30	24	112	26	30	26	114
			5	10	323A	3.3/4.4	9.2/10.6	25/25	30/30	24/24	112/112	26/26	30/30	26/26	114/114
			5	10	324A	4.9/6.5	13.6/15.6	27/29	30/30	24/26	112/112	29/31	30/35	26/29	114/114
			5	10	325A	6.5/8.7	18.1/20.9	32/36	35/40	29/32	112/112	35/38	35/40	31/35	114/114
			5	10	326A	7.9/10.5	21.9/25.3	37/41	40/45	34/37	112/112	39/44	40/45	36/40	114/114
			5	10	328A	12.0/16.0	33.4/38.5	51/58	60/60	47/53	112/112	54/60	60/60	49/55	114/114
	460-3-60	MED	5	10	—	—	—	10	15	9	48	11	15	10	49
			5	10	333A	6.0	7.2	11	15	10	48	12	15	11	49
			5	10	334A	8.8	10.6	15	15	14	48	16	20	15	49
			5	10	335A	11.5	13.8	19	20	17	48	20	25	18	49
			5	10	336A	14.0	16.8	23	25	21	48	24	25	22	49
		HIGH	5	10	—	—	—	10	15	10	48	11	15	11	49
			5	10	333A	6.0	7.2	12	15	10	48	13	15	11	49
			5	10	334A	8.8	10.6	16	20	14	48	17	20	15	49
			5	10	335A	11.5	13.8	20	20	18	48	21	25	19	49
			5	10	336A	14.0	16.8	24	25	21	48	25	25	22	49
	575-3-60	MED	5	—	—	—	—	8	15	7	31	10	15	9	33
			5	—	339A	10.0	9.6	14	15	12	31	16	20	14	33
			5	—	340A	15.0	14.4	20	20	18	31	22	25	20	33
		HIGH	5	—	—	—	—	8	15	8	31	10	15	10	33
			5	—	339A	10.0	9.6	14	15	13	31	17	20	15	33
			5	—	340A	15.0	14.4	20	20	18	31	23	25	20	33

NOTE(S):

a. High SCCR (Short Circuit Current Rating) is not available on the following: units with Humidi-MiZer system, Low Ambient controls, Phase loss monitor, Non-fused disconnect, and 575V models.

50FE-A04 MCA MOCP Electrical Data (cont)

UNIT SIZE	NOM. V-Ph-Hz	IFM TYPE	STD SCCR kA	ELECTRIC HEATER			WITH POWERED CONVENIENCE OUTLET							
							No Power Exhaust				With Power Exhaust (powered from unit)			
				CRHEATER ***A00	NOM (kW)	FLA	MCA	Fuse or HACR BRKR	Disconnect Size		MCA	Fuse or HACR BRKR	Disconnect Size	
									FLA	LRA			FLA	LRA
50FE-A04	208/230-3-60	MED	5	—	—	—	27	30	27	114	29	40	29	116
			5	323A	3.3/4.4	9.2/10.6	27/27	30/30	27/27	114/114	29/29	40/40	29/29	116/116
			5	324A	4.9/6.5	13.6/15.6	30/32	30/35	27/29	114/114	32/35	40/40	29/32	116/116
			5	325A	6.5/8.7	18.1/20.9	35/39	40/40	32/35	114/114	38/41	40/45	34/38	116/116
			5	326A	7.9/10.5	21.9/25.3	40/44	40/45	37/40	114/114	43/47	45/50	39/43	116/116
			5	328A	12.0/16.0	33.4/38.5	55/61	60/70	50/56	114/114	57/63	60/70	52/58	116/116
		HIGH	5	—	—	—	29	40	30	117	31	40	32	119
			5	323A	3.3/4.4	9.2/10.6	29/29	40/40	30/30	117/117	31/31	40/40	32/32	119/119
			5	324A	4.9/6.5	13.6/15.6	33/35	40/40	30/32	117/117	35/37	40/40	32/34	119/119
			5	325A	6.5/8.7	18.1/20.9	38/42	40/45	35/38	117/117	41/44	45/45	37/40	119/119
			5	326A	7.9/10.5	21.9/25.3	43/47	45/50	39/43	117/117	45/50	45/50	41/45	119/119
			5	328A	12.0/16.0	33.4/38.5	57/64	60/70	52/58	117/117	60/66	60/70	55/60	119/119
	460-3-60	MED	5	—	—	—	12	15	12	50	13	15	13	51
			5	333A	6.0	7.2	14	15	12	50	15	15	13	51
			5	334A	8.8	10.6	18	20	16	50	19	20	17	51
			5	335A	11.5	13.8	22	25	20	50	23	25	21	51
			5	336A	14.0	16.8	26	30	23	50	27	30	24	51
		HIGH	5	—	—	—	12	15	12	50	13	15	13	51
			5	333A	6.0	7.2	14	15	13	50	16	20	14	51
			5	334A	8.8	10.6	19	20	17	50	20	20	18	51
			5	335A	11.5	13.8	23	25	20	50	24	25	22	51
			5	336A	14.0	16.8	26	30	24	50	28	30	25	51
	575-3-60	MED	5	—	—	—	9	15	9	33	11	15	11	35
			5	339A	10.0	9.6	16	20	14	33	18	20	16	35
			5	340A	15.0	14.4	22	25	20	33	24	25	22	35
		HIGH	5	—	—	—	10	15	10	33	12	15	12	35
			5	339A	10.0	9.6	16	20	15	33	19	20	17	35
			5	340A	15.0	14.4	22	25	20	33	25	25	22	35

50FE-A05 MCA MOCP Electrical Data

UNIT SIZE	NOM. V-Ph-Hz	IFM TYPE	STD SCCR kA	HIGH SCCR kA[a]	ELECTRIC HEATER			NO CONVENIENCE OUTLET OR UNPOWERED CONVENIENCE OUTLET							
								No Power Exhaust				With Power Exhaust (powered from unit)			
					CRHEATER ***A00	NOM (kW)	FLA	MCA	Fuse or HACR BRKR	Disconnect Size		MCA	Fuse or HACR BRKR	Disconnect Size	
										FLA	LRA			FLA	LRA
50FE-A05	208/230-1-60	MED	5	10	—	—	—	37	50	36	140	39	60	38	142
			5	10	323A	3.3/4.4	15.9/18.3	37/37	50/50	36/36	140/140	39/39	60/60	38/38	142/142
			5	10	325A	6.5/8.7	31.4/36.3	49/55	50/60	44/50	140/140	51/57	60/60	46/52	142/142
			5	10	327A	9.8/13.0	46.9/54.2	68/77	70/80	62/70	140/140	70/79	70/80	64/73	142/142
			5	10	329A	13.1/17.4	62.8/72.5	88/100	90/100	80/92	140/140	90/102	90/110	83/94	142/142
			5	10	330A	14.4/19.2	69.3/80.0	96/109	100/110	88/100	140/140	98/112	100/125	90/102	142/142
			5	10	331A	15.8/21.0	75.8/87.5	104/119	110/125	95/109	140/140	106/121	110/125	98/111	142/142
		HIGH	5	10	—	—	—	39	60	38	143	41	60	40	145
			5	10	323A	3.3/4.4	15.9/18.3	39/39	60/60	38/38	143/143	41/41	60/60	40/40	145/145
			5	10	325A	6.5/8.7	31.4/36.3	51/57	60/60	47/52	143/143	54/60	60/60	49/55	145/145
			5	10	327A	9.8/13.0	46.9/54.2	71/80	80/80	65/73	143/143	73/82	80/90	67/75	145/145
			5	10	329A	13.1/17.4	62.8/72.5	90/103	100/110	83/94	143/143	93/105	100/110	85/96	145/145
			5	10	330A	14.4/19.2	69.3/80.0	99/112	100/125	90/103	143/143	101/114	110/125	92/105	145/145
			5	10	331A	15.8/21.0	75.8/87.5	107/121	110/125	98/111	143/143	109/124	110/125	100/113	145/145
	208/230-3-60	MED	5	10	—	—	—	26	30	25	134	28	40	27	136
			5	10	323A	3.3/4.4	9.2/10.6	26/26	30/30	25/25	134/134	28/28	40/40	27/27	136/136
			5	10	324A	4.9/6.5	13.6/15.6	26/29	30/30	25/26	134/134	29/31	40/40	27/28	136/136
			5	10	325A	6.5/8.7	18.1/20.9	32/35	35/35	29/32	134/134	34/38	40/40	31/34	136/136
			5	10	328A	12.0/16.0	33.4/38.5	51/57	60/60	47/52	134/134	53/60	60/60	49/55	136/136
			5	10	330A	14.4/19.2	40.0/46.2	59/67	60/70	54/61	134/134	62/69	70/70	56/63	136/136
			5	10	331A	15.8/21.0	43.8/50.5	64/72	70/80	59/66	134/134	66/75	70/80	61/68	136/136
		HIGH	5	10	—	—	—	24	30	23	132	26	30	26	134
			5	10	323A	3.3/4.4	9.2/10.6	24/24	30/30	23/23	132/132	26/26	30/30	26/26	134/134
			5	10	324A	4.9/6.5	13.6/15.6	24/27	30/30	23/24	132/132	27/29	30/30	26/26	134/134
			5	10	325A	6.5/8.7	18.1/20.9	30/33	30/35	27/30	132/132	32/36	35/40	29/33	134/134
			5	10	328A	12.0/16.0	33.4/38.5	49/55	50/60	45/51	132/132	51/58	60/60	47/53	134/134
			5	10	330A	14.4/19.2	40.0/46.2	57/65	60/70	52/59	132/132	60/67	60/70	55/62	134/134
			5	10	331A	15.8/21.0	43.8/50.5	62/70	70/80	57/64	132/132	64/73	70/80	59/67	134/134
	460-3-60	MED	5	10	—	—	—	10	15	10	53	11	15	11	54
			5	10	333A	6.0	7.2	12	15	10	53	13	15	11	54
			5	10	335A	11.5	13.8	20	20	18	53	21	25	19	54
			5	10	336A	14.0	16.8	24	25	21	53	25	25	22	54
			5	10	337A	21.5	25.9	35	35	32	53	36	40	33	54
		HIGH	5	10	—	—	—	11	15	11	55	12	15	12	56
			5	10	333A	6.0	7.2	13	15	11	55	14	15	12	56
			5	10	335A	11.5	13.8	21	25	19	55	22	25	20	56
			5	10	336A	14.0	16.8	25	25	22	55	26	30	23	56
			5	10	337A	21.5	25.9	36	40	33	55	37	40	34	56
	575-3-60	MED	5	—	—	—	—	10	15	9	45	12	15	11	47
			5	—	339A	10.0	9.6	14	15	13	45	17	20	15	47
			5	—	340A	15.0	14.4	20	20	18	45	23	25	20	47
		HIGH	5	—	—	—	—	11	15	10	46	13	15	12	48
			5	—	339A	10.0	9.6	15	15	14	46	18	20	16	48
			5	—	340A	15.0	14.4	21	25	19	46	24	25	21	48

NOTE(S):

a. High SCCR (Short Circuit Current Rating) is not available on the following: units with Humidi-MiZer system, Low Ambient controls, Phase loss monitor, Non-fused disconnect, and 575V models.

50FE-A05 MCA MOCP Electrical Data (cont)

UNIT SIZE	NOM. V-Ph-Hz	IFM TYPE	STD SCCR kA	ELECTRIC HEATER			WITH POWERED CONVENIENCE OUTLET							
							No Power Exhaust				With Power Exhaust (powered from unit)			
				CRHEATER ***A00	NOM (kW)	FLA	MCA	Fuse or HACR BRKR	Disconnect Size		MCA	Fuse or HACR BRKR	Disconnect Size	
									FLA	LRA			FLA	LRA
50FE-A05	208/230-3-60	MED	5	—	—	—	31	40	31	139	33	45	33	141
			5	323A	3.3/4.4	9.2/10.6	31/31	40/40	31/31	139/139	33/33	45/45	33/33	141/141
			5	324A	4.9/6.5	13.6/15.6	32/35	40/40	31/32	139/139	35/37	45/45	33/34	141/141
			5	325A	6.5/8.7	18.1/20.9	38/41	40/45	35/38	139/139	40/44	45/45	37/40	141/141
			5	328A	12.0/16.0	33.4/38.5	57/63	60/70	52/58	139/139	59/66	60/70	54/60	141/141
			5	330A	14.4/19.2	40.0/46.2	65/73	70/80	60/67	139/139	68/75	70/80	62/69	141/141
			5	331A	15.8/21.0	43.8/50.5	70/78	70/80	64/72	139/139	72/81	80/90	66/74	141/141
		HIGH	5	—	—	—	29	40	29	137	31	40	31	139
			5	323A	3.3/4.4	9.2/10.6	29/29	40/40	29/29	137/137	31/31	40/40	31/31	139/139
			5	324A	4.9/6.5	13.6/15.6	30/33	40/40	29/30	137/137	33/35	40/40	31/32	139/139
			5	325A	6.5/8.7	18.1/20.9	36/39	40/40	33/36	137/137	38/42	40/45	35/38	139/139
			5	328A	12.0/16.0	33.4/38.5	55/61	60/70	50/56	137/137	57/64	60/70	52/58	139/139
			5	330A	14.4/19.2	40.0/46.2	63/71	70/80	58/65	137/137	66/73	70/80	60/67	139/139
			5	331A	15.8/21.0	43.8/50.5	68/76	70/80	62/70	137/137	70/79	80/80	64/72	139/139
	460-3-60	MED	5	—	—	—	13	15	12	55	14	15	13	56
			5	333A	6.0	7.2	14	15	13	55	16	20	14	56
			5	335A	11.5	13.8	23	25	20	55	24	25	22	56
			5	336A	14.0	16.8	26	30	24	55	28	30	25	56
			5	337A	21.5	25.9	38	40	34	55	39	40	35	56
		HIGH	5	—	—	—	14	15	13	57	15	20	14	58
			5	333A	6.0	7.2	15	15	14	57	17	20	15	58
			5	335A	11.5	13.8	24	25	21	57	25	25	23	58
			5	336A	14.0	16.8	27	30	25	57	29	30	26	58
			5	337A	21.5	25.9	39	40	35	57	40	40	36	58
	575-3-60	MED	5	—	—	—	12	15	11	47	13	15	13	49
			5	339A	10.0	9.6	16	20	15	47	19	20	17	49
			5	340A	15.0	14.4	22	25	20	47	25	25	22	49
		HIGH	5	—	—	—	12	15	12	48	14	20	14	50
			5	339A	10.0	9.6	17	20	16	48	20	20	18	50
			5	340A	15.0	14.4	23	25	21	48	26	30	23	50

50FE-A06 MCA MOCP Electrical Data

UNIT SIZE	NOM. V-Ph-Hz	IFM TYPE	STD SCCR kA	HIGH SCCR kA[a]	ELECTRIC HEATER			NO CONVENIENCE OUTLET OR UNPOWERED CONVENIENCE OUTLET							
								No Power Exhaust				With Power Exhaust (powered from unit)			
					CRHEATER ***A00	NOM (kW)	FLA	MCA	Fuse or HACR BRKR	Disconnect Size		MCA	Fuse or HACR BRKR	Disconnect Size	
										FLA	LRA			FLA	LRA
50FE-A06	208/230-1-60	MED	5	10	—	—	—	41	60	40	174	43	60	42	176
			5	10	324A	4.9/6.5	23.5/27.1	41/46	60/60	40/42	174/174	44/48	60/60	42/44	176/176
			5	10	325A	6.5/8.7	31.4/36.3	51/57	60/60	47/52	174/174	54/60	60/60	49/55	176/176
			5	10	327A	9.8/13.0	46.9/54.2	71/80	80/80	65/73	174/174	73/82	80/90	67/75	176/176
			5	10	329A	13.1/17.4	62.8/72.5	90/103	100/110	83/94	174/174	93/105	100/110	85/96	176/176
			5	10	331A	15.8/21.0	75.8/87.5	107/121	110/125	98/111	174/174	109/124	110/125	100/113	176/176
		HIGH	5	10	—	—	—	43	60	42	177	45	60	45	179
			5	10	324A	4.9/6.5	23.5/27.1	44/49	60/60	42/45	177/177	47/51	60/60	45/47	179/179
			5	10	325A	6.5/8.7	31.4/36.3	54/60	60/60	50/55	177/177	57/63	60/70	52/57	179/179
			5	10	327A	9.8/13.0	46.9/54.2	74/83	80/90	67/76	177/177	76/85	80/90	70/78	179/179
			5	10	329A	13.1/17.4	62.8/72.5	94/106	100/110	86/97	177/177	96/108	100/110	88/99	179/179
			5	10	331A	15.8/21.0	75.8/87.5	110/124	110/125	101/114	177/177	112/127	125/150	103/116	179/179
	208/230-3-60	MED	5	10	—	—	—	31	45	31	173	33	45	33	175
			5	10	324A	4.9/6.5	13.6/15.6	31/31	45/45	31/31	173/173	33/34	45/45	33/33	175/175
			5	10	326A	7.9/10.5	21.9/25.3	39/44	45/45	36/40	173/173	42/46	45/50	38/42	175/175
			5	10	328A	12.0/16.0	33.4/38.5	54/60	60/60	49/55	173/173	56/62	60/70	51/57	175/175
			5	10	331A	15.8/21.0	43.8/50.5	67/75	70/80	61/69	173/173	69/77	70/80	63/71	175/175
			5	10	332A	18.4/24.5	51.1/58.9	76/86	80/90	69/78	173/173	78/88	80/90	72/81	175/175
		HIGH	5	10	—	—	—	29	40	28	169	31	45	30	171
			5	10	324A	4.9/6.5	13.6/15.6	29/29	40/40	28/28	169/169	31/31	45/45	30/30	171/171
			5	10	326A	7.9/10.5	21.9/25.3	36/40	40/40	33/37	169/169	38/43	45/45	35/39	171/171
			5	10	328A	12.0/16.0	33.4/38.5	50/57	50/60	46/52	169/169	53/59	60/60	48/54	171/171
			5	10	331A	15.8/21.0	43.8/50.5	63/72	70/80	58/66	169/169	66/74	70/80	60/68	171/171
			5	10	332A	18.4/24.5	51.1/58.9	72/82	80/90	66/75	169/169	75/85	80/90	68/77	171/171
	460-3-60	MED	5	10	—	—	—	13	20	12	63	14	20	13	64
			5	10	333A	6.0	7.2	13	20	12	63	14	20	13	64
			5	10	335A	11.5	13.8	20	20	18	63	22	25	19	64
			5	10	336A	14.0	16.8	24	25	22	63	25	25	23	64
			5	10	337A	21.5	25.9	35	40	32	63	37	40	33	64
			5	10	338A	24.0	28.9	39	40	36	63	40	45	37	64
		HIGH	5	10	—	—	—	14	20	13	64	15	20	15	65
			5	10	333A	6.0	7.2	14	20	13	64	15	20	15	65
			5	10	335A	11.5	13.8	22	25	19	64	23	25	21	65
			5	10	336A	14.0	16.8	25	25	23	64	27	30	24	65
			5	10	337A	21.5	25.9	37	40	33	64	38	40	35	65
			5	10	338A	24.0	28.9	40	45	37	64	42	45	38	65
	575-3-60	MED	5	—	—	—	—	11	15	10	53	13	15	13	55
			5	—	340A	15.0	14.4	21	25	19	53	23	25	21	55
			5	—	341A	21.0	20.2	28	30	26	53	31	35	28	55
		HIGH	5	—	—	—	—	12	15	11	54	14	15	13	56
			5	—	340A	15.0	14.4	22	25	20	54	24	25	22	56
			5	—	341A	21.0	20.2	29	30	26	54	31	35	29	56

NOTE(S):

a. High SCCR (Short Circuit Current Rating) is not available on the following: units with Humidi-MiZer system, Low Ambient controls, Phase loss monitor, Non-fused disconnect, and 575V models.

50FE-A06 MCA MOCP Electrical Data (cont)

UNIT SIZE	NOM. V-Ph-Hz	IFM TYPE	STD SCCR kA	ELECTRIC HEATER			WITH POWERED CONVENIENCE OUTLET							
				CRHEATER ***A00	NOM (kW)	FLA	No Power Exhaust				With Power Exhaust (powered from unit)			
							MCA	Fuse or HACR BRKR	Disconnect Size		MCA	Fuse or HACR BRKR	Disconnect Size	
									FLA	LRA			FLA	LRA
50FE-A06	208/230-3-60	MED	5	—	—	—	36	50	36	178	38	50	39	180
			5	324A	4.9/6.5	13.6/15.6	36/37	50/50	36/36	178/178	38/40	50/50	39/39	180/180
			5	326A	7.9/10.5	21.9/25.3	45/50	50/50	41/45	178/178	48/52	50/60	43/47	180/180
			5	328A	12.0/16.0	33.4/38.5	60/66	60/70	55/60	178/178	62/68	70/70	57/63	180/180
			5	331A	15.8/21.0	43.8/50.5	73/81	80/90	66/74	178/178	75/83	80/90	69/76	180/180
			5	332A	18.4/24.5	51.1/58.9	82/92	90/100	75/84	178/178	84/94	90/100	77/86	180/180
		HIGH	5	—	—	—	34	45	33	174	35	50	36	176
			5	324A	4.9/6.5	13.6/15.6	34/34	45/45	33/33	174/174	35/36	50/50	36/36	176/176
			5	326A	7.9/10.5	21.9/25.3	42/46	45/50	38/42	174/174	44/49	50/50	40/44	176/176
			5	328A	12.0/16.0	33.4/38.5	56/63	60/70	51/57	174/174	59/65	60/70	54/59	176/176
			5	331A	15.8/21.0	43.8/50.5	69/78	70/80	63/71	174/174	72/80	80/80	66/73	176/176
			5	332A	18.4/24.5	51.1/58.9	78/88	80/90	72/81	174/174	81/91	90/100	74/83	176/176
	460-3-60	MED	5	—	—	—	15	20	15	65	16	20	16	66
			5	333A	6.0	7.2	15	20	15	65	16	20	16	66
			5	335A	11.5	13.8	23	25	21	65	24	25	22	66
			5	336A	14.0	16.8	27	30	24	65	28	30	25	66
			5	337A	21.5	25.9	38	40	35	65	39	40	36	66
			5	338A	24.0	28.9	42	45	38	65	43	45	39	66
		HIGH	5	—	—	—	16	20	16	66	17	20	17	67
			5	333A	6.0	7.2	16	20	16	66	17	20	17	67
			5	335A	11.5	13.8	24	25	22	66	26	30	23	67
			5	336A	14.0	16.8	28	30	25	66	29	30	27	67
			5	337A	21.5	25.9	39	40	36	66	41	45	37	67
			5	338A	24.0	28.9	43	45	39	66	44	45	40	67
	575-3-60	MED	5	—	—	—	13	15	12	55	15	20	14	57
			5	340A	15.0	14.4	23	25	21	55	25	30	23	57
			5	341A	21.0	20.2	30	30	27	55	33	35	30	57
		HIGH	5	—	—	—	13	15	13	56	15	20	15	58
			5	340A	15.0	14.4	24	25	22	56	26	30	24	58
			5	341A	21.0	20.2	31	35	28	56	34	35	30	58

50FE-M07 MCA MOCP Electrical Data

UNIT SIZE	NOM. V-Ph-Hz	IFM TYPE	STD SCCR kA	HIGH SCCR kA[a]	ELECTRIC HEATER			NO CONVENIENCE OUTLET OR UNPOWERED CONVENIENCE OUTLET							
								No Power Exhaust				With Power Exhaust (powered from unit)			
					CRHEATER ***A00	NOM (kW)	FLA	MCA	Fuse or HACR BRKR	Disconnect Size		MCA	Fuse or HACR BRKR	Disconnect Size	
										FLA	LRA			FLA	LRA
50FE-M07	208/230-3-60	MED	5	10	—	—	—	31	45	30	174	33	50	32	176
			5	10	324A	4.9/6.5	13.6/15.6	31/31	45/45	30/30	174/174	33/33	50/50	32/32	176/176
			5	10	326A	7.9/10.5	21.9/25.3	35/39	45/45	32/35	174/174	37/41	50/50	34/38	176/176
			5	10	328A	12.0/16.0	33.4/38.5	49/55	50/60	45/51	174/174	51/58	60/60	47/53	176/176
			5	10	331A	15.8/21.0	43.8/50.5	62/70	70/80	57/64	174/174	64/73	70/80	59/67	176/176
			5	10	332A	18.4/24.5	51.1/58.9	71/81	80/90	65/74	174/174	74/83	80/90	67/76	176/176
		HIGH	5	10	—	—	—	32	50	31	175	34	50	33	177
			5	10	324A	4.9/6.5	13.6/15.6	32/32	50/50	31/31	175/175	34/34	50/50	33/33	177/177
			5	10	326A	7.9/10.5	21.9/25.3	36/40	50/50	33/37	175/175	38/43	50/50	35/39	177/177
			5	10	328A	12.0/16.0	33.4/38.5	50/57	50/60	46/52	175/175	53/59	60/60	48/54	177/177
			5	10	331A	15.8/21.0	43.8/50.5	63/72	70/80	58/66	175/175	66/74	70/80	60/68	177/177
			5	10	332A	18.4/24.5	51.1/58.9	72/82	80/90	66/75	175/175	75/85	80/90	68/77	177/177
	460-3-60	MED	5	10	—	—	—	16	25	15	77	17	25	16	78
			5	10	333A	6.0	7.2	16	25	15	77	17	25	16	78
			5	10	335A	11.5	13.8	21	25	19	77	22	25	20	78
			5	10	336A	14.0	16.8	25	25	22	77	26	30	23	78
			5	10	337A	21.5	25.9	36	40	33	77	37	40	34	78
			5	10	338A	24.0	28.9	40	40	36	77	41	45	37	78
		HIGH	5	10	—	—	—	16	25	16	77	17	25	17	78
			5	10	333A	6.0	7.2	16	25	16	77	17	25	17	78
			5	10	335A	11.5	13.8	22	25	19	77	23	25	21	78
			5	10	336A	14.0	16.8	25	25	23	77	27	30	24	78
			5	10	337A	21.5	25.9	37	40	33	77	38	40	35	78
			5	10	338A	24.0	28.9	40	45	37	77	42	45	38	78
	575-3-60	MED	5	—	—	—	—	12	15	11	63	14	15	13	65
			5	—	340A	15.0	14.4	21	25	19	63	24	25	21	65
			5	—	341A	21.0	20.2	29	30	26	63	31	35	28	65
		HIGH	5	—	—	—	—	12	15	11	64	14	20	14	66
			5	—	340A	15.0	14.4	22	25	20	64	24	25	22	66
			5	—	341A	21.0	20.2	29	30	26	64	31	35	29	66

NOTE(S):

a. High SCCR (Short Circuit Current Rating) is not available on the following: units with Humidi-MiZer system, Low Ambient controls, Phase loss monitor, Non-fused disconnect, and 575V models.

50FE-M07 MCA MOCP Electrical Data (cont)

UNIT SIZE	NOM. V-Ph-Hz	IFM TYPE	STD SCCR kA	ELECTRIC HEATER			WITH POWERED CONVENIENCE OUTLET							
							No Power Exhaust				With Power Exhaust (powered from unit)			
				CRHEATER ***A00	NOM (kW)	FLA	MCA	Fuse or HACR BRKR	Disconnect Size		MCA	Fuse or HACR BRKR	Disconnect Size	
									FLA	LRA			FLA	LRA
50FE-M07	208/230-3-60	MED	5	—	—	—	36	50	35	179	38	50	37	181
			5	324A	4.9/6.5	13.6/15.6	36/36	50/50	35/35	179/179	38/38	50/50	37/37	181/181
			5	326A	7.9/10.5	21.9/25.3	41/45	50/50	37/41	179/179	43/47	50/50	39/43	181/181
			5	328A	12.0/16.0	33.4/38.5	55/61	60/70	50/56	179/179	57/64	60/70	52/58	181/181
			5	331A	15.8/21.0	43.8/50.5	68/76	70/80	62/70	179/179	70/79	80/80	64/72	181/181
			5	332A	18.4/24.5	51.1/58.9	77/87	80/90	71/80	179/179	80/89	80/90	73/82	181/181
		HIGH	5	—	—	—	37	50	36	180	39	50	39	182
			5	324A	4.9/6.5	13.6/15.6	37/37	50/50	36/36	180/180	39/39	50/50	39/39	182/182
			5	326A	7.9/10.5	21.9/25.3	42/46	50/50	38/42	180/180	44/49	50/50	40/44	182/182
			5	328A	12.0/16.0	33.4/38.5	56/63	60/70	51/57	180/180	59/65	60/70	54/59	182/182
			5	331A	15.8/21.0	43.8/50.5	69/78	70/80	63/71	180/180	72/80	80/80	66/73	182/182
			5	332A	18.4/24.5	51.1/58.9	78/88	80/90	72/81	180/180	81/91	90/100	74/83	182/182
	460-3-60	MED	5	—	—	—	18	25	17	79	19	25	19	80
			5	333A	6.0	7.2	18	25	17	79	19	25	19	80
			5	335A	11.5	13.8	24	25	21	79	25	25	23	80
			5	336A	14.0	16.8	27	30	25	79	29	30	26	80
			5	337A	21.5	25.9	39	40	35	79	40	40	36	80
			5	338A	24.0	28.9	43	45	39	79	44	45	40	80
		HIGH	5	—	—	—	19	25	18	79	20	25	19	80
			5	333A	6.0	7.2	19	25	18	79	20	25	19	80
			5	335A	11.5	13.8	24	25	22	79	26	30	23	80
			5	336A	14.0	16.8	28	30	25	79	29	30	27	80
			5	337A	21.5	25.9	39	40	36	79	41	45	37	80
			5	338A	24.0	28.9	43	45	39	79	44	45	40	80
	575-3-60	MED	5	—	—	—	13	15	13	65	15	20	15	67
			5	340A	15.0	14.4	23	25	21	65	26	30	23	67
			5	341A	21.0	20.2	31	35	28	65	33	35	30	67
		HIGH	5	—	—	—	14	15	13	66	16	20	16	68
			5	340A	15.0	14.4	24	25	22	66	26	30	24	68
			5	341A	21.0	20.2	31	35	28	66	34	35	30	68

50FE-A04 1-Phase Electric Heat Data — Without Non-Fused Disconnect

50FE UNIT SIZE	NOM. V-Ph-Hz	IFM TYPE	ELECTRIC HEATER PART NUMBER	NOM (kW)	APPLICATION (kW)	APPLICATION OUTPUT (MBH)	SINGLE POINT OR JUNCTION PART NUMBER CRSINGLEXXXA00			
							No CO or Unpowered CO		With PWRD CO	
							No PE	With PE (pwrd fr/unit)	No PE	With PE (pwrd fr/unit)
-A04	208/230-1-60	MED	CRHEATER323A00	4.4	3.3/4.0	11.3/13.8	—	—	—	—
			CRHEATER324A00	6.5	4.9/6.0	16.7/20.4	—	—	—	—
			CRHEATER325A00	8.7	6.5/8.0	22.3/27.3	037	037	037	040
			CRHEATER326A00	10.5	7.9/9.6	26.9/32.9	040	040	040	040
			CRHEATER327A00	13.0	9.8/11.9	33.3/40.7	040	040	040	040
		HIGH	CRHEATER323A00	4.4	3.3/4.0	11.3/13.8	—	—	—	—
			CRHEATER324A00	6.5	4.9/6.0	16.7/20.4	—	—	—	037
			CRHEATER325A00	8.7	6.5/8.0	22.3/27.3	037	037	040	040
			CRHEATER326A00	10.5	7.9/9.6	26.9/32.9	040	040	040	040
			CRHEATER327A00	13.0	9.8/11.9	33.3/40.7	040	040	040	040

50FE-A04 1-Phase Electric Heat Data — With Non-Fused Disconnect

50FE UNIT SIZE	NOM. V-Ph-Hz	IFM TYPE	ELECTRIC HEATER PART NUMBER	NOM (kW)	APPLICATION (kW)	APPLICATION OUTPUT (MBH)	SINGLE POINT OR JUNCTION PART NUMBER CRSINGLEXXXA00			
							No CO or Unpowered CO		With PWRD CO	
							No PE	With PE (pwrd fr/unit)	No PE	With PE (pwrd fr/unit)
-A04	208/230-1-60	MED	CRHEATER323A00	4.4	3.3/4.0	11.3/13.8	037	037	037	037
			CRHEATER324A00	6.5	4.9/6.0	16.7/20.4	037	037	037	037
			CRHEATER325A00	8.7	6.5/8.0	22.3/27.3	037	037	037	040
			CRHEATER326A00	10.5	7.9/9.6	26.9/32.9	040	040	040	040
			CRHEATER327A00	13.0	9.8/11.9	33.3/40.7	040	040	040	040
		HIGH	CRHEATER323A00	4.4	3.3/4.0	11.3/13.8	037	037	037	037
			CRHEATER324A00	6.5	4.9/6.0	16.7/20.4	037	037	037	037
			CRHEATER325A00	8.7	6.5/8.0	22.3/27.3	037	037	040	040
			CRHEATER326A00	10.5	7.9/9.6	26.9/32.9	040	040	040	040
			CRHEATER327A00	13.0	9.8/11.9	33.3/40.7	040	040	040	040

50FE-A04 3-Phase Electric Heat Data — Without Non-Fused Disconnect

50FE UNIT SIZE	NOM. V-Ph-Hz	IFM TYPE	ELECTRIC HEATER PART NUMBER	NOM (kW)	APPLICATION (kW)	APPLICATION OUTPUT (MBH)	SINGLE POINT OR JUNCTION PART NUMBER CRSINGLEXXXA00			
							No CO or Unpowered CO		With PWRD CO	
							No PE	With PE (pwrd fr/unit)	No PE	With PE (pwrd fr/unit)
-A04	208/230-3-60	MED	CRHEATER323A00	4.4	3.3/4.0	11.3/13.8	—	—	—	—
			CRHEATER324A00	6.5	4.9/6.0	16.7/20.4	—	—	—	—
			CRHEATER325A00	8.7	6.5/8.0	22.3/27.3	—	—	—	—
			CRHEATER326A00	10.5	7.9/9.6	26.9/32.9	—	—	—	—
			CRHEATER328A00	16.0	12.0/14.7	41.0/50.1	037	037	038	038
		HIGH	CRHEATER323A00	4.4	3.3/4.0	11.3/13.8	—	—	—	—
			CRHEATER324A00	6.5	4.9/6.0	16.7/20.4	—	—	—	—
			CRHEATER325A00	8.7	6.5/8.0	22.3/27.3	—	—	—	—
			CRHEATER326A00	10.5	7.9/9.6	26.9/32.9	—	—	—	—
			CRHEATER328A00	16.0	12.0/14.7	41.0/50.1	037	037	038	038
	460-3-60	MED	CRHEATER333A00	6.0	5.5	18.8	—	—	—	—
			CRHEATER334A00	8.8	8.1	27.6	—	—	—	—
			CRHEATER335A00	11.5	10.6	36.0	—	—	—	—
			CRHEATER336A00	14.0	12.9	43.9	—	—	—	—
		HIGH	CRHEATER333A00	6.0	5.5	18.8	—	—	—	—
			CRHEATER334A00	8.8	8.1	27.6	—	—	—	—
			CRHEATER335A00	11.5	10.6	36.0	—	—	—	—
			CRHEATER336A00	14.0	12.9	43.9	—	—	—	—
	575-3-60	MED	CRHEATER339A00	10.0	9.2	31.3	—	—	—	—
			CRHEATER340A00	15.0	13.8	47.0	—	—	—	—
		HIGH	CRHEATER339A00	10.0	9.2	31.3	—	—	—	—
			CRHEATER340A00	15.0	13.8	47.0	—	—	—	—

50FE-A04 3-Phase Electric Heat Data — With Non-Fused Disconnect

50FE UNIT SIZE	NOM. V-Ph-Hz	IFM TYPE	ELECTRIC HEATER PART NUMBER	NOM (kW)	APPLICATION (kW)	APPLICATION OUTPUT (MBH)	SINGLE POINT OR JUNCTION PART NUMBER CRSINGLEXXXA00			
							No CO or Unpowered CO		With PWRD CO	
							No PE	With PE (pwrd fr/unit)	No PE	With PE (pwrd fr/unit)
-A04	208/230-3-60	MED	CRHEATER323A00	4.4	3.3/4.0	11.3/13.8	037	037	037	037
			CRHEATER324A00	6.5	4.9/6.0	16.7/20.4	037	037	037	037
			CRHEATER325A00	8.7	6.5/8.0	22.3/27.3	037	037	037	037
			CRHEATER326A00	10.5	7.9/9.6	26.9/32.9	037	037	037	037
			CRHEATER328A00	16.0	12.0/14.7	41.0/50.1	037	037	038	038
		HIGH	CRHEATER323A00	4.4	3.3/4.0	11.3/13.8	037	037	037	037
			CRHEATER324A00	6.5	4.9/6.0	16.7/20.4	037	037	037	037
			CRHEATER325A00	8.7	6.5/8.0	22.3/27.3	037	037	037	037
			CRHEATER326A00	10.5	7.9/9.6	26.9/32.9	037	037	037	037
			CRHEATER328A00	16.0	12.0/14.7	41.0/50.1	037	037	038	038
	460-3-60	MED	CRHEATER333A00	6.0	5.5	18.8	—	—	—	—
			CRHEATER334A00	8.8	8.1	27.6	—	—	—	—
			CRHEATER335A00	11.5	10.6	36.0	—	—	—	—
			CRHEATER336A00	14.0	12.9	43.9	—	—	—	—
		HIGH	CRHEATER333A00	6.0	5.5	18.8	—	—	—	—
			CRHEATER334A00	8.8	8.1	27.6	—	—	—	—
			CRHEATER335A00	11.5	10.6	36.0	—	—	—	—
			CRHEATER336A00	14.0	12.9	43.9	—	—	—	—
	575-3-60	MED	CRHEATER339A00	10.0	9.2	31.3	—	—	—	—
			CRHEATER340A00	15.0	13.8	47.0	—	—	—	—
		HIGH	CRHEATER339A00	10.0	9.2	31.3	—	—	—	—
			CRHEATER340A00	15.0	13.8	47.0	—	—	—	—

50FE-A05 1-Phase Electric Heat Data — Without Non-Fused Disconnect

50FE UNIT SIZE	NOM. V-Ph-Hz	IFM TYPE	ELECTRIC HEATER PART NUMBER	NOM (kW)	APPLICATION (kW)	APPLICATION OUTPUT (MBH)	SINGLE POINT OR JUNCTION PART NUMBER CRSINGLEXXXA00			
							No CO or Unpowered CO		With PWRD CO	
							No PE	With PE (pwrd fr/unit)	No PE	With PE (pwrd fr/unit)
-A05	208/230-1-60	MED	CRHEATER323A00	4.4	3.3/4.0	11.3/13.8	—	—	—	—
			CRHEATER325A00	8.7	6.5/8.0	22.3/27.3	037	037	040	040
			CRHEATER327A00	13.0	9.8/11.9	33.3/40.7	040	040	040	040
			CRHEATER329A00	17.4	13.1/16.0	44.6/54.5	040	040	040	040
			CRHEATER330A00	19.2	14.4/17.6	49.2/60.2	040	040	040	040
			CRHEATER331A00	21.0	15.8/19.3	53.8/65.8	040	040	040	040
		HIGH	CRHEATER323A00	4.4	3.3/4.0	11.3/13.8	—	—	—	—
			CRHEATER325A00	8.7	6.5/8.0	22.3/27.3	037	037	040	040
			CRHEATER327A00	13.0	9.8/11.9	33.3/40.7	040	040	040	040
			CRHEATER329A00	17.4	13.1/16.0	44.6/54.5	040	040	040	040
			CRHEATER330A00	19.2	14.4/17.6	49.2/60.2	040	040	040	040
			CRHEATER331A00	21.0	15.8/19.3	53.8/65.8	040	040	040	040

50FE-A05 1-Phase Electric Heat Data — With Non-Fused Disconnect

50FE UNIT SIZE	NOM. V-Ph-Hz	IFM TYPE	ELECTRIC HEATER PART NUMBER	NOM (kW)	APPLICATION (kW)	APPLICATION OUTPUT (MBH)	SINGLE POINT OR JUNCTION PART NUMBER CRSINGLEXXXA00			
							No CO or Unpowered CO		With PWRD CO	
							No PE	With PE (pwrd fr/unit)	No PE	With PE (pwrd fr/unit)
-A05	208/230-1-60	MED	CRHEATER323A00	4.4	3.3/4.0	11.3/13.8	037	037	037	037
			CRHEATER325A00	8.7	6.5/8.0	22.3/27.3	037	037	040	040
			CRHEATER327A00	13.0	9.8/11.9	33.3/40.7	040	040	040	040
			CRHEATER329A00	17.4	13.1/16.0	44.6/54.5	040	040	040	040
			CRHEATER330A00	19.2	14.4/17.6	49.2/60.2	040	040	040	040
			CRHEATER331A00	21.0	15.8/19.3	53.8/65.8	040	040	040	040
		HIGH	CRHEATER323A00	4.4	3.3/4.0	11.3/13.8	037	037	037	037
			CRHEATER325A00	8.7	6.5/8.0	22.3/27.3	037	037	040	040
			CRHEATER327A00	13.0	9.8/11.9	33.3/40.7	040	040	040	040
			CRHEATER329A00	17.4	13.1/16.0	44.6/54.5	040	040	040	040
			CRHEATER330A00	19.2	14.4/17.6	49.2/60.2	040	040	040	040
			CRHEATER331A00	21.0	15.8/19.3	53.8/65.8	040	040	040	040

50FE-A05 3-Phase Electric Heat Data — Without Non-Fused Disconnect

50FE UNIT SIZE	NOM. V-Ph-Hz	IFM TYPE	ELECTRIC HEATER PART NUMBER	NOM (kW)	APPLICATION (kW)	APPLICATION OUTPUT (MBH)	SINGLE POINT OR JUNCTION PART NUMBER CRSINGLEXXXA00			
							No CO or Unpowered CO		With PWRD CO	
							No PE	With PE (pwrd fr/unit)	No PE	With PE (pwrd fr/unit)
-05A	208/230-3-60	MED	CRHEATER323A00	4.4	3.3/4.0	11.3/13.8	—	—	—	—
			CRHEATER324A00	6.5	4.9/6.0	16.7/20.4	—	—	—	—
			CRHEATER325A00	8.7	6.5/8.0	22.3/27.3	—	—	—	—
			CRHEATER328A00	16.0	12.0/14.7	41.0/50.1	037	037	038	038
			CRHEATER330A00	19.2	14.4/17.6	49.2/60.2	038	038	038	038
			CRHEATER331A00	21.0	15.8/19.3	53.8/65.8	038	038	038	038
		HIGH	CRHEATER323A00	4.4	3.3/4.0	11.3/13.8	—	—	—	—
			CRHEATER324A00	6.5	4.9/6.0	16.7/20.4	—	—	—	—
			CRHEATER325A00	8.7	6.5/8.0	22.3/27.3	—	—	—	—
			CRHEATER328A00	16.0	12.0/14.7	41.0/50.1	037	037	038	038
			CRHEATER330A00	19.2	14.4/17.6	49.2/60.2	038	038	038	038
			CRHEATER331A00	21.0	15.8/19.3	53.8/65.8	038	038	038	038
	460-3-60	MED	CRHEATER333A00	6.0	5.5	18.8	—	—	—	—
			CRHEATER335A00	11.5	10.6	36.0	—	—	—	—
			CRHEATER336A00	14.0	12.9	43.9	—	—	—	—
			CRHEATER337A00	21.5	19.7	67.4	037	037	037	037
		HIGH	CRHEATER333A00	6.0	5.5	18.8	—	—	—	—
			CRHEATER335A00	11.5	10.6	36.0	—	—	—	—
			CRHEATER336A00	14.0	12.9	43.9	—	—	—	—
			CRHEATER337A00	21.5	19.7	67.4	037	037	037	037
	575-3-60	MED	CRHEATER339A00	10.0	9.2	31.3	—	—	—	—
			CRHEATER340A00	15.0	13.8	47.0	—	—	—	—
		HIGH	CRHEATER339A00	10.0	9.2	31.3	—	—	—	—
			CRHEATER340A00	15.0	13.8	47.0	—	—	—	—

50FE-A05 3-Phase Electric Heat Data — With Non-Fused Disconnect

50FE UNIT SIZE	NOM. V-Ph-Hz	IFM TYPE	ELECTRIC HEATER PART NUMBER	NOM (kW)	APPLICATION (kW)	APPLICATION OUTPUT (MBH)	SINGLE POINT OR JUNCTION PART NUMBER CRSINGLEXXXA00			
							No CO or Unpowered CO		With PWRD CO	
							No PE	With PE (pwrd fr/unit)	No PE	With PE (pwrd fr/unit)
-A05	208/230-3-60	MED	CRHEATER323A00	4.4	3.3/4.0	11.3/13.8	037	037	037	037
			CRHEATER324A00	6.5	4.9/6.0	16.7/20.4	037	037	037	037
			CRHEATER325A00	8.7	6.5/8.0	22.3/27.3	037	037	037	037
			CRHEATER328A00	16.0	12.0/14.7	41.0/50.1	037	037	038	038
			CRHEATER330A00	19.2	14.4/17.6	49.2/60.2	038	038	038	038
			CRHEATER331A00	21.0	15.8/19.3	53.8/65.8	038	038	038	038
		HIGH	CRHEATER323A00	4.4	3.3/4.0	11.3/13.8	037	037	037	037
			CRHEATER324A00	6.5	4.9/6.0	16.7/20.4	037	037	037	037
			CRHEATER325A00	8.7	6.5/8.0	22.3/27.3	037	037	037	037
			CRHEATER328A00	16.0	12.0/14.7	41.0/50.1	037	037	038	038
			CRHEATER330A00	19.2	14.4/17.6	49.2/60.2	038	038	038	038
			CRHEATER331A00	21.0	15.8/19.3	53.8/65.8	038	038	038	038
	460-3-60	MED	CRHEATER333A00	6.0	5.5	18.8	—	—	—	—
			CRHEATER335A00	11.5	10.6	36.0	—	—	—	—
			CRHEATER336A00	14.0	12.9	43.9	—	—	—	—
			CRHEATER337A00	21.5	19.7	67.4	037	037	037	037
		HIGH	CRHEATER333A00	6.0	5.5	18.8	—	—	—	—
			CRHEATER335A00	11.5	10.6	36.0	—	—	—	—
			CRHEATER336A00	14.0	12.9	43.9	—	—	—	—
			CRHEATER337A00	21.5	19.7	67.4	037	037	037	037
	575-3-60	MED	CRHEATER339A00	10.0	9.2	31.3	—	—	—	—
			CRHEATER340A00	15.0	13.8	47.0	—	—	—	—
		HIGH	CRHEATER339A00	10.0	9.2	31.3	—	—	—	—
			CRHEATER340A00	15.0	13.8	47.0	—	—	—	—

50FE-A06 1-Phase Electric Heat Data — Without Non-Fused Disconnect

50FE UNIT SIZE	NOM. V-Ph-Hz	IFM TYPE	ELECTRIC HEATER PART NUMBER	NOM (kW)	APPLICATION (kW)	APPLICATION OUTPUT (MBH)	SINGLE POINT OR JUNCTION PART NUMBER CRSINGLEXXXA00			
							No CO or Unpowered CO		With PWRD CO	
							No PE	With PE (pwrd fr/unit)	No PE	With PE (pwrd fr/unit)
-A06	208/230-1-60	MED	CRHEATER324A00	6.5	4.9/6.0	16.7/20.4	—	—	037	037
			CRHEATER325A00	8.7	6.5/8.0	22.3/27.3	037	037	040	040
			CRHEATER327A00	13.0	9.8/11.9	33.3/40.7	040	040	040	040
			CRHEATER329A00	17.4	13.1/16.0	44.6/54.5	040	040	040	040
			CRHEATER331A00	21.0	15.8/19.3	53.8/65.8	040	040	040	040
		HIGH	CRHEATER324A00	6.5	4.9/6.0	16.7/20.4	—	037	037	037
			CRHEATER325A00	8.7	6.5/8.0	22.3/27.3	037	040	040	040
			CRHEATER327A00	13.0	9.8/11.9	33.3/40.7	040	040	040	040
			CRHEATER329A00	17.4	13.1/16.0	44.6/54.5	040	040	040	040
			CRHEATER331A00	21.0	15.8/19.3	53.8/65.8	040	040	040	040

50FE-A06 1-Phase Electric Heat Data — With Non-Fused Disconnect

50FE UNIT SIZE	NOM. V-Ph-Hz	IFM TYPE	ELECTRIC HEATER PART NUMBER	NOM (kW)	APPLICATION (kW)	APPLICATION OUTPUT (MBH)	SINGLE POINT OR JUNCTION PART NUMBER CRSINGLEXXXA00			
							No CO or Unpowered CO		With PWRD CO	
							No PE	With PE (pwrd fr/unit)	No PE	With PE (pwrd fr/unit)
-A06	208/230-1-60	MED	CRHEATER324A00	6.5	4.9/6.0	16.7/20.4	037	037	037	037
			CRHEATER325A00	8.7	6.5/8.0	22.3/27.3	037	037	040	040
			CRHEATER327A00	13.0	9.8/11.9	33.3/40.7	040	040	040	040
			CRHEATER329A00	17.4	13.1/16.0	44.6/54.5	040	040	040	040
			CRHEATER331A00	21.0	15.8/19.3	53.8/65.8	040	040	040	040
		HIGH	CRHEATER324A00	6.5	4.9/6.0	16.7/20.4	037	037	037	037
			CRHEATER325A00	8.7	6.5/8.0	22.3/27.3	037	040	040	040
			CRHEATER327A00	13.0	9.8/11.9	33.3/40.7	040	040	040	040
			CRHEATER329A00	17.4	13.1/16.0	44.6/54.5	040	040	040	040
			CRHEATER331A00	21.0	15.8/19.3	53.8/65.8	040	040	040	040

50FE-A06 3-Phase Electric Heat Data — Without Non-Fused Disconnect

50FE UNIT SIZE	NOM. V-Ph-Hz	IFM TYPE	ELECTRIC HEATER PART NUMBER	NOM (kW)	APPLICATION (kW)	APPLICATION OUTPUT (MBH)	SINGLE POINT OR JUNCTION PART NUMBER CRSINGLEXXXA00			
							No CO or Unpowered CO		With PWRD CO	
							No PE	With PE (pwrd fr/unit)	No PE	With PE (pwrd fr/unit)
-A06	208/230-3-60	MED	CRHEATER324A00	6.5	4.9/6.0	16.7/20.4	—	—	—	—
			CRHEATER326A00	10.5	7.9/9.6	26.9/32.9	—	—	—	037
			CRHEATER328A00	16.0	12.0/14.7	41.0/50.1	037	038	038	038
			CRHEATER331A00	21.0	15.8/19.3	53.8/65.8	038	038	038	038
			CRHEATER332A00	24.5	18.4/22.5	62.8/76.8	038	038	038	038
		HIGH	CRHEATER324A00	6.5	4.9/6.0	16.7/20.4	—	—	—	—
			CRHEATER326A00	10.5	7.9/9.6	26.9/32.9	—	—	—	—
			CRHEATER328A00	16.0	12.0/14.7	41.0/50.1	037	037	038	038
			CRHEATER331A00	21.0	15.8/19.3	53.8/65.8	038	038	038	038
			CRHEATER332A00	24.5	18.4/22.5	62.8/76.8	038	038	038	038
	460-3-60	MED	CRHEATER333A00	6.0	5.5	18.8	—	—	—	—
			CRHEATER335A00	11.5	10.6	36.0	—	—	—	—
			CRHEATER336A00	14.0	12.9	43.9	—	—	—	—
			CRHEATER337A00	21.5	19.7	67.4	037	037	037	037
			CRHEATER338A00	24.0	22.0	75.2	037	037	037	037
		HIGH	CRHEATER333A00	6.0	5.5	18.8	—	—	—	—
			CRHEATER335A00	11.5	10.6	36.0	—	—	—	—
			CRHEATER336A00	14.0	12.9	43.9	—	—	—	—
			CRHEATER337A00	21.5	19.7	67.4	037	037	037	037
			CRHEATER338A00	24.0	22.0	75.2	037	037	037	037
	575-3-60	MED	CRHEATER340A00	15.0	13.8	47.0	—	—	—	—
			CRHEATER341A00	21.0	19.3	65.8	037	037	037	037
		HIGH	CRHEATER340A00	15.0	13.8	47.0	—	—	—	—
			CRHEATER341A00	21.0	19.3	65.8	037	037	037	037

50FE-A06 3-Phase Electric Heat Data — With Non-Fused Disconnect

50FE UNIT SIZE	NOM. V-Ph-Hz	IFM TYPE	ELECTRIC HEATER PART NUMBER	NOM (kW)	APPLICATION (kW)	APPLICATION OUTPUT (MBH)	SINGLE POINT OR JUNCTION PART NUMBER CRSINGLEXXXA00			
							No CO or Unpowered CO		With PWRD CO	
							No PE	With PE (pwrd fr/unit)	No PE	With PE (pwrd fr/unit)
-A06	208/230-3-60	MED	CRHEATER324A00	6.5	4.9/6.0	16.7/20.4	037	037	037	037
			CRHEATER326A00	10.5	7.9/9.6	26.9/32.9	037	037	037	037
			CRHEATER328A00	16.0	12.0/14.7	41.0/50.1	037	038	038	038
			CRHEATER331A00	21.0	15.8/19.3	53.8/65.8	038	038	038	038
			CRHEATER332A00	24.5	18.4/22.5	62.8/76.8	038	038	038	038
		HIGH	CRHEATER324A00	6.5	4.9/6.0	16.7/20.4	037	037	037	037
			CRHEATER326A00	10.5	7.9/9.6	26.9/32.9	037	037	037	037
			CRHEATER328A00	16.0	12.0/14.7	41.0/50.1	037	037	038	038
			CRHEATER331A00	21.0	15.8/19.3	53.8/65.8	038	038	038	038
			CRHEATER332A00	24.5	18.4/22.5	62.8/76.8	038	038	038	038
	460-3-60	MED	CRHEATER333A00	6.0	5.5	18.8	—	—	—	—
			CRHEATER335A00	11.5	10.6	36.0	—	—	—	—
			CRHEATER336A00	14.0	12.9	43.9	—	—	—	—
			CRHEATER337A00	21.5	19.7	67.4	037	037	037	037
			CRHEATER338A00	24.0	22.0	75.2	037	037	037	037
		HIGH	CRHEATER333A00	6.0	5.5	18.8	—	—	—	—
			CRHEATER335A00	11.5	10.6	36.0	—	—	—	—
			CRHEATER336A00	14.0	12.9	43.9	—	—	—	—
			CRHEATER337A00	21.5	19.7	67.4	037	037	037	037
			CRHEATER338A00	24.0	22.0	75.2	037	037	037	037
	575-3-60	MED	CRHEATER340A00	15.0	13.8	47.0	—	—	—	—
			CRHEATER341A00	21.0	19.3	65.8	037	037	037	037
		HIGH	CRHEATER340A00	15.0	13.8	47.0	—	—	—	—
			CRHEATER341A00	21.0	19.3	65.8	037	037	037	037

50FE-*07 Electric Heat Data — Without Non-Fused Disconnect

50FE UNIT SIZE	NOM. V-Ph-Hz	IFM TYPE	ELECTRIC HEATER PART NUMBER	NOM (kW)	APPLICATION (kW)	APPLICATION OUTPUT (MBH)	SINGLE POINT OR JUNCTION PART NUMBER CRSINGLEXXXA00			
							No CO or Unpowered CO		With PWRD CO	
							No PE	With PE (pwrd fr/unit)	No PE	With PE (pwrd fr/unit)
-*07	208/230-3-60	MED	CRHEATER324A00	6.5	4.9/6.0	16.7/20.4	—	—	—	—
			CRHEATER326A00	10.5	7.9/9.6	26.9/32.9	—	—	—	—
			CRHEATER328A00	16.0	12.0/14.7	41.0/50.1	037	037	038	038
			CRHEATER331A00	21.0	15.8/19.3	53.8/65.8	038	038	038	038
			CRHEATER332A00	24.5	18.4/22.5	62.8/76.8	038	038	038	038
		HIGH	CRHEATER324A00	6.5	4.9/6.0	16.7/20.4	—	—	—	—
			CRHEATER326A00	10.5	7.9/9.6	26.9/32.9	—	—	—	—
			CRHEATER328A00	16.0	12.0/14.7	41.0/50.1	037	037	038	038
			CRHEATER331A00	21.0	15.8/19.3	53.8/65.8	038	038	038	038
			CRHEATER332A00	24.5	18.4/22.5	62.8/76.8	038	038	038	038
	460-3-60	MED	CRHEATER333A00	6.0	5.5	18.8	—	—	—	—
			CRHEATER335A00	11.5	10.6	36.0	—	—	—	—
			CRHEATER336A00	14.0	12.9	43.9	—	—	—	—
			CRHEATER337A00	21.5	19.7	67.4	037	037	037	037
			CRHEATER338A00	24.0	22.0	75.2	037	037	037	037
		HIGH	CRHEATER333A00	6.0	5.5	18.8	—	—	—	—
			CRHEATER335A00	11.5	10.6	36.0	—	—	—	—
			CRHEATER336A00	14.0	12.9	43.9	—	—	—	—
			CRHEATER337A00	21.5	19.7	67.4	037	037	037	037
			CRHEATER338A00	24.0	22.0	75.2	037	037	037	037
	575-3-60	MED	CRHEATER340A00	15.0	13.8	47.0	—	—	—	—
			CRHEATER341A00	21.0	19.3	65.8	037	037	037	037
		HIGH	CRHEATER340A00	15.0	13.8	47.0	—	—	—	—
			CRHEATER341A00	21.0	19.3	65.8	037	037	037	037

50FE-*07 Electric Heat Data — With Non-Fused Disconnect

50FE UNIT SIZE	NOM. V-Ph-Hz	IFM TYPE	ELECTRIC HEATER PART NUMBER	NOM (kW)	APPLICATION (kW)	APPLICATION OUTPUT (MBH)	SINGLE POINT OR JUNCTION PART NUMBER CRSINGLEXXXA00			
							No CO or Unpowered CO		With PWRD CO	
							No PE	With PE (pwrd fr/unit)	No PE	With PE (pwrd fr/unit)
-*07	208/230-3-60	MED	CRHEATER324A00	6.5	4.9/6.0	16.7/20.4	037	037	037	037
			CRHEATER326A00	10.5	7.9/9.6	26.9/32.9	037	037	037	037
			CRHEATER328A00	16.0	12.0/14.7	41.0/50.1	037	037	038	038
			CRHEATER331A00	21.0	15.8/19.3	53.8/65.8	038	038	038	038
			CRHEATER332A00	24.5	18.4/22.5	62.8/76.8	038	038	038	038
		HIGH	CRHEATER324A00	6.5	4.9/6.0	16.7/20.4	037	037	037	037
			CRHEATER326A00	10.5	7.9/9.6	26.9/32.9	037	037	037	037
			CRHEATER328A00	16.0	12.0/14.7	41.0/50.1	037	037	038	038
			CRHEATER331A00	21.0	15.8/19.3	53.8/65.8	038	038	038	038
			CRHEATER332A00	24.5	18.4/22.5	62.8/76.8	038	038	038	038
	460-3-60	MED	CRHEATER333A00	6.0	5.5	18.8	—	—	—	—
			CRHEATER335A00	11.5	10.6	36.0	—	—	—	—
			CRHEATER336A00	14.0	12.9	43.9	—	—	—	—
			CRHEATER337A00	21.5	19.7	67.4	037	037	037	037
			CRHEATER338A00	24.0	22.0	75.2	037	037	037	037
		HIGH	CRHEATER333A00	6.0	5.5	18.8	—	—	—	—
			CRHEATER335A00	11.5	10.6	36.0	—	—	—	—
			CRHEATER336A00	14.0	12.9	43.9	—	—	—	—
			CRHEATER337A00	21.5	19.7	67.4	037	037	037	037
			CRHEATER338A00	24.0	22.0	75.2	037	037	037	037
	575-3-60	MED	CRHEATER340A00	15.0	13.8	47.0	—	—	—	—
			CRHEATER341A00	21.0	19.3	65.8	037	037	037	037
		HIGH	CRHEATER340A00	15.0	13.8	47.0	—	—	—	—
			CRHEATER341A00	21.0	19.3	65.8	037	037	037	037

Typical Control Wiring Diagram — Electromechanical with POL224 — 48FE 04-06 Units Shown

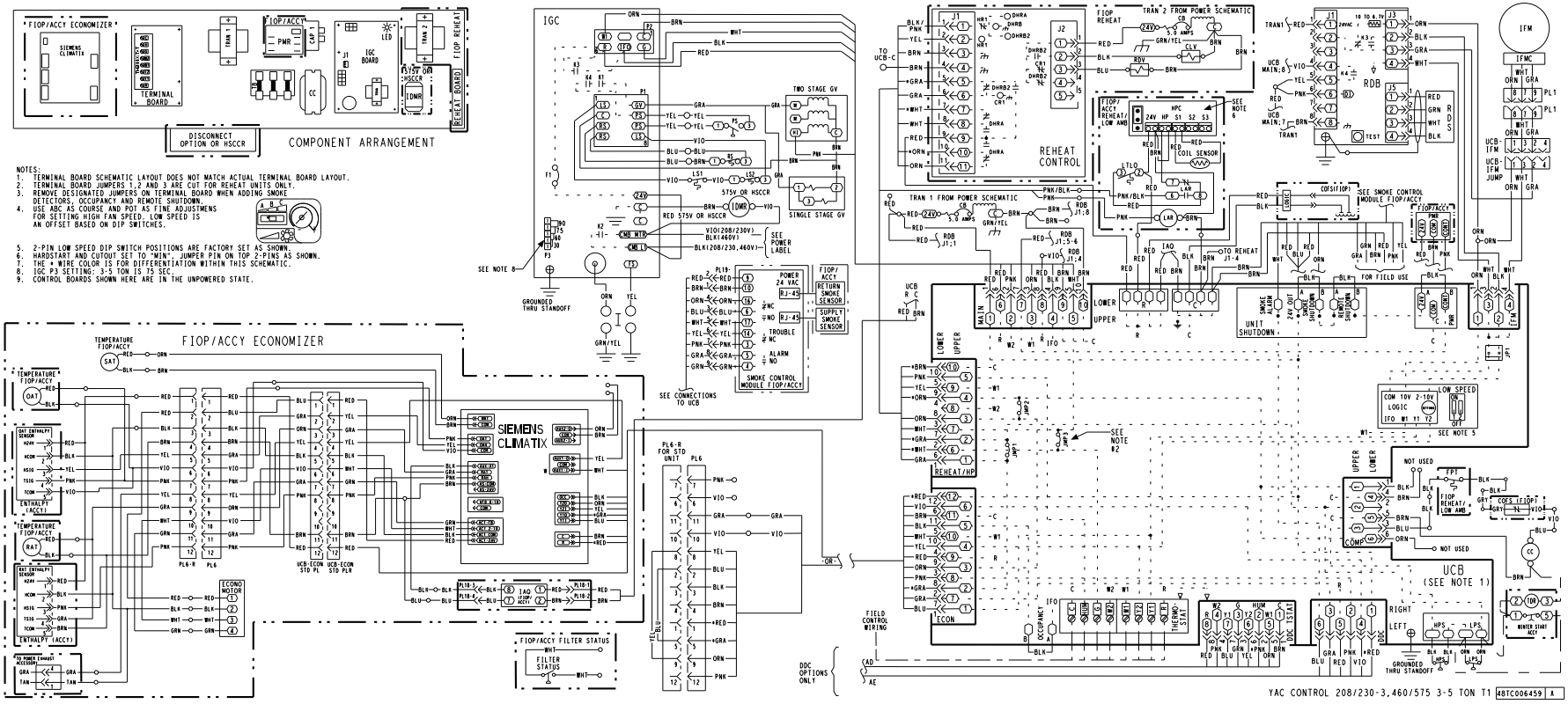

Typical Control Wiring Diagram — Electromechanical with POL224 — 48FE 04-06 Ultra Low NOx Units Shown

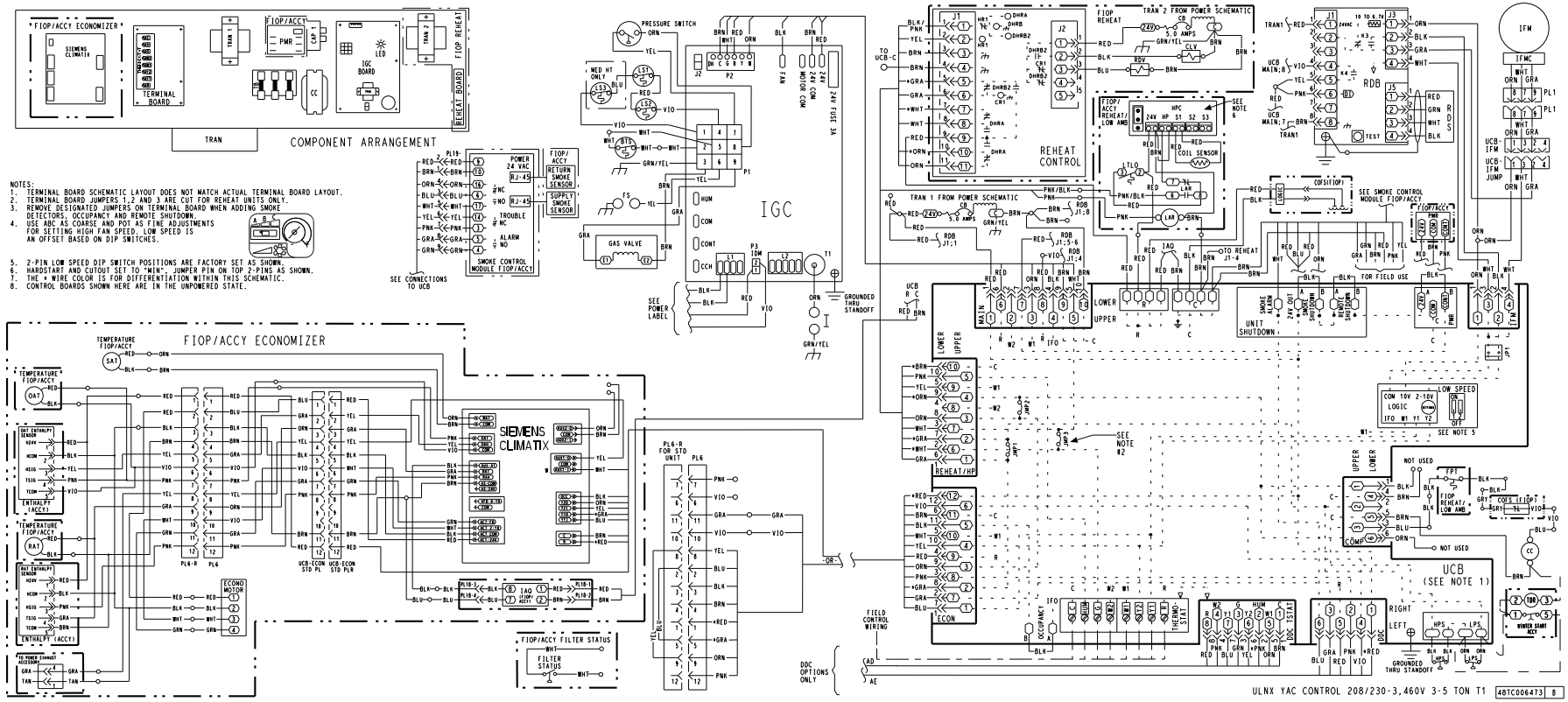

Typical Control Wiring Diagram — Electromechanical with POL224 — 48FE 07 Units Shown

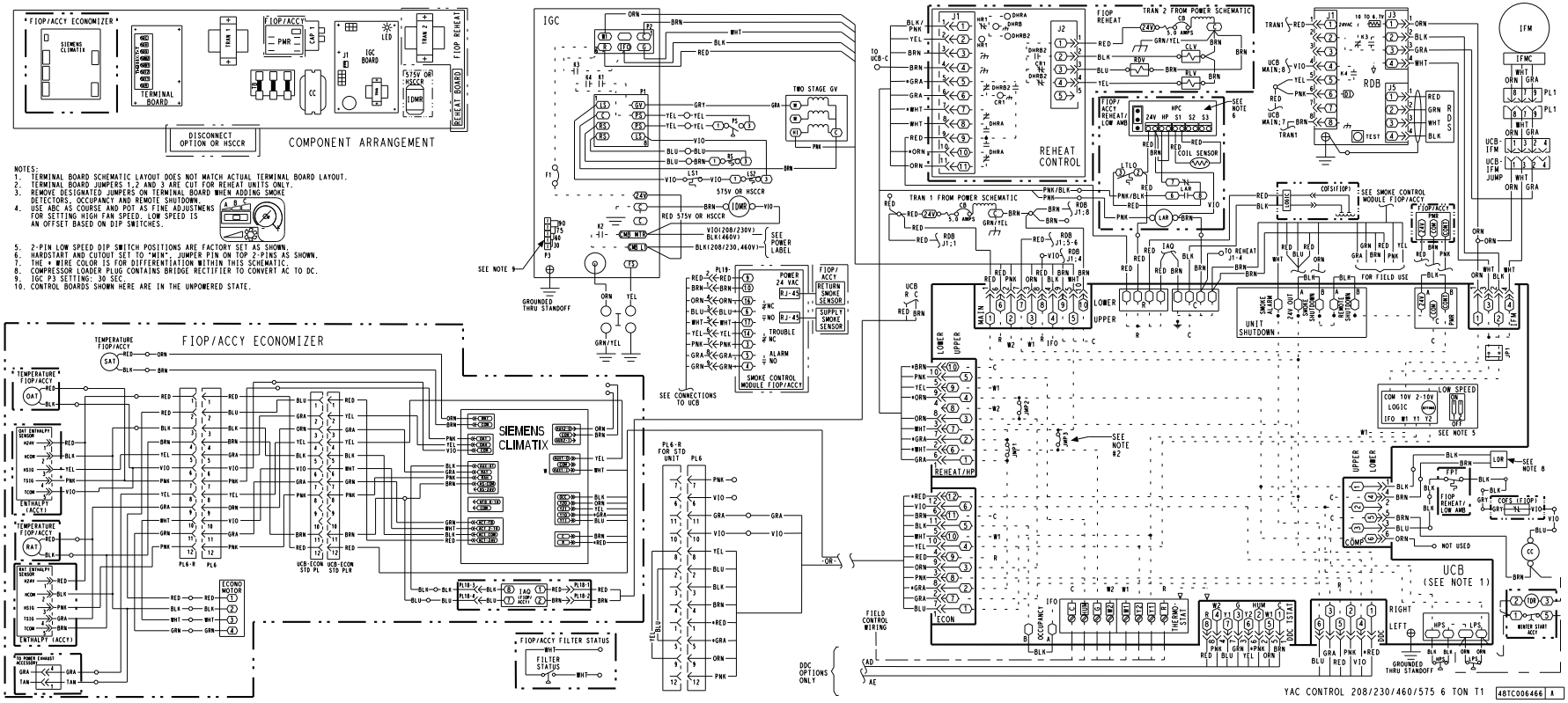

Typical Control Wiring Diagram — SystemVu™ Controller — 48FE 04-06 Units Shown

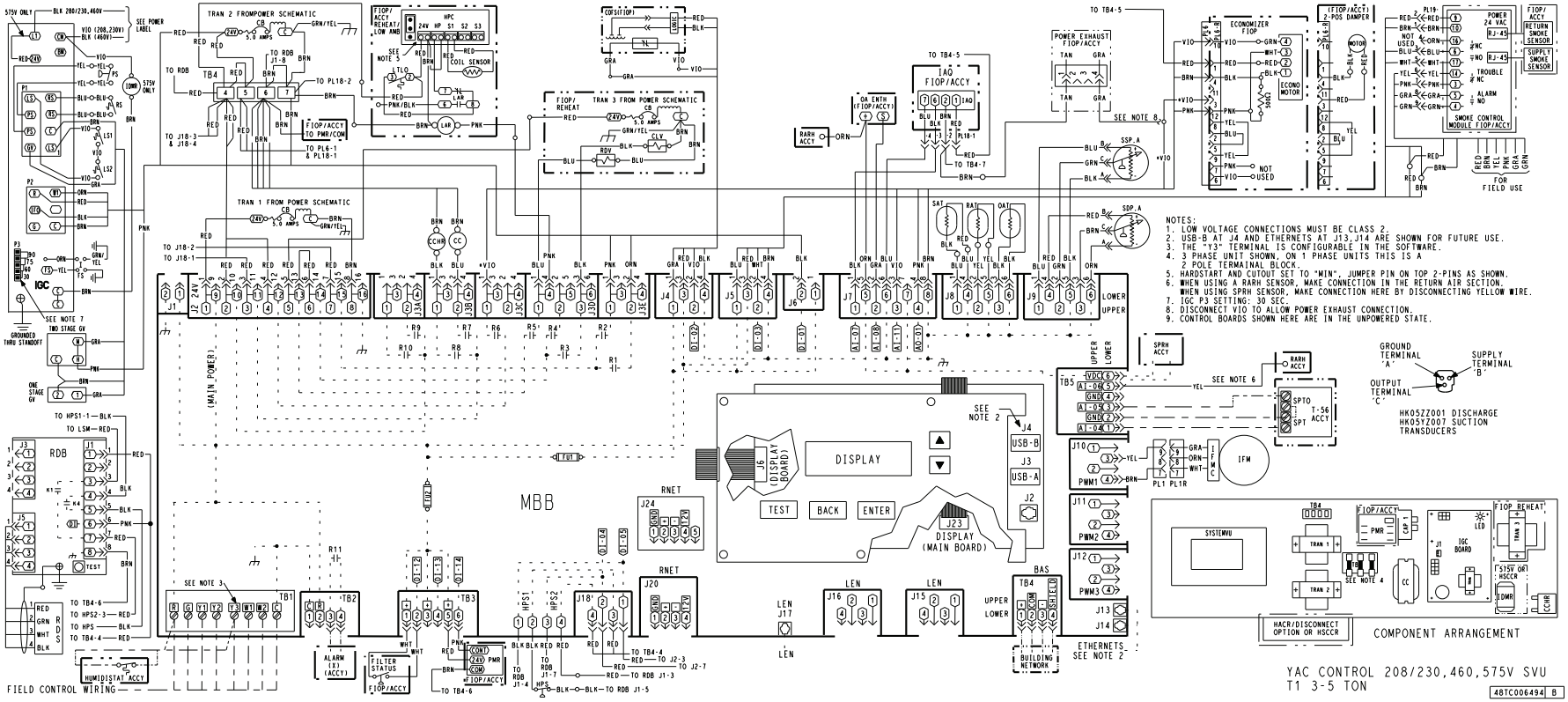

Typical Control Wiring Diagram — SystemVu™ Controller — 48FE 04-06 Ultra Low NOx Units Shown

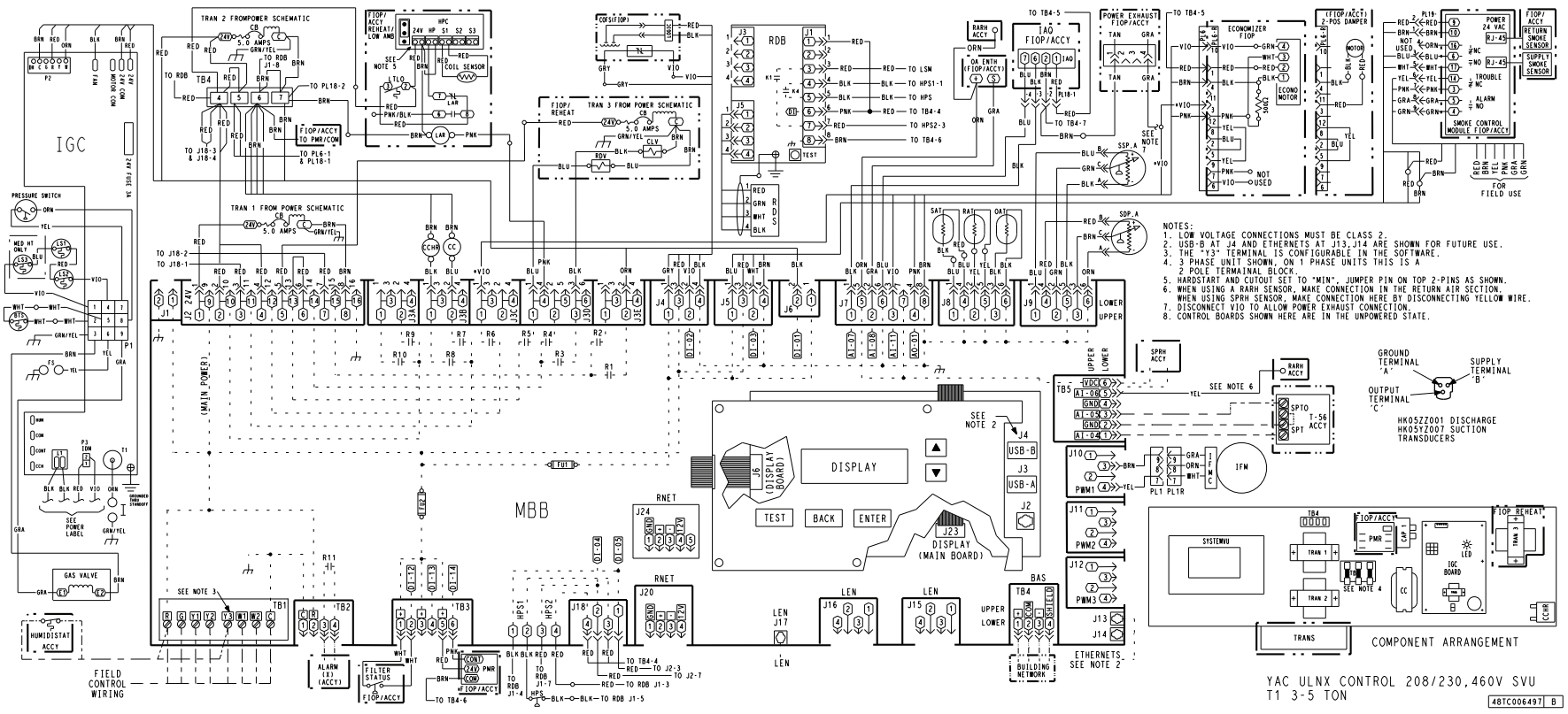

Typical Control Wiring Diagram — SystemVu™ Controller — 48FE 07 Units Shown

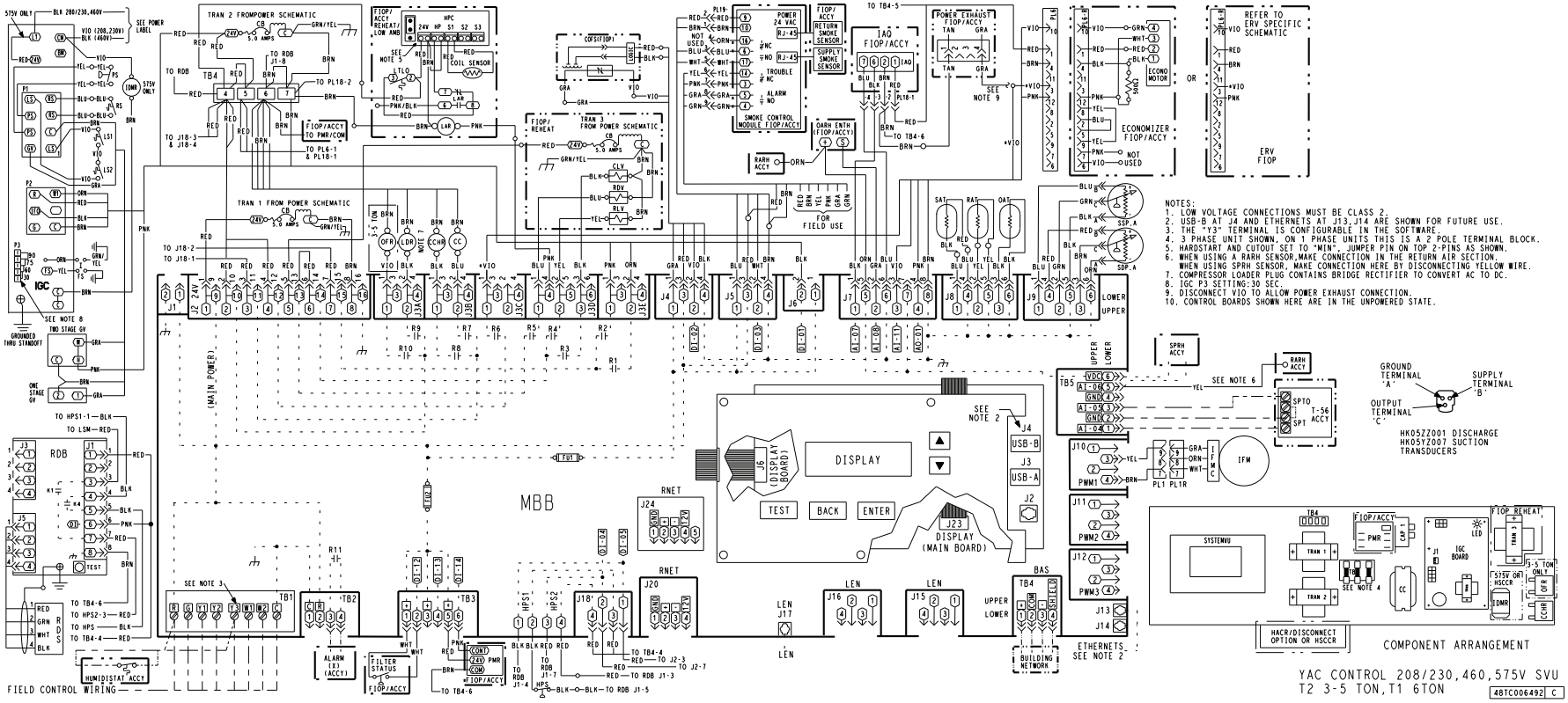

Typical Power Wiring Diagram for Electromechanical Units, 48FE 04-07, 460/575-3-60 Units Shown

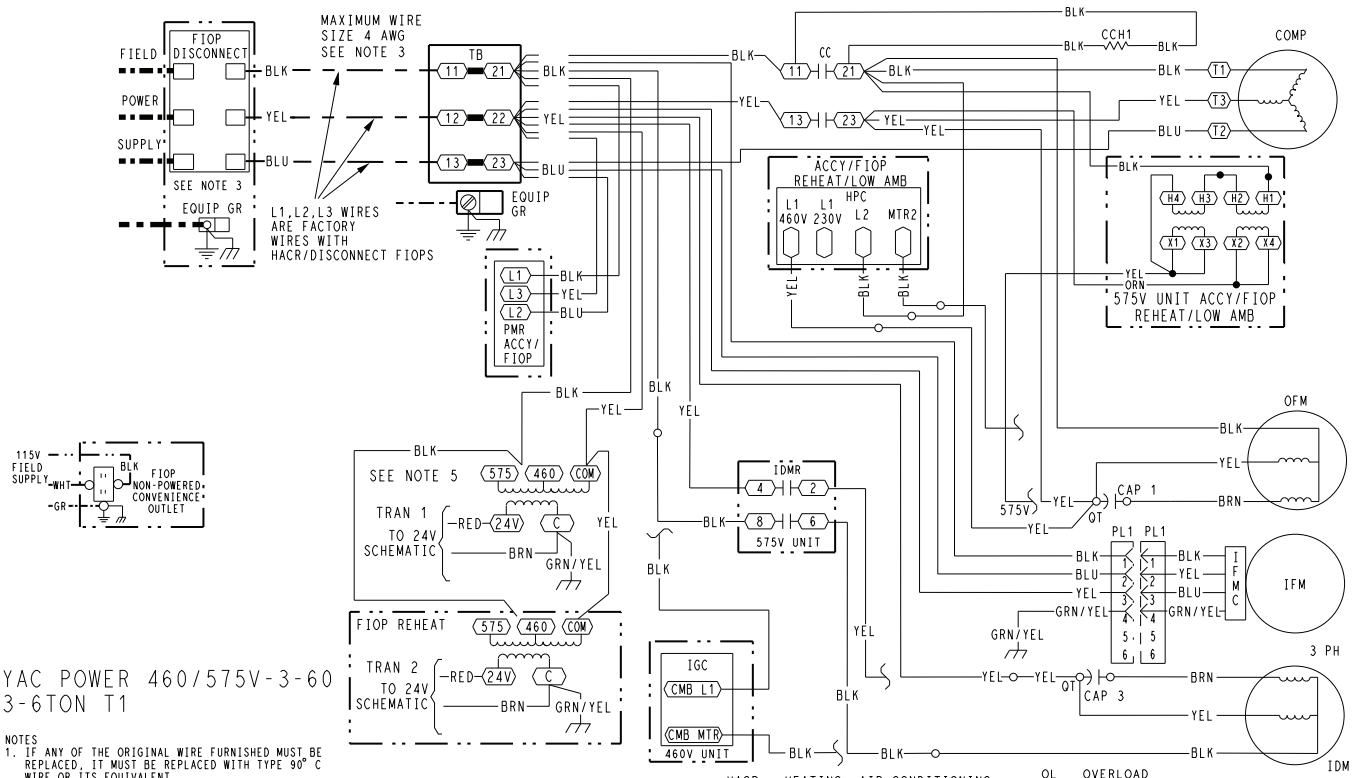

YAC POWER 460/575V-3-60
3-6TON T1

NOTES
1. IF ANY OF THE ORIGINAL WIRE FURNISHED MUST BE REPLACED, IT MUST BE REPLACED WITH TYPE 90° C WIRE OR ITS EQUIVALENT.
2. COMPRESSOR AND FAN MOTORS ARE THERMALLY PROTECTED.
3. USE COPPER CONDUCTOR ONLY.
4. DO NOT DISCONNECT POWER PLUG OR SIGNAL WIRE WHILE UNDER LOAD.
5. TRANSFORMER IS DEDICATED BASED ON UNIT VOLTAGE. TAPS ONLY SHOWN TO SIMPLIFY SCHEMATIC.

LEGEND

(X)	MARKED WIRE
(X)	TERMINAL (MARKED)
○	TERMINAL (UNMARKED)
[X]	TERMINAL BLOCK
●	SPLICE
(●)	SPLICE (MARKED)
———	FACTORY WIRING
— ——— —	FIELD CONTROL WIRING
- - - - - -	FIELD POWER WIRING
- - - - - - -	CIRCUIT BOARD TRACE
——— · · —	ACCESSORY OR OPTIONAL WIRING

ACCY	ACCESSORY
AUX	AUXILIARY
AWG	AMERICAN WIRE GAGE
BA	BUILDING AUTOMATION NETWORK
CC	CONTACTOR,COMPRESSOR
C	COMMON
CAP	CAPACITOR
CB	CIRCUIT BREAKER
CCH	CRANKCASE HEATER
CCHR	CRANKCASE HEATER RELAY
CCHTS	CRANKCASE HEATER TEMP SWITCH
CLO	COMPRESSOR LOCKOUT
CLV	COOLING LIQUID VALVE
CMB	CENTRIFUGAL MOTOR BLOWER
COFS	CONDENSATE OVERFLOW SWITCH
COM	SIGNAL COMMON
COMP	COMPRESSOR MOTOR
DDC	DIRECT DIGITAL CONTROL
DFB	DEFROST BOARD
DFT	DEFROST THERMOSTAT
EHR	ELECTRIC HEAT RELAY
ENTH	ENTHALPY
EQUIP	EQUIPMENT
ERV	ENERGY RECOVERY VENTILATOR
ESL	ENTHALPY SENSOR - LOW
FB	FUSE BLOCK
FIOP	FACTORY INSTALLED OPTION
FPT	FREEZE PROTECTION THERMOSTAT
FS	FLAME SWITCH
FST	FAN HOUSING TEMP SENSOR
FU	FUSE
G	THERMOSTAT FAN CALL
GR(GND)	GROUND
GV	GAS VALVE

HACR	HEATING, AIR-CONDITIONING, REFRIGERATION BREAKER
HGRH	HOT GAS REHEAT
HPC	HEAD PRESSURE CONTROL
HPS	HIGH PRESSURE SWITCH
HR	HEATER RELAY
HUM	HUMIDISTAT
IAQ	INDOOR AIR QUALITY SENSORS
IDM	INDUCED DRAFT MOTOR
IDMR	INDUCED DRAFT RELAY
IFM	INDOOR FAN MOTOR
IFMC	INDOOR FAN MOTOR CONTROL
IFO	INDOOR FAN ON SIGNAL
IGC	INTEGRATED GAS CONTROL
I	IGNITOR
IRH	INDOOR RELATIVE HUMIDITY
JMP	JUMPER
L1	LINE 1
LA	LOW AMBIENT LOCKOUT
LAR	LOW AMBIENT RELAY
LAS	LOW AMBIENT SWITCH
LDR	COMPRESSOR LOADER
LEN	LOCAL EQUIPMENT NETWORK
LOC	LOSS OF CHARGE
LOOP PWR	CURRENT LOOP POWER
LPS	LOW PRESSURE SWITCH
LS	LIMIT SWITCH
LSM	LIMIT SWITCH (MANUAL RESET)
LTLO	LOW TEMP LOCKOUT
MBB	MAIN BASE BOARD
MOV	METAL OXIDE VARISTOR
MTR	MOTOR
OAQ	OUTDOOR AIR QUALITY
OAT	OUTDOOR AIR TEMP. SEN
OFM	OUTDOOR FAN MOTOR
OFR	OUTDOOR FAN RELAY

OL	OVERLOAD
PER	POWER EXHAUST RELAY
PH	PHASE
PL	PLUG ASSEMBLY
POT	POTENTIOMETER
PMR	PHASE MONITOR RELAY
PS	PRESSURE SWITCH
PWM	PULSE WIDTH MODULATION
QT	QUADRUPLE TERMINAL
R	THERMOSTAT POWER
RAT	RETURN AIR TEMP. SEN
RDB	REFRIGERANT DISSIPATION BOARD
RDS	REFRIGERANT DISSIPATION SENSOR
RDV	REHEAT DISCHARGE VALVE
RH	RELATIVE HUMIDITY
RLV	REHEAT LIQUID VALVE
RNET	LOCAL ACCESS NETWORK
RS	ROLLOUT SWITCH
RVS	REVERSING VALVE SOLENOID
SAT	SUPPLY AIR TEMP SENSOR
SDP	SYSTEM DISCHARGE PRESSURE
SPRH	SPACE RELATIVE HUMIDITY
SPT	SPACE TEMPERATURE SENSOR
SPTO	SPACE TEMPERATURE OFFSET
SSP	SYSTEM SUCTION PRESSURE
STD	STANDARD
SW	SWITCH
TB	TERMINAL BLOCK
TDR	TIME DELAY RELAY
TRAN	TRANSFORMER
UCB	UNIT CONTROL BOARD
W1	1st STAGE OF HEATING CALL
W2	2nd STAGE OF HEATING CALL
Y1	1st STAGE OF COOLING CALL
Y2	2nd STAGE OF COOLING CALL

48TC002992 | G

Typical Power Wiring Diagram for Electromechanical Units, 48FE 04-06 Ultra Low NOx Units, 460-3-60 Unit Shown

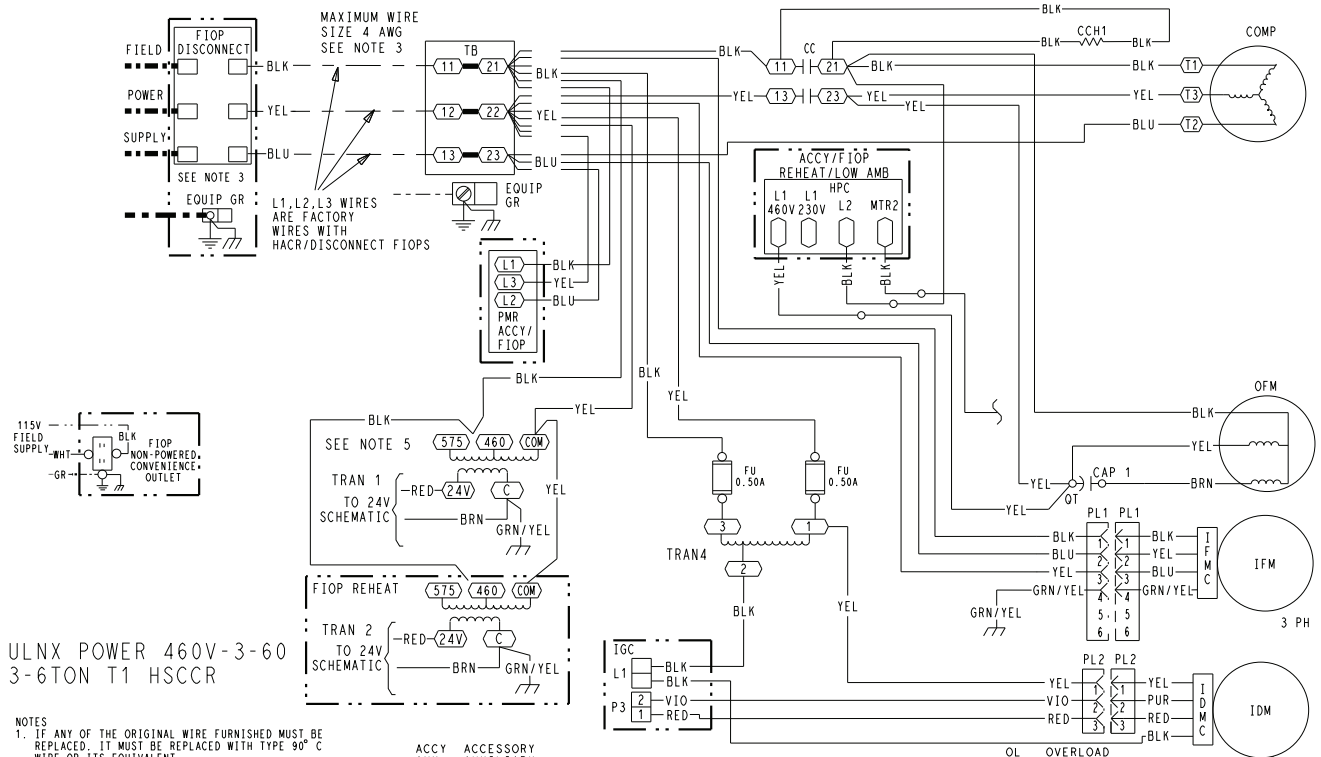

NOTES
1. IF ANY OF THE ORIGINAL WIRE FURNISHED MUST BE REPLACED, IT MUST BE REPLACED WITH TYPE 90° C WIRE OR ITS EQUIVALENT.
2. COMPRESSOR AND FAN MOTORS ARE THERMALLY PROTECTED.
3. USE COPPER CONDUCTOR ONLY.
4. DO NOT DISCONNECT POWER PLUG OR SIGNAL WIRE WHILE UNDER LOAD.
5. TRANSFORMER IS DEDICATED BASED ON UNIT VOLTAGE. TAPS ONLY SHOWN TO SIMPLIFY SCHEMATIC.

LEGEND

- MARKED WIRE
- TERMINAL (MARKED)
- TERMINAL (UNMARKED)
- TERMINAL BLOCK
- SPLICE
- SPLICE (MARKED)
- FACTORY WIRING
- FIELD CONTROL WIRING
- FIELD POWER WIRING
- CIRCUIT BOARD TRACE
- ACCESSORY OR OPTIONAL WIRING

ACCY	ACCESSORY
AUX	AUXILIARY
AWG	AMERICAN WIRE GAGE
BA	BUILDING AUTOMATION NETWORK
CC	CONTACTOR,COMPRESSOR
C	COMMON
CAP	CAPACITOR
CB	CIRCUIT BREAKER
CCH	CRANKCASE HEATER
CCHR	CRANKCASE HEATER RELAY
CCHTS	CRANKCASE HEATER TEMP SWITCH
CLO	COMPRESSOR LOCKOUT
CLV	COOLING LIQUID VALVE
CMB	CENTRIFUGAL MOTOR BLOWER
COFS	CONDENSATE OVERFLOW SWITCH
COM	SIGNAL COMMON
COMP	COMPRESSOR MOTOR
DDC	DIRECT DIGITAL CONTROL
DFB	DEFROST BOARD
DFT	DEFROST THERMOSTAT
EHR	ELECTRIC HEAT RELAY
ENTH	ENTHALPY
EQUIP	EQUIPMENT
ERV	ENERGY RECOVERY VENTILATOR
ESL	ENTHALPY SENSOR - LOW
FB	FUSE BLOCK
FIOP	FACTORY INSTALLED OPTION
FPT	FREEZE PROTECTION THERMOSTAT
FS	FLAME SWITCH
FST	FAN HOUSING TEMP SENSOR
FU	FUSE
G	THERMOSTAT FAN CALL
GR(GND)	GROUND
GV	GAS VALVE
HACR	HEATING, AIR-CONDITIONING, REFRIGERATION BREAKER
HGRH	HOT GAS REHEAT
HPC	HEAD PRESSURE CONTROL
HPS	HIGH PRESSURE SWITCH
HR	HEATER RELAY
HUM	HUMIDISTAT
IAQ	INDOOR AIR QUALITY SENSORS
IDM	INDUCED DRAFT MOTOR
IDMC	INDUCER DRAFT MOTOR CONTROLLER
IDMR	INDUCED DRAFT RELAY
IFM	INDOOR FAN MOTOR
IFMC	INDOOR FAN MOTOR CONTROL
IFO	INDOOR FAN ON SIGNAL
IGC	INTEGRATED GAS CONTROL
I	IGNITOR
IRH	INDOOR RELATIVE HUMIDITY
JMP	JUMPER
L1	LINE 1
LA	LOW AMBIENT LOCKOUT
LAR	LOW AMBIENT RELAY
LAS	LOW AMBIENT SWITCH
LDR	COMPRESSOR LOADER
LEN	LOCAL EQUIPMENT NETWORK
LOC	LOSS OF CHARGE
LOOP PWR	CURRENT LOOP POWER
LPS	LOW PRESSURE SWITCH
LS	LIMIT SWITCH
LSM	LIMIT SWITCH (MANUAL RESET)
LTLO	LOW TEMP LOCKOUT
MBB	MAIN BASE BOARD
MOV	METAL OXIDE VARISTOR
MTR	MOTOR
OAQ	OUTDOOR AIR QUALITY
OAT	OUTDOOR AIR TEMP. SEN
OFM	OUTDOOR FAN MOTOR
OFR	OUTDOOR FAN RELAY
OL	OVERLOAD
PER	POWER EXHAUST RELAY
PH	PHASE
PL	PLUG ASSEMBLY
POT	POTENTIOMETER
PMR	PHASE MONITOR RELAY
PS	PRESSURE SWITCH
PWM	PULSE WIDTH MODULATION
QT	QUADRUPLE TERMINAL
R	THERMOSTAT POWER
RAT	RETURN AIR TEMP. SEN
RDB	REFRIGERANT DISSIPATION BOARD
RDS	REFRIGERANT DISSIPATION SENSOR
RDV	REHEAT DISCHARGE VALVE
RH	RELATIVE HUMIDITY
RLV	REHEAT LIQUID VALVE
RNET	LOCAL ACCESS NETWORK
RS	ROLLOUT SWITCH
RVS	REVERSING VALVE SOLENOID
SAT	SUPPLY AIR TEMP SENSOR
SDP	SYSTEM DISCHARGE PRESSURE
SPRH	SPACE RELATIVE HUMIDITY
SPT	SPACE TEMPERATURE SENSOR
SPTO	SPACE TEMPERATURE OFFSET
SSP	SYSTEM SUCTION PRESSURE
STD	STANDARD
SW	SWITCH
TB	TERMINAL BLOCK
TDR	TIME DELAY RELAY
TRAN	TRANSFORMER
UCB	UNIT CONTROL BOARD
W1	1st STAGE OF HEATING CALL
W2	2nd STAGE OF HEATING CALL
Y1	1st STAGE OF COOLING CALL
Y2	2nd STAGE OF COOLING CALL

48TC004290 | H

Typical Power Wiring Diagram for SystemVu™ Controller Units, 48FE 04-07, 460/575-3-60 Units Shown

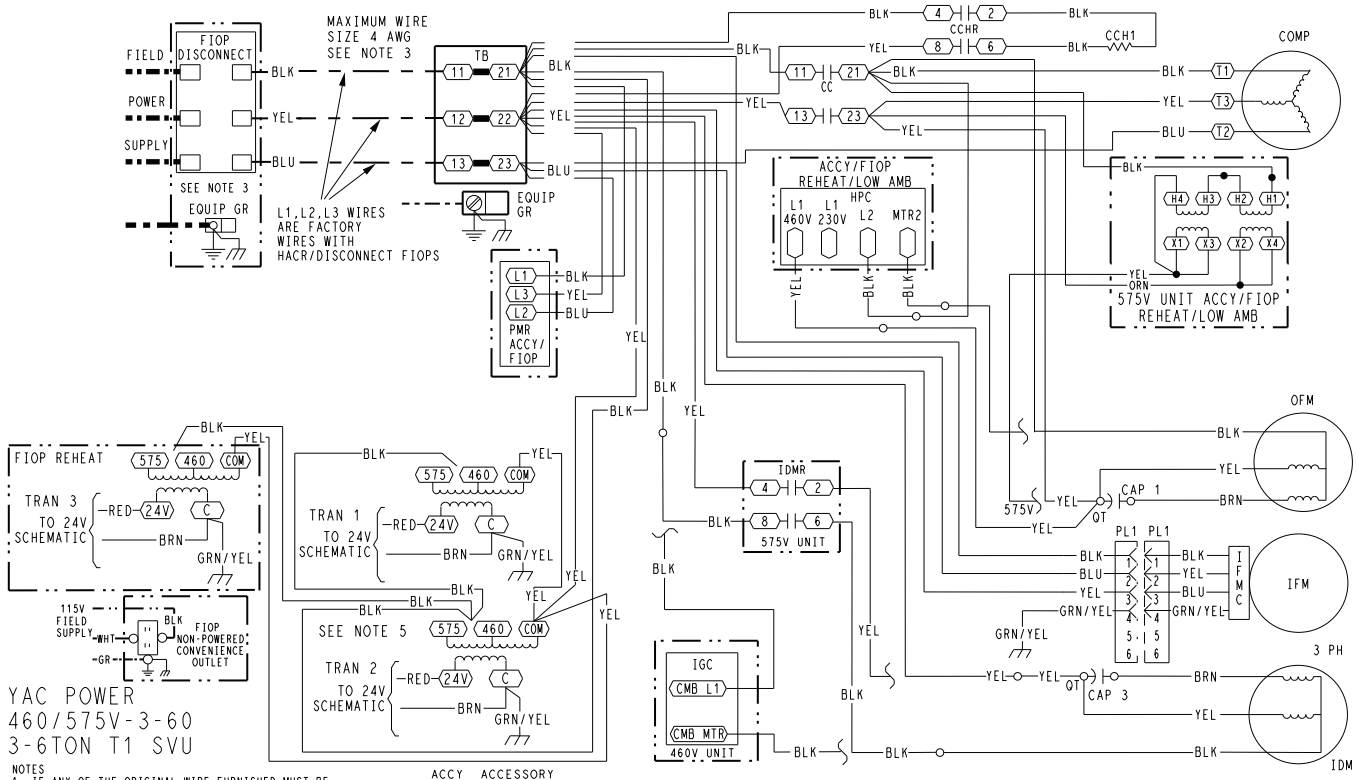

NOTES
1. IF ANY OF THE ORIGINAL WIRE FURNISHED MUST BE REPLACED, IT MUST BE REPLACED WITH TYPE 90° C WIRE OR ITS EQUIVALENT.
2. COMPRESSOR AND FAN MOTORS ARE THERMALLY PROTECTED.
3. USE COPPER CONDUCTOR ONLY.
4. DO NOT DISCONNECT POWER PLUG OR SIGNAL WIRE WHILE UNDER LOAD.
5. TRANSFORMER IS DEDICATED BASED ON UNIT VOLTAGE. TAPS ONLY SHOWN TO SIMPLIFY SCHEMATIC.

LEGEND

- MARKED WIRE
- TERMINAL (MARKED)
- TERMINAL (UNMARKED)
- TERMINAL BLOCK
- SPLICE
- SPLICE (MARKED)
- FACTORY WIRING
- FIELD CONTROL WIRING
- FIELD POWER WIRING
- CIRCUIT BOARD TRACE
- ACCESSORY OR OPTIONAL WIRING

ACCY	ACCESSORY
AUX	AUXILIARY
AWG	AMERICAN WIRE GAGE
BA	BUILDING AUTOMATION NETWORK
CC	CONTACTOR,COMPRESSOR
C	COMMON
CAP	CAPACITOR
CB	CIRCUIT BREAKER
CCH	CRANKCASE HEATER
CCHR	CRANKCASE HEATER RELAY
CCHTS	CRANKCASE HEATER TEMP SWITCH
CLO	COMPRESSOR LOCKOUT
CLV	COOLING LIQUID VALVE
CMB	CENTRIFUGAL MOTOR BLOWER
COFS	CONDENSATE OVERFLOW SWITCH
COM	SIGNAL COMMON
COMP	COMPRESSOR MOTOR
DDC	DIRECT DIGITAL CONTROL
DFB	DEFROST BOARD
DFT	DEFROST THERMOSTAT
EHR	ELECTRIC HEAT RELAY
ENTH	ENTHALPY
EQUIP	EQUIPMENT
ERV	ENERGY RECOVERY VENTILATOR
ESL	ENTHALPY SENSOR - LOW
FB	FUSE BLOCK
FIOP	FACTORY INSTALLED OPTION
FPT	FREEZE PROTECTION THERMOSTAT
FS	FLAME SWITCH
FST	FAN HOUSING TEMP SENSOR
FU	FUSE
G	THERMOSTAT FAN CALL
GR(GND)	GROUND
GV	GAS VALVE
HACR	HEATING, AIR-CONDITIONING, REFRIGERATION BREAKER
HGRH	HOT GAS REHEAT

HGRH	HOT GAS REHEAT
HPC	HEAD PRESSURE CONTROL
HPS	HIGH PRESSURE SWITCH
HR	HEATER RELAY
HUM	HUMIDISTAT
I	IGNITOR
IAQ	INDOOR AIR QUALITY SENSORS
IDM	INDUCED DRAFT MOTOR
IDMR	INDUCED DRAFT RELAY
IFM	INDOOR FAN MOTOR
IFMC	INDOOR FAN MOTOR CONTROL
IFO	INDOOR FAN ON SIGNAL
IGC	INTEGRATED GAS CONTROL
I	IGNITOR
IRH	INDOOR RELATIVE HUMIDITY
JMP	JUMPER
L1	LINE 1
LA	LOW AMBIENT LOCKOUT
LAR	LOW AMBIENT RELAY
LAS	LOW AMBIENT SWITCH
LDR	COMPRESSOR LOADER
LEN	LOCAL EQUIPMENT NETWORK
LOC	LOSS OF CHARGE
LOOP PWR	CURRENT LOOP POWER
LPS	LOW PRESSURE SWITCH
LS	LIMIT SWITCH
LSM	LIMIT SWITCH (MANUAL RESET)
LTLO	LOW TEMP LOCKOUT
MBB	MAIN BASE BOARD
MOV	METAL OXIDE VARISTOR
MTR	MOTOR
OAQ	OUTDOOR AIR QUALITY
OAT	OUTDOOR AIR TEMP. SEN
OFM	OUTDOOR FAN MOTOR
OFR	OUTDOOR FAN RELAY
OL	OVERLOAD

PER	POWER EXHAUST RELAY
PH	PHASE
PL	PLUG ASSEMBLY
POT	POTENTIOMETER
PMR	PHASE MONITOR RELAY
PS	PRESSURE SWITCH
PWM	PULSE WIDTH MODULATION
QT	QUADRUPLE TERMINAL
R	THERMOSTAT POWER
RAT	RETURN AIR TEMP. SENSOR
RDB	REFRIGERANT DISSIPATION BOARD
RDS	REFRIGERANT DISSIPATION SENSOR
RDV	REHEAT DISCHARGE VALVE
RH	RELATIVE HUMIDITY
RLV	REHEAT LIQUID VALVE
RNET	LOCAL ACCESS NETWORK
RS	ROLLOUT SWITCH
RVS	REVERSING VALVE SOLENOID
SAT	SUPPLY AIR TEMP SENSOR
SDP	SYSTEM DISCHARGE PRESSURE
SPRH	SPACE RELATIVE HUMIDITY
SPT	SPACE TEMPERATURE SENSOR
SPTO	SPACE TEMPERATURE OFFSET
SSP	SYSTEM SUCTION PRESSURE
STD	STANDARD
SW	SWITCH
TB	TERMINAL BLOCK
TDR	TIME DELAY RELAY
TRAN	TRANSFORMER
UCB	UNIT CONTROL BOARD
W1	1st STAGE OF HEATING CALL
W2	2nd STAGE OF HEATING CALL
Y1	1st STAGE OF COOLING CALL
Y2	2nd STAGE OF COOLING CALL

48TC003008 | G

Typical Power Wiring Diagram for SystemVu™ Controller Units, 48FE 04-06 Ultra Low NOx, 460-3-60 Units Shown

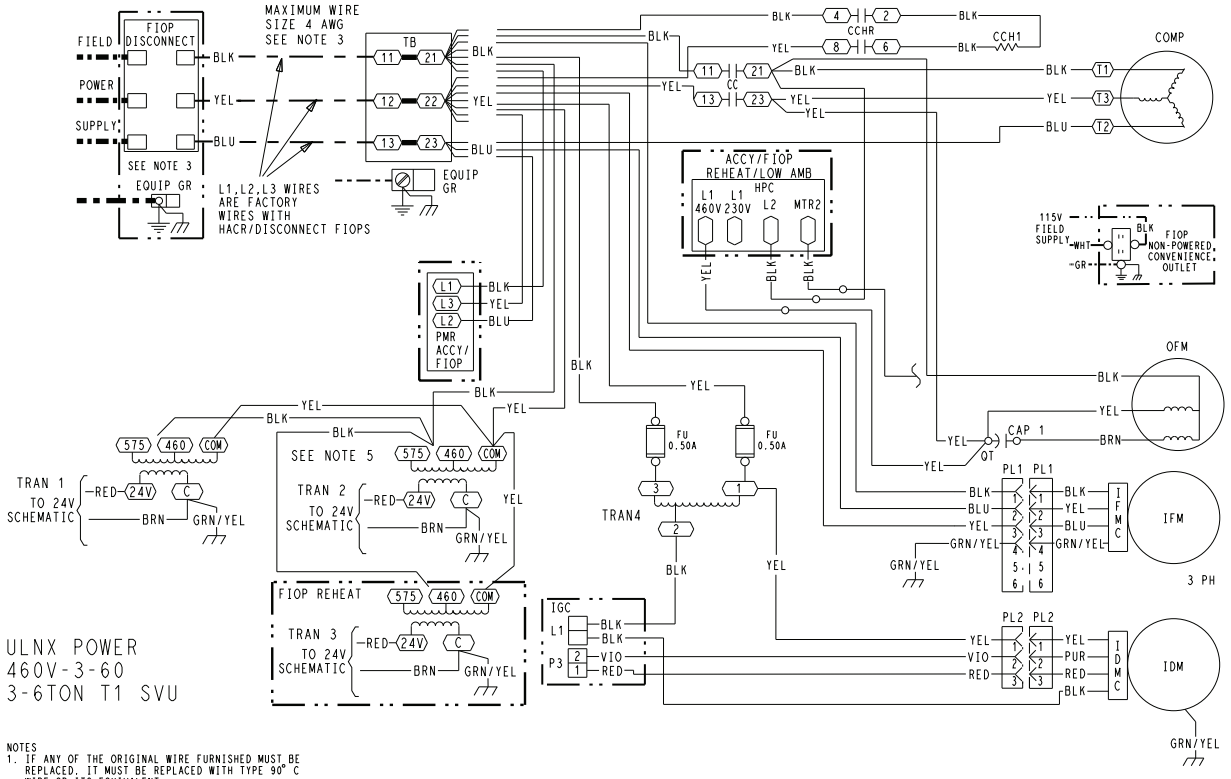

NOTES
1. IF ANY OF THE ORIGINAL WIRE FURNISHED MUST BE REPLACED, IT MUST BE REPLACED WITH TYPE 90° C WIRE OR ITS EQUIVALENT.
2. COMPRESSOR AND FAN MOTORS ARE THERMALLY PROTECTED.
3. USE COPPER CONDUCTOR ONLY.
4. DO NOT DISCONNECT POWER PLUG OR SIGNAL WIRE WHILE UNDER LOAD.
5. TRANSFORMER IS DEDICATED BASED ON UNIT VOLTAGE. TAPS ONLY SHOWN TO SIMPLIFY SCHEMATIC.

LEGEND

- MARKED WIRE
- TERMINAL (MARKED)
- TERMINAL (UNMARKED)
- TERMINAL BLOCK
- SPLICE
- SPLICE (MARKED)
- FACTORY WIRING
- FIELD CONTROL WIRING
- FIELD POWER WIRING
- CIRCUIT BOARD TRACE
- ACCESSORY OR OPTIONAL WIRING

ACCY	ACCESSORY
AUX	AUXILIARY
AWG	AMERICAN WIRE GAUGE
BA	BUILDING AUTOMATION NETWORK
CC	CONTACTOR,COMPRESSOR
C	COMMON
CAP	CAPACITOR
CB	CIRCUIT BREAKER
CCH	CRANKCASE HEATER
CCHR	CRANKCASE HEATER RELAY
CCHTS	CRANKCASE HEATER TEMP SWITCH
CLO	COMPRESSOR LOCKOUT
CLV	COOLING LIQUID VALVE
CMB	CENTRIFUGAL MOTOR BLOWER
COFS	CONDENSATE OVERFLOW SWITCH
COM	SIGNAL COMMON
COMP	COMPRESSOR MOTOR
DDC	DIRECT DIGITAL CONTROL
DFB	DEFROST BOARD
DFT	DEFROST THERMOSTAT
EHR	ELECTRIC HEAT RELAY
ENTH	ENTHALPY
EQUIP	EQUIPMENT
ERV	ENERGY RECOVERY VENTILATOR
ESL	ENTHALPY SENSOR - LOW
FB	FUSE BLOCK
FIOP	FACTORY INSTALLED OPTION
FPT	FREEZE PROTECTION THERMOSTAT
FS	FLAME SWITCH
FST	FAN HOUSING TEMP SENSOR
FU	FUSE
G	THERMOSTAT FAN CALL
GR(GND)	GROUND
GV	GAS VALVE
HACR	HEATING, AIR-CONDITIONING, REFRIGERATION BREAKER
HGRH	HOT GAS REHEAT
HGRH	HOT GAS REHEAT
HPC	HEAD PRESSURE CONTROL
HPS	HIGH PRESSURE SWITCH
HR	HEATER RELAY
HUM	HUMIDISTAT
I	IGNITOR
IAQ	INDOOR AIR QUALITY SENSORS
IDM	INDUCED DRAFT MOTOR
IDMC	INDUCER DRAFT MOTOR CONTROLLER
IDMR	INDUCED DRAFT RELAY
IFM	INDOOR FAN MOTOR
IFMC	INDOOR FAN MOTOR CONTROL
IFO	INDOOR FAN ON SIGNAL
IGC	INTEGRATED GAS CONTROL
I	IGNITOR
IRH	INDOOR RELATIVE HUMIDITY
JMP	JUMPER
L1	LINE 1
LA	LOW AMBIENT LOCKOUT
LAR	LOW AMBIENT RELAY
LAS	LOW AMBIENT SWITCH
LDR	COMPRESSOR LOADER
LEN	LOCAL EQUIPMENT NETWORK
LOC	LOSS OF CHARGE
LOOP PWR	CURRENT LOOP POWER
LPS	LOW PRESSURE SWITCH
LS	LIMIT SWITCH
LSM	LIMIT SWITCH (MANUAL RESET)
LTLO	LOW TEMP LOCKOUT
MBB	MAIN BASE BOARD
MOV	METAL OXIDE VARISTOR
MTR	MOTOR
OAQ	OUTDOOR AIR QUALITY
OAT	OUTDOOR AIR TEMP. SEN
OFM	OUTDOOR FAN MOTOR
OFR	OUTDOOR FAN RELAY
OL	OVERLOAD
PER	POWER EXHAUST RELAY
PH	PHASE
PL	PLUG ASSEMBLY
POT	POTENTIOMETER
PMR	PHASE MONITOR RELAY
PS	PRESSURE SWITCH
PWM	PULSE WIDTH MODULATION
QT	QUADRUPLE TERMINAL
R	THERMOSTAT POWER
RAT	RETURN AIR TEMP. SEN
RDV	REHEAT DISCHARGE VALVE
RH	RELATIVE HUMIDITY
RLV	REHEAT LIQUID VALVE
RNET	LOCAL ACCESS NETWORK
RS	ROLLOUT SWITCH
RVS	REVERSING VALVE SOLENOID
SAT	SUPPLY AIR TEMP SENSOR
SDP	SYSTEM DISCHARGE PRESSURE
SPRH	SPACE RELATIVE HUMIDITY
SPT	SPACE TEMPERATURE SENSOR
SPTO	SPACE TEMPERATURE OFFSET
SSP	SYSTEM SUCTION PRESSURE
STD	STANDARD
SW	SWITCH
TB	TERMINAL BLOCK
TDR	TIME DELAY RELAY
TRAN	TRANSFORMER
UCB	UNIT CONTROL BOARD
W1	1st STAGE OF HEATING CALL
W2	2nd STAGE OF HEATING CALL
Y1	1st STAGE OF COOLING CALL
Y2	2nd STAGE OF COOLING CALL

48TC004293 | G

Typical Control Wiring Diagram — Electromechanical with POL224 — 50FE 04-06 Units Shown

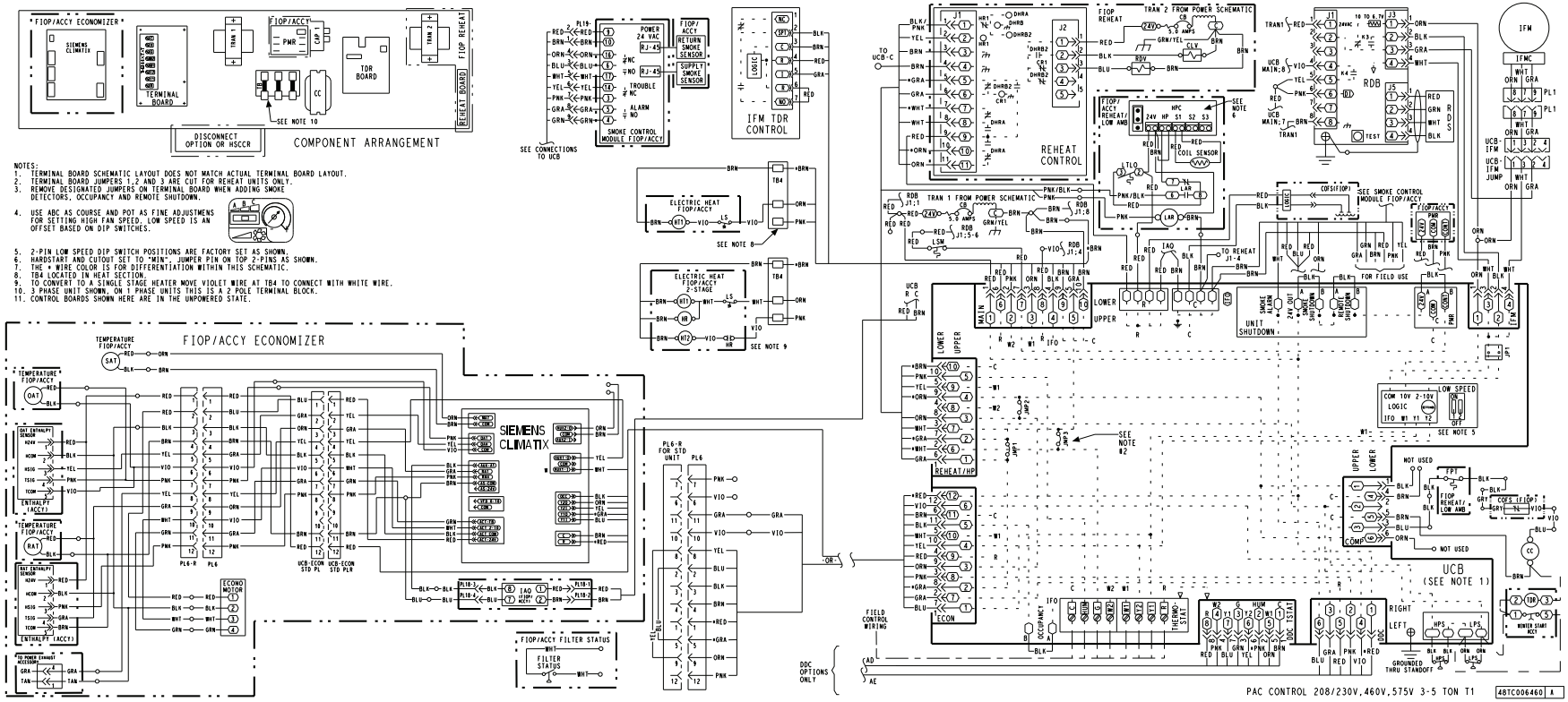

Typical Control Wiring Diagram — Electromechanical with POL224 — 50FE 07 Units Shown

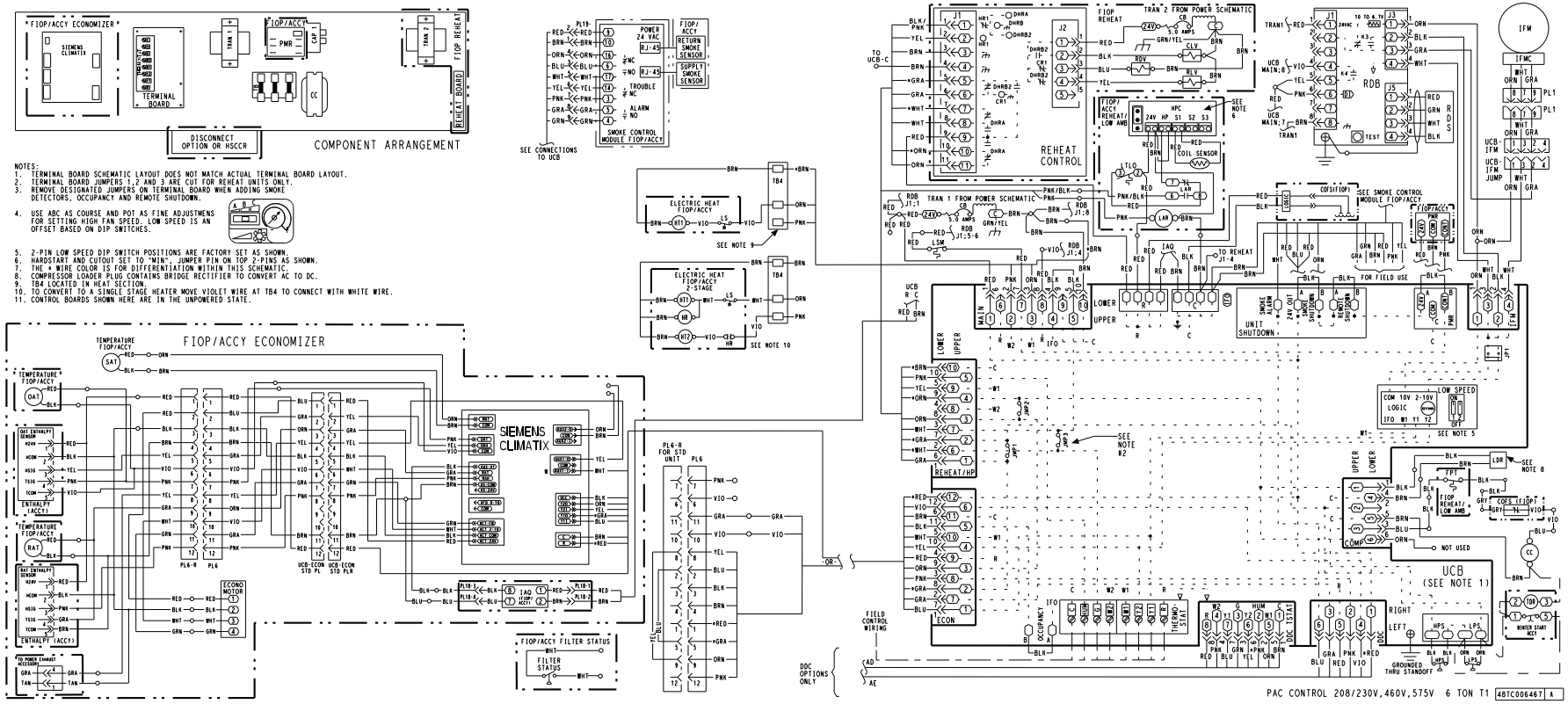

Typical Control Wiring Diagram— SystemVu™ Controller —50FE 04-06 Unit Shown

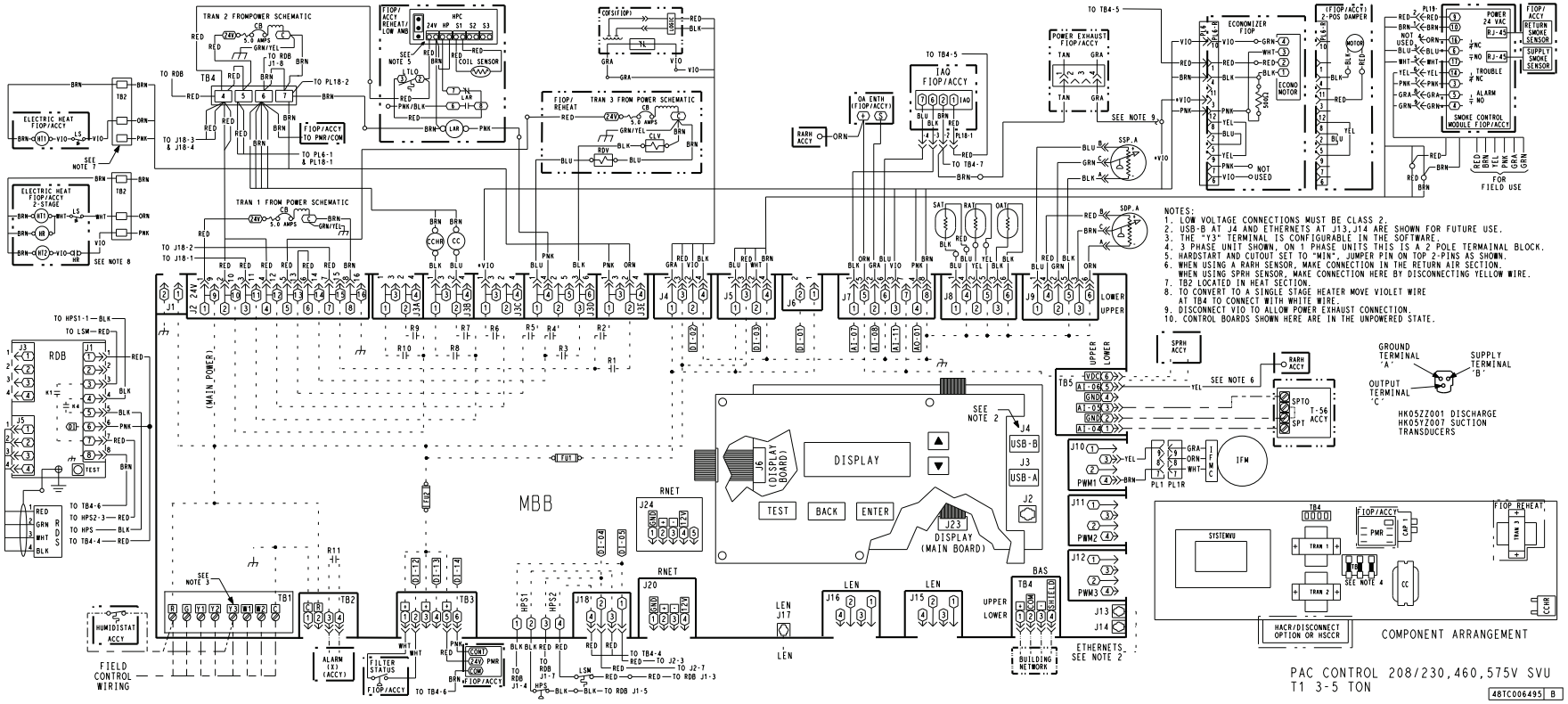

Typical Control Wiring Diagram— SystemVu™ Controller —50FE 07 Unit Shown

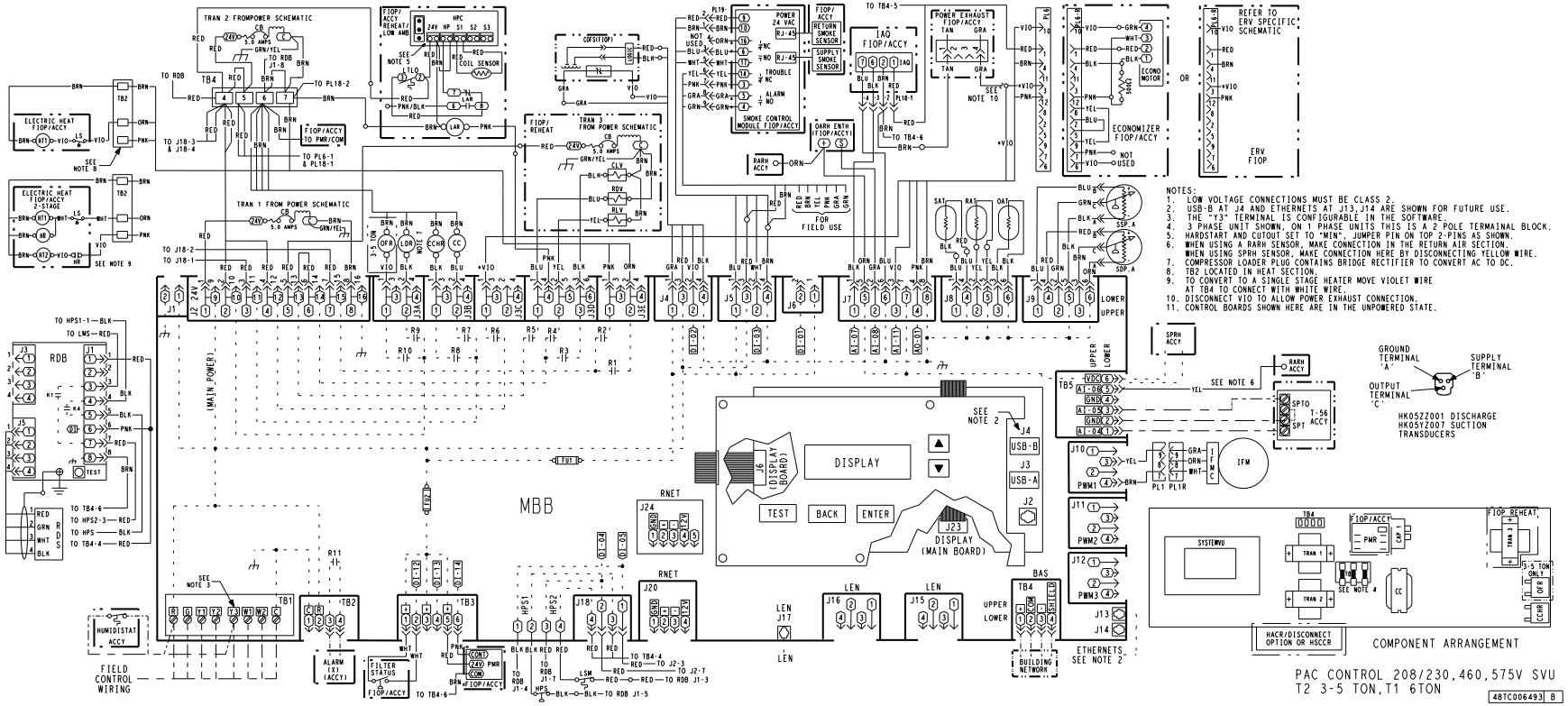

Typical 50FE 04-07 Power Wiring Diagram, 460/575-v Unit Shown

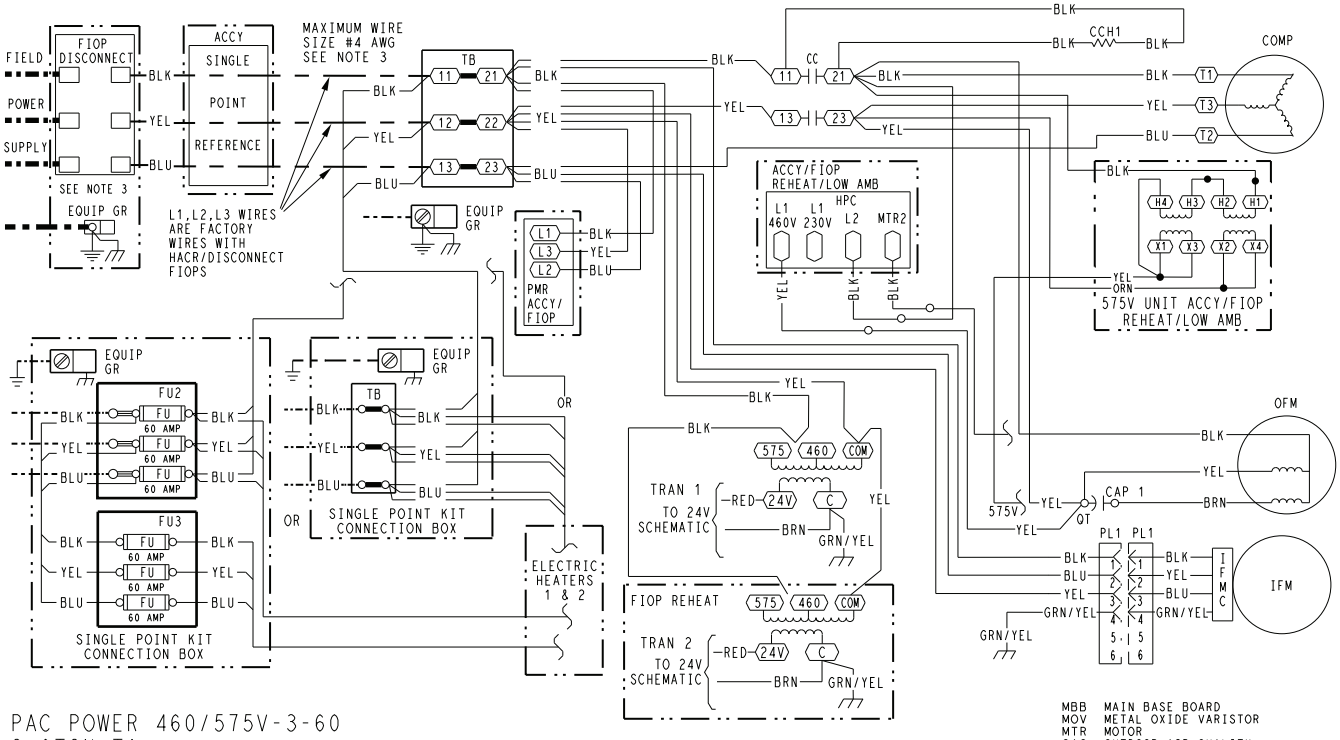

PAC POWER 460/575V-3-60
3-6TON T1

NOTES
1. IF ANY OF THE ORIGINAL WIRE FURNISHED MUST BE REPLACED. IT MUST BE REPLACED WITH TYPE 90° C WIRE OR ITS EQUIVALENT.
2. COMPRESSOR AND FAN MOTORS ARE THERMALLY PROTECTED.
3. USE COPPER CONDUCTOR ONLY.
4. DO NOT DISCONNECT POWER PLUG OR SIGNAL WIRE WHILE UNDER LOAD.
5. TRANSFORMER IS DEDICATED BASED ON UNIT VOLTAGE. TAPS ONLY SHOWN TO SIMPLIFY SCHEMATIC.

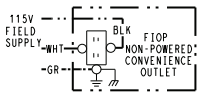

LEGEND

- (X) MARKED WIRE
- (X) TERMINAL (MARKED)
- ○ TERMINAL (UNMARKED)
- [X] TERMINAL BLOCK
- ● SPLICE
- (●) SPLICE (MARKED)
- FACTORY WIRING
- FIELD CONTROL WIRING
- FIELD POWER WIRING
- CIRCUIT BOARD TRACE
- ACCESSORY OR OPTIONAL WIRING

ACCY	ACCESSORY
AWG	AMERICAN WIRE GAGE
BAS	BUILDING AUTOMATION NETWORK
CC	CONTACTOR,COMPRESSOR
C	COMMON
CAP	CAPACITOR
CB	CIRCUIT BREAKER
CCH	CRANKCASE HEATER
CCHR	CRANKCASE HEATER RELAY
CCHTS	CRANKCASE HEATER TEMP SWITCH
CLO	COMPRESSOR LOCKOUT
CLV	COOLING LIQUID VALVE
COFS	CONDENSATE OVERFLOW SWITCH
COM	SIGNAL COMMON
COMP	COMPRESSOR MOTOR
DDC	DIRECT DIGITAL CONTROL
DFB	DEFROST BOARD
DFT	DEFROST THERMOSTAT
EHR	ELECTRIC HEAT RELAY
ENTH	ENTHALPY
ERV	ENERGY RECOVERY VENTILATOR
ESL	ENTHALPY SENSOR - LOW
FB	FUSE BLOCK
FIOP	FACTORY INSTALLED OPTION
FPT	FREEZE PROTECTION THERMOSTAT
FST	FAN HOUSING TEMP SENSOR
FU	FUSE
G	THERMOSTAT FAN CALL
GR(GND)	GROUND
HACR	HEATING, AIR-CONDITIONING, REFRIGERATION BREAKER
HR	HEATER RELAY
HGRH	HOT GAS REHEAT
HPC	HEAD PRESSURE CONTROL
HPS	HIGH PRESSURE SWITCH
HUM	HUMIDISTAT
IAQ	INDOOR AIR QUALITY SENSORS
IFM	INDOOR FAN MOTOR
IFMC	INDOOR FAN MOTOR CONTROL
IFO	INDOOR FAN ON SIGNAL
IRH	INDOOR RELATIVE HUMIDITY
JMP	JUMPER
L1	LINE 1
LA	LOW AMBIENT LOCKOUT
LAR	LOW AMBIENT RELAY
LAS	LOW AMBIENT SWITCH
LDR	COMPRESSOR LOADER
LEN	LOCAL EQUIPMENT NETWORK
LOC	LOSS OF CHARGE
LOOP PWR	CURRENT LOOP POWER
LPS	LOW PRESSURE SWITCH
LS	LIMIT SWITCH
LSM	LIMIT SWITCH (MANUAL RESET)
LTLO	LOW TEMP LOCKOUT
MBB	MAIN BASE BOARD
MOV	METAL OXIDE VARISTOR
MTR	MOTOR
OAQ	OUTDOOR AIR QUALITY
OAT	OUTDOOR AIR TEMP. SEN
OFM	OUTDOOR FAN MOTOR
OFR	OUTDOOR FAN RELAY
OL	OVERLOAD
PER	POWER EXHAUST RELAY
PH	PHASE
PL	PLUG ASSEMBLY
POT	POTENTIOMETER
PMR	PHASE MONITOR RELAY
PS	PRESSURE SWITCH
PWM	PULSE WIDTH MODULATION
QT	QUADRUPLE TERMINAL
R	THERMOSTAT POWER
RAT	RETURN AIR TEMP. SEN
RDB	REFRIGERANT DISSIPATION BOARD
RDS	REFRIGERANT DISSIPATION SENSOR
RDV	REHEAT DISCHARGE VALVE
RH	RELATIVE HUMIDITY
RLV	REHEAT LIQUID VALVE
RNET	LOCAL ACCESS NETWORK
RVS	REVERSING VALVE SOLENOID
SAT	SUPPLY AIR TEMP SENSOR
SDP	SYSTEM DISCHARGE PRESSURE
SPRH	SPACE RELATIVE HUMIDITY
SPT	SPACE TEMPERATURE SENSOR
SPTO	SPACE TEMPERATURE OFFSET
SSP	SYSTEM SUCTION PRESSURE
SW	SWITCH
TB	TERMINAL BLOCK
TDR	TIME DELAY RELAY
TRAN	TRANSFORMER
UCB	UNIT CONTROL BOARD
W1	1st STAGE OF HEATING CALL
W2	2nd STAGE OF HEATING CALL
Y1	1st STAGE OF COOLING CALL
Y2	2nd STAGE OF COOLING CALL

48TC002995 | G

Typical Power Wiring Diagram for SystemVu™ Controller Units, 50FE 04-07, 460/575-3-60 Units Shown

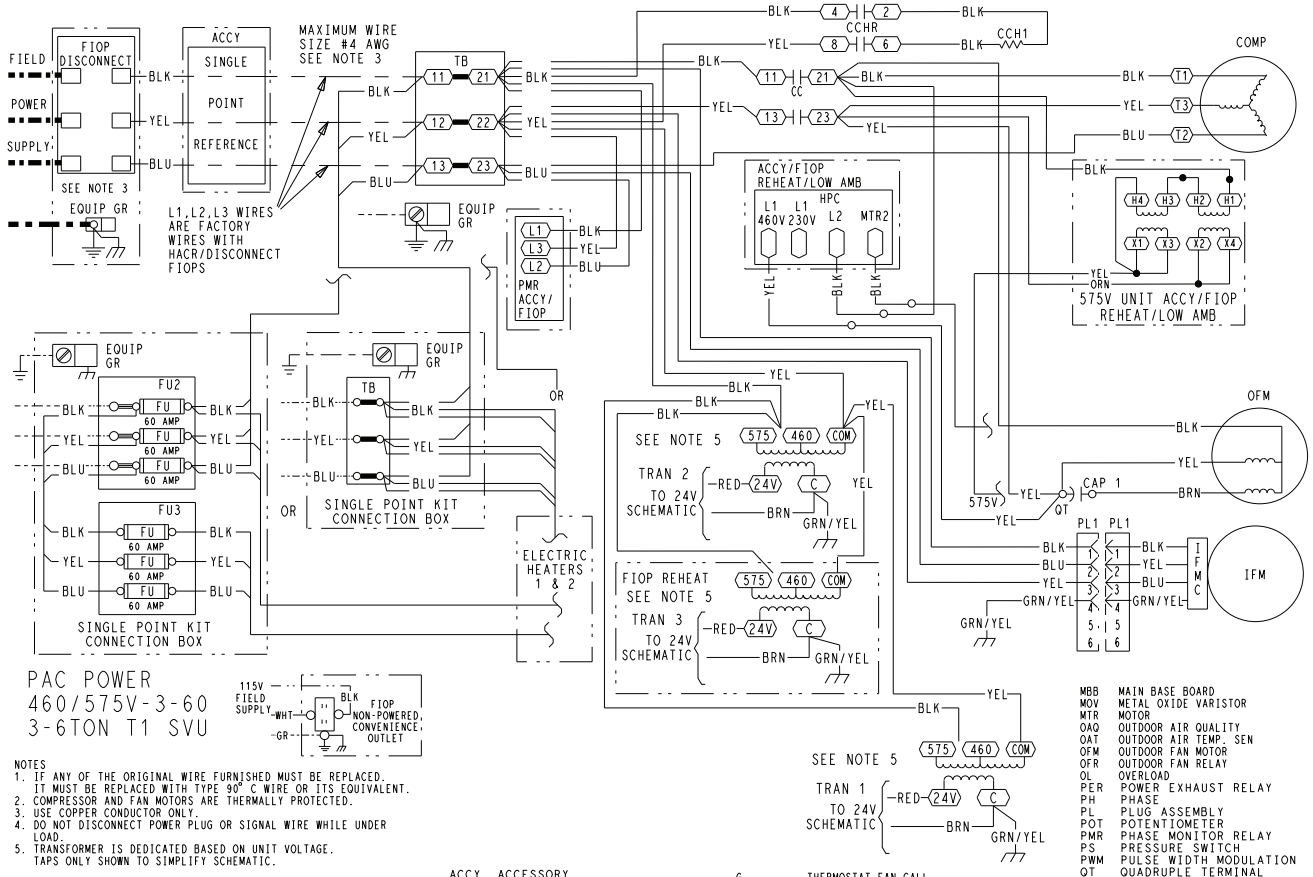

NOTES
1. IF ANY OF THE ORIGINAL WIRE FURNISHED MUST BE REPLACED. IT MUST BE REPLACED WITH TYPE 90° C WIRE OR ITS EQUIVALENT.
2. COMPRESSOR AND FAN MOTORS ARE THERMALLY PROTECTED.
3. USE COPPER CONDUCTOR ONLY.
4. DO NOT DISCONNECT POWER PLUG OR SIGNAL WIRE WHILE UNDER LOAD.
5. TRANSFORMER IS DEDICATED BASED ON UNIT VOLTAGE. TAPS ONLY SHOWN TO SIMPLIFY SCHEMATIC.

LEGEND

- MARKED WIRE
- TERMINAL (MARKED)
- TERMINAL (UNMARKED)
- TERMINAL BLOCK
- SPLICE
- SPLICE (MARKED)
- FACTORY WIRING
- FIELD CONTROL WIRING
- FIELD POWER WIRING
- CIRCUIT BOARD TRACE
- ACCESSORY OR OPTIONAL WIRING

ACCY	ACCESSORY
AWG	AMERICAN WIRE GAGE
BAS	BUILDING AUTOMATION NETWORK
CC	CONTACTOR,COMPRESSOR
C	COMMON
CAP	CAPACITOR
CB	CIRCUIT BREAKER
CCH	CRANKCASE HEATER
CCHR	CRANKCASE HEATER RELAY
CCHTS	CRANKCASE HEATER TEMP SWITCH
CLO	COMPRESSOR LOCKOUT
CLV	COOLING LIQUID VALVE
COFS	CONDENSATE OVERFLOW SWITCH
COM	SIGNAL COMMON
COMP	COMPRESSOR MOTOR
DDC	DIRECT DIGITAL CONTROL
DFB	DEFROST BOARD
DFT	DEFROST THERMOSTAT
EHR	ELECTRIC HEAT RELAY
ENTH	ENTHALPY
ERV	ENERGY RECOVERY VENTILATOR
ESL	ENTHALPY SENSOR - LOW
FB	FUSE BLOCK
FIOP	FACTORY INSTALLED OPTION
FPT	FREEZE PROTECTION THERMOSTAT
FST	FAN HOUSING TEMP SENSOR
FU	FUSE
G	THERMOSTAT FAN CALL
GR(GND)	GROUND
HACR	HEATING, AIR-CONDITIONING, REFRIGERATION BREAKER
HR	HEATER RELAY
HGRH	HOT GAS REHEAT
HPC	HEAD PRESSURE CONTROL
HPS	HIGH PRESSURE SWITCH
HUM	HUMIDISTAT
IAQ	INDOOR AIR QUALITY SENSORS
IFM	INDOOR FAN MOTOR
IFMC	INDOOR FAN MOTOR CONTROL
IFO	INDOOR FAN ON SIGNAL
IRH	INDOOR RELATIVE HUMIDITY
JMP	JUMPER
L1	LINE 1
LA	LOW AMBIENT LOCKOUT
LAR	LOW AMBIENT RELAY
LAS	LOW AMBIENT SWITCH
LDR	COMPRESSOR LOADER
LEN	LOCAL EQUIPMENT NETWORK
LOC	LOSS OF CHARGE
LOOP PWR	CURRENT LOOP POWER
LPS	LOW PRESSURE SWITCH
LS	LIMIT SWITCH
LSM	LIMIT SWITCH (MANUAL RESET)
LTLO	LOW TEMP LOCKOUT
MBB	MAIN BASE BOARD
MOV	METAL OXIDE VARISTOR
MTR	MOTOR
OAQ	OUTDOOR AIR QUALITY
OAT	OUTDOOR AIR TEMP. SEN
OFM	OUTDOOR FAN MOTOR
OFR	OUTDOOR FAN RELAY
OL	OVERLOAD
PER	POWER EXHAUST RELAY
PH	PHASE
PL	PLUG ASSEMBLY
POT	POTENTIOMETER
PMR	PHASE MONITOR RELAY
PS	PRESSURE SWITCH
PWM	PULSE WIDTH MODULATION
QT	QUADRUPLE TERMINAL
R	THERMOSTAT POWER
RAT	RETURN AIR TEMP. SEN
RDB	REFRIGERANT DISSIPATION BOARD
RDS	REFRIGERANT DISSIPATION SENSOR
RDV	REHEAT DISCHARGE VALVE
RH	RELATIVE HUMIDITY
RLV	REHEAT LIQUID VALVE
RNET	LOCAL ACCESS NETWORK
RVS	REVERSING VALVE SOLENOID
SAT	SUPPLY AIR TEMP SENSOR
SDP	SYSTEM DISCHARGE PRESSURE
SPRH	SPACE RELATIVE HUMIDITY
SPT	SPACE TEMPERATURE SENSOR
SPTO	SPACE TEMPERATURE OFFSET
SSP	SYSTEM SUCTION PRESSURE
SW	SWITCH
TB	TERMINAL BLOCK
TDR	TIME DELAY RELAY
TRAN	TRANSFORMER
UCB	UNIT CONTROL BOARD
W1	1st STAGE OF HEATING CALL
W2	2nd STAGE OF HEATING CALL
Y1	1st STAGE OF COOLING CALL
Y2	2nd STAGE OF COOLING CALL

48TC003011 | H

Sequence of operation

General

The sequence below describes the sequence of operation for an electromechanical unit with and without a factory-installed EconomizerONE (POL224 controller). For information regarding a direct digital controller, see the start-up, operations, and troubleshooting manual for the applicable controller.

Dissipation

When the factory-installed dissipation system detects a level of refrigerant leak in the unit, a safety dissipation mode will be activated. During this dissipation mode, the thermostat will be disabled and the indoor fan will run at 66% of the maximum speed of the motor. When the refrigerant leak levels are normal for 5 minutes, the unit will return to normal operation.

Electromechanical units without economizer

Cooling (single stage units)

When the thermostat calls for cooling, terminals G and Y1 are energized. The indoor fan will run at the user-set fan speed and the compressor contactor (CC) is energized, causing the compressor and outdoor fan to run.

When the thermostat removes the call for Y1, the compressor contactor will de-energize, shutting down the compressor and the outdoor fan. When the thermostat removes the call for G, the indoor fan will turn off after the specific unit fan off delay.

Cooling (2-stage units)

When the thermostat calls for cooling, terminals G and Y1 are energized. The indoor fan will run at the low fan speed and the compressor contactor (CC) is energized, causing the compressor and outdoor fan to run. The low indoor fan speed is 66% of the user-set fan speed, and the compressor will run at partial capacity.

If additional cooling is needed, then the thermostat will add the call for Y2. This will increase the indoor fan speed to the user-set fan speed and energize the compressor loader for full compressor capacity. The outdoor fan is the same speed for Y1 and Y2.

When the thermostat removes the call for Y2 but leaves the Y1, the indoor fan will reduce speed to 66% of the user-set fan speed, the compressor loader will turn off, and the outdoor fan will remain on. When the thermostat removes the call for Y1, the compressor contactor will de-energize, shutting down the compressor and the outdoor fan. When the thermostat removes the call for G, the indoor fan will turn off after the specific unit fan off delay.

NOTE: Per ASHRAE 90.1-2016 and IECC-2018 standards, during the first stage of cooling operation, the Unit Control Board (UCB) will adjust the fan motor speed to provide 66% of the total cfm established for the unit.

Gas heating (48FE units)

NOTE: WeatherMaker® units have either 1 or 2 stages of gas heat.

When the thermostat calls for heating, power is sent to W on the Integrated Gas Controller (IGC) board. An LED (light-emitting diode) on the IGC board turns on and remains on during normal operation. A check is made to ensure that the roll-out switch and limit switch are closed. If the check was successful, then the induced draft motor is energized, and when its speed is satisfactory, as proven by the flue gas pressure switch, the ignition activation period begins. The burners will ignite within 5 seconds. If the burners do not light, then there is a 22-second delay before another 5-second attempt. This sequence is repeated for 15 minutes or until the burners light. If, after the 15 minutes, the burners still have not lit, heating is locked out. To reset the control, break 24-v power to the thermostat.

When ignition occurs, the IGC board will continue to monitor the condition of the roll-out switch, the limit switches, the flue gas pressure switch, and the flame sensor. Forty-five seconds after ignition occurs, assuming the unit is controlled through a room thermostat set for fan auto, the indoor-fan motor will energize (and the outdoor-air dampers will open to their minimum position). If, for some reason, the over-temperature limit opens prior to the start of the indoor fan blower, then the unit will shorten the 45 second delay to 5 seconds less than the time from initiation of heat to when the limit tripped. Gas will not be interrupted to the burners and heating will continue. Once the fan-on delay has been modified, it will not change back to 45 seconds until power is reset to the control. On units with 2 stages of heat, when additional heat is required, W2 closes and initiates power to the second stage of the main gas valve. When the thermostat is satisfied, W1 and W2 open and the gas valve closes, interrupting the flow of gas to the main burners. If the unit is controlled through a room thermostat set for fan auto, then the indoor fan motor will continue to operate for an additional 45 second and then stop. An LED indicator is provided on the IGC to monitor operation.

Electric heating (50FE units)

NOTE: 50FE units are sold as cooling only. If electric heaters are required, use only factory-approved heaters. They will operate as follows.

Units have either 1 or 2 stages of electric heat. When the thermostat calls for heating, power is applied to G and the W1 terminals at the unit. The unit control will energize the indoor fan contactor and the first stage of electric heat. On units with 2-stage heating, when additional heating is required, the second stage of electric heat (if equipped) will be energized when power is applied at the W2 terminal on the unit.

IMPORTANT: The thermostat must be configured for Electric Heat so it will energize G with the W1 call.

Electromechanical units with factory-installed EconomizerONE

When free cooling is not available, the compressors will be controlled by the zone thermostat. When free cooling is available, the outdoor-air damper is modulated by the EconomizerONE control to provide a 50°F (10°C) to 55°F (13°C) mixed-air temperature into the zone. As the mixed air temperature fluctuates above 55°F (13°C) or below 50°F (10°C), dampers will be modulated (open or close) to bring the mixed-air temperature back within control. If mechanical cooling is utilized with free cooling, then the outdoor-air damper will maintain its current position at the time the compressor is started. If the increase in cooling capacity causes the mixed-air temperature to drop below 45°F (7°C), then the outdoor-air damper position will be decreased to the minimum position. If the mixed-air temperature continues to fall, then the outdoor-air damper will

close. Control returns to normal once the mixed-air temperature rises above 48°F (9°C). The power exhaust fans will be energized and de-energized, if installed, as the outdoor-air damper opens and closes.

If field-installed accessory CO_2 sensors are connected to the EconomizerONE control, then a demand-controlled ventilation strategy will begin to operate. As the CO_2 level in the zone increases above the CO_2 setpoint (on the EconomizerONE controller), the minimum position of the damper will be increased proportionally until the Maximum Ventilation setting is reached. As the CO_2 level decreases because of the increase in fresh air, the outdoor-air damper will follow the higher demand condition from either the DCV mode or from the free cooling mode. For EconomizerONE operation, there must be a thermostat call for the fan (G). If the unit is occupied and the fan is on, then the damper will operate at minimum position. Otherwise, the damper will be closed.

When the EconomizerONE control is in the occupied mode and a call for cooling exists (Y1 on the thermostat), the control will first check for indoor fan operation. If the fan is not on, then cooling will not be activated. If the fan is on, then the control will open the EconomizerONE damper to the minimum position.

On the initial power to the EconomizerONE control, it will take the damper up to 2-1/2 minutes before it begins to position itself. After the initial power-up, further changes in damper position can take up to 90 seconds to initiate. Damper movement from fully closed to fully open (or vice versa) will take between 1-1/2 and 2-1/2 minutes. If free cooling can be used, as determined from the appropriate changeover command (dry bulb, outdoor enthalpy, differential dry bulb, or differential enthalpy), then the control will modulate the dampers open and closed to maintain the mixed-air temperature setpoint at 50°F (10°C) to 55°F (13°C). If there is a further demand for cooling (cooling second stage — Y2 is energized), then the control will bring on compressor stage 1 to maintain the mixed-air temperature setpoint. The EconomizerONE damper will be open at maximum position.

NOTE: For 2-speed units, the EconomizerONE controller will adjust the damper position as the Indoor Fan Speed changes, per its configured values.

Heating

The sequence of operation for heating is the same as for an electromechanical unit without an economizer. The only difference is how the economizer acts. The economizer will stay at the Economizer Minimum Position while the evaporator fan is operating. The outdoor-air damper is closed when the indoor fan is not operating. Refer to the unit's service and maintenance manual for further details.

Optional Humidi-MiZer® dehumidification system

Units with the factory-installed Humidi-MiZer system option are capable of providing multiple modes of improved dehumidification as a variation of the normal cooling cycle. The Humidi-MiZer system includes additional valves in the liquid line and discharge line of each refrigerant circuit, a small reheat condenser coil downstream of the evaporator, and variable-speed control of some or all outdoor fans. Operation of the revised refrigerant circuit for each mode is described below.

The Humidi-MiZer system provides 3 sub-modes of operation: Cool, Reheat1, and Reheat2.

Cool — provides a normal ratio of sensible and latent cooling effect from the evaporator coil.

Reheat1 — provides increased latent cooling while slightly reducing the sensible cooling effect.

Reheat2 — provides normal latent cooling but with null or minimum sensible cooling effect delivered to the space.

The Reheat1 and Reheat2 modes are available when the unit is not in a heating mode and when the low ambient lockout switch is closed.

Refer to the figures that follow for single stage and 2 stage piping flow diagrams.

SystemVu™ controller (factory option)

For details on operating 48/50FE units equipped with the factory-installed SystemVu controller option, refer to the *FE/GE Series Single Package Rooftop Units with SystemVu Controller Controls, Start-Up, Operation and Troubleshooting* manual.

Normal Cooling Mode — Humidi-MiZer® System with Single Stage Cooling

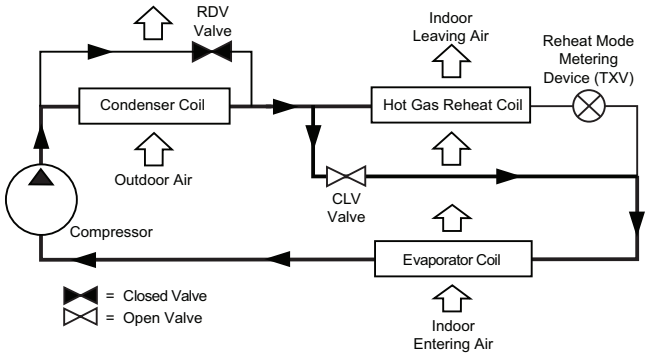

Normal Cooling Mode — Humidi-MiZer® System with 2-Stage Cooling

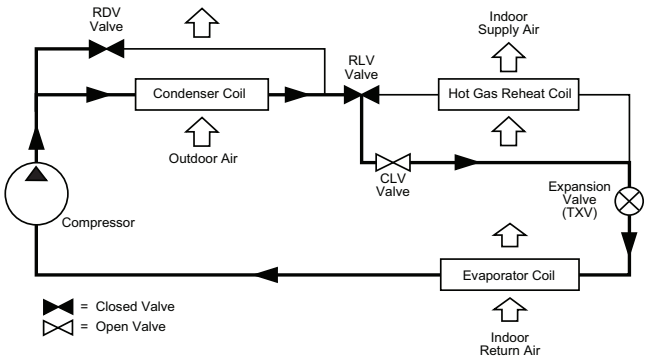

Subcooling Mode (Reheat1) — Humidi-MiZer System with Single Stage Cooling

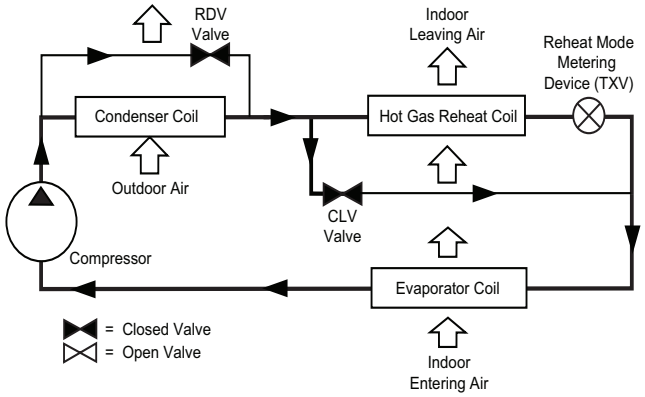

Subcooling Mode (Reheat1) — Humidi-MiZer System with 2-Stage Cooling

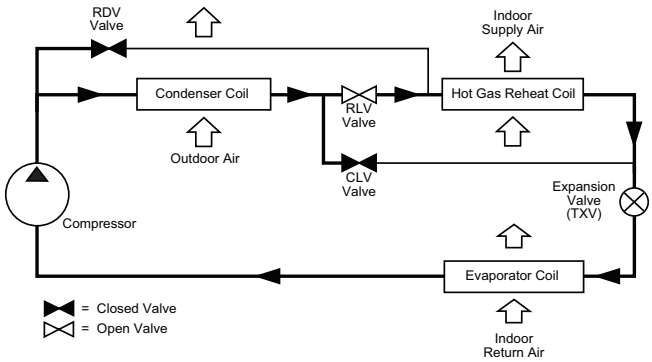

Hot Gas Reheat Mode (Reheat2) — Humidi-MiZer System with Single Stage Cooling

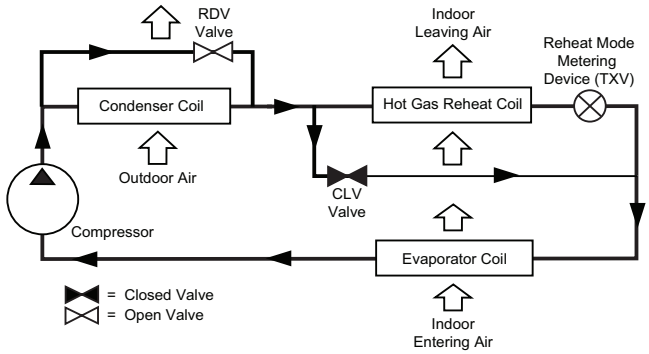

Hot Gas Reheat Mode (Reheat2) — Humidi-MiZer System with 2-Stage Cooling

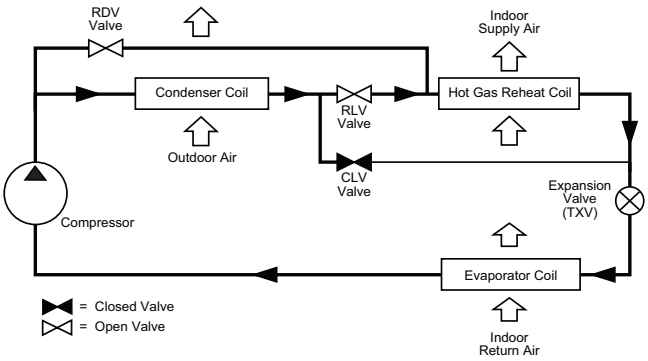

Minimum operating ambient temperature (cooling)

In mechanical cooling mode, your Carrier rooftop unit can safely operate down to an outdoor ambient temperature of 40°F (4°C). It is possible to provide cooling at lower outdoor ambient temperatures by using less outside air, economizers, and/or accessory low ambient kits.

Maximum operating ambient temperature (cooling)

The maximum operating ambient temperature for cooling mode is 115°F (46°C). While cooling operation above 115°F (46°C) may be possible, it could cause reduced performance, reduced reliability, or a protective action by the unit's internal safety devices.

Multiple motor and drive packages

Some applications need larger horsepower motors, some need more airflow, and some need both. Regardless of the case, your Carrier expert has a factory-installed combination to meet your application. A wide selection of motors are available, factory installed, to handle nearly any application.

Stainless steel heat exchanger (48FE units only)

For this option, the tubular heat exchanger is made out of a minimum 20 gauge type 409 stainless steel for applications where the mixed air to the heat exchanger is expected to drop below 45°F (7°C). Stainless steel may be specified on applications where the presence of airborne contaminants require its use (applications such as paper mills) or in area with very high outdoor humidity that may result in severe condensation in the heat exchanger during cooling operation.

Minimum mixed air temperature (heating) (48FE units only)

Using the factory settings, the minimum temperatures for mixed air (the combined temperature of the warm return air and the cold outdoor air) entering the dimpled gas heat exchangers are shown in the following table.

Minimum Temperature for Mixed Air Temperature

ALUMINIZED	STAINLESS STEEL
50°F (10°C) Continuous	40°F (4°C) Continuous
45°F (7°C) Intermittent	35°F (2°C) Intermittent

Operating at lower mixed-air temperatures may be possible, if a field-supplied outdoor-air thermostat initiates both heat stages when the temperature is less than the minimum temperatures listed above. Please contact your local Carrier representative for assistance.

Minimum and maximum airflow (heating and cooling)

To maintain safe and reliable operation of your rooftop, operate within the heating airflow limits during heating mode and cooling airflow limits during cooling mode. Operating above the maximum may cause blow-off, undesired airflow noise, or airflow-related problems with the rooftop unit. Operating below the minimum may cause problems with coil freeze-up and unsafe heating operation. Heating and cooling limitations differ when evaluating operating cfm. The minimum value is the HIGHER of the cooling and heating minimum cfm values published on page 9 and the maximum value is the LOWER of the cooling and heating minimum values published on page 10.

Heating-to-cooling changeover

Your unit will automatically change from heating to cooling mode when using a thermostat with an auto-changeover feature.

Airflow

All units are draw-though in cooling mode and blow-through in heating mode.

Outdoor air application strategies

Economizers reduce operating expenses and compressor run time by providing a free source of cooling and a means of ventilation to match changing needs. In fact, they should be considered for most applications. Also, consider the various economizer control methods and their benefits, as well as the sensors required to accomplish your application goals. Please contact your local Carrier representative for assistance.

Motor limits, brake horsepower (bhp)

Due to the internal design of Carrier units, the air path, and specially designed motors, the full horsepower (maximum continuous bhp) band, as listed in the Fan Performance tables, can be used with the utmost confidence. There is no need for extra safety factors, as Carrier motors are designed and rigorously tested to use the entire listed bhp range without either nuisance tripping or premature motor failure.

Propane heating (48FE units only)

Propane has different physical qualities than natural gas. As a result, propane requires a different fuel to air mixture. To optimize the fuel/air mixture for propane, Carrier sells different burner orifices in an easy-to-install accessory kit. To select the correct burner orifices or determine the heat capacity for a propane application, use either the selection software or the unit's service manual.

NOTE: Not available for 48FE Ultra Low NOx units.

High altitude heating

High altitudes have less oxygen, which affects the fuel/air mixture in heat exchangers. In order to maintain a proper fuel/air mixture, heat exchangers operating at altitudes above 2000 ft (610 m) require different orifices. To select the correct burner orifices or determine the heat capacity for a high altitude application, use either the selection software or the unit's service manual.

High altitudes have less oxygen, which means heat exchangers need less fuel. The new gas orifices in Carrier's field-installed kit make the necessary adjustment for high altitude applications. They restore the optimal fuel to air mixture and maintain healthy combustion at altitudes above 2000 ft (610 m).

NOTE: Typical natural gas heating value ranges from 975 to 1050 Btu/ft^3 at sea level nationally. The heating value goes down approximately 1.7% per every thousand feet of elevation. Standard factory orifices can typically be used up

to 2000 ft (610 m) elevation without any operational issues.

NOTE: Ultra Low NOx units can operate at altitudes of 0 to 2,000 feet standard. Operation above 2,000 feet is not allowed.

Sizing a rooftop

Bigger is not necessarily better — while an air conditioner needs to have enough capacity to meet the design loads, it does not need excess capacity. In fact, excess capacity typically results in very poor part load performance and humidity control.

Using higher design temperatures than ASHRAE recommends for your location and adding "safety factors" to the calculated load are both signs of oversizing. Oversizing an air conditioner leads to poor humidity control, reduced efficiency, higher utility bills, larger indoor temperature swings, excessive noise, and increased wear and tear on the air conditioner.

Rather than oversizing an air conditioner, engineers should "right-size" or even slightly "under-size" air conditioners. Correctly sizing an air conditioner controls humidity better, promotes efficiency, reduces utility bills, extends equipment life, and maintains even, comfortable temperatures. Please contact your local Carrier representative for assistance.

Low ambient applications

The optional Carrier economizer can adequately cool your space by bringing in fresh, cool outside air. In fact, when a unit is equipped with an economizer, an accessory low-ambient kit may not be necessary. In low ambient conditions, unless the outdoor air is excessively humid or contaminated, economizer-based "free cooling" is the preferred, less costly, and energy-conscious method. In low ambient applications where outside air might not be desired (such as contaminated or excessively humid outdoor environments), your Carrier rooftop can operate to ambient temperatures down to –20°F (–29°C) using the recommended accessory low ambient controller.

Note about this specification:
This specification is in the "Masterformat" as published by the Construction Specification Institute. Please feel free to copy this specification directly into your building spec.

Gas Heat/Electric Cooling Packaged Rooftop

HVAC Guide Specifications

Size Range: **3 to 6 Nominal Tons**

Carrier Model Number: **48FE*04-07**

Part 1 — (23 06 80) Schedules for Decentralized HVAC Equipment

1.01 (23 06 80.13) Decentralized Unitary HVAC Equipment Schedule

A. (23 06 80.13.A.) Rooftop Unit (RTU) Schedule:

Schedule is per the project specification requirements.

Part 2 — (23 07 16) HVAC Equipment Insulation

2.01 (23 07 16.13) Decentralized, Rooftop Units:

A. (23 07 16.13.A.) Evaporator Fan Compartment:

1. Interior cabinet surfaces shall be insulated with a minimum 1/2 in. thick, minimum 1-1/2 lb density, flexible fiberglass insulation bonded with a phenolic binder, neoprene coated on the air side.
2. Insulation and adhesive shall meet NFPA 90A requirements for flame spread and smoke generation.

B. (23 07 16.13.B.) Gas Heat Compartment:

1. Aluminum foil-faced fiberglass insulation shall be used.
2. Insulation and adhesive shall meet NFPA 90A requirements for flame spread and smoke generation.

Part 3 — (23 09 13) Instrumentation and Control Devices for HVAC

3.01 (23 09 13.23) Sensors and Transmitters

A. (23 09 13.23.A.) Thermostats:

1. Thermostat must:
   a. energize both "W" and "G" when calling for heat.
   b. have capability to energize 1 or 2 stages of cooling, and 2 different stages of heating.
   c. include capability for occupancy scheduling.

Part 4 — (23 09 23) Direct Digital Control System for HVAC

4.01 (23 09 23.13) Decentralized, Rooftop Units:

A. (23 09 23.13.A.) SystemVu™ intelligent integrated Direct Digital Control (DDC) shall provide:

1. Integrated unit operation for comfort cooling, heating ventilation as well as all monitoring, recording and reporting capabilities. Controller shall also provide diagnostics and alarms of abnormal unit operation through the controller. Controller shall have an intuitive user display and be able to be used in a standalone operation or via building automation system (BAS).
2. Quick Unit Status LEDs of: Run — meaning all systems are go, ALERT — that indicates there is currently a non-critical issue with the unit, like filters need to be replaced and FAULT — that indicates the unit has a critical issue and will possibly shut down.
3. Six large navigation keys for easy access. Navigation keys shall consist of: TEST, BACK, ENTER, and MENU along with UP and DOWN arrows.
4. Full back lit user display with 4 line by 30 character text capabilities. Display menu shall be designed to provide guided major menus and sub menus main menus provided below:
   a. Shutdown Unit
   b. Run Status
   c. Settings
   d. Alerts/Faults
   e. Service
   f. Inputs
   g. Outputs
   h. USB
5. The capability for standalone operation with conventional thermostat/sensor or use with building automation systems (BAS) of Carrier i-Vu®, BACnet™[1], and Carrier Comfort Network® (CCN) systems. No special modules or boards are required for these capabilities. Has the capability to work with Equipment Touch™ and System Touch™ devices and ZS Sensors.
6. The ability to read refrigerant pressures at display or via BAS network of; Discharge Pressure and Suction Pressure. The need for traditional refrigerant gauges is not required.
7. USB Data Port for flash drive interaction. This will allow the transfer of data for uploads, downloads, perform software upgrades, back-up and restore data and file transfer data such as component number of starts and run hours.

1. Third-party trademarks and logos are the property of their respective owners.

8. Reverse Rotation Protection of compressors if field 3-phase wiring is misapplied.
9. Provide Service Capabilities of:
   a. Auto run test
   b. Manual run test
   c. Component run hours and starts
   d. Commissioning reports
   e. Data logging
   f. Alarm history
10. Economizer control and diagnostics. Set up economizer operation, receive feedback from actuator. Also meets the most recent California Title 24, ASHRAE 90.1 and IECC®[1] Fault Detection and Diagnostic (FDD) requirements.
11. Unit cooling operation down to 40°F (4°C).
12. Controller shall have easy access connections around the controller perimeter area and consist of Mate-N-Lok®[1], terminal block and RJ style modular jack connections.
13. 365 day real time clock, 20 holiday schedules along with occupied and unoccupied scheduling.
14. Auto-recognition for easy installation and commissioning of devices like economizers, space sensors etc.
15. A 5°F (3°C) temperature difference between cooling and heating setpoints to meet the latest ASHRAE 90.1 Energy Standard.
16. Contain return air sensor, supply air sensor and outdoor air sensor to help monitor and provide data for the unit comfort operation, diagnostic and alarms.
17. Use of Carrier's field accessory Equipment Touch and System Touch devices.
18. Units with the factory-installed Humidi-MiZer® system option are capable of providing multiple modes of improved dehumidification as a variation of the normal cooling cycle.
19. Supply Air Tempering control operates the gas or electric heat to maintain a minimum supply air temperature during conditions where very cold outdoor air causes the supply air temperature to fall below the configured Supply Air Tempering Setpoint. This occurs during periods where DCV is active and increasing the amount of outdoor air or in cases where the system is operating at very low airflow and the calculated economizer position has increased to maintain a constant ventilation rate.
20. Demand limiting in SystemVu™ is achieved through setpoint expansion. The systems heating and cooling setpoints are expanded in steps or levels. The degree to which the setpoints may be expanded is defined by the 6 demand level offsets and the 2 commanded demand limit levels.
21. 3-year limited part warranty.

Part 5 — (23 09 33) Electric and Electronic Control System for HVAC

5.01 (23 09 33.13) Decentralized, Rooftop Units:

A. (23 09 33.13.A.) General:
   1. Shall be complete with self-contained low-voltage control circuit protected by a resettable circuit breaker on the 24-v transformer side. Transformer shall have 75 VA capability.
   2. Shall utilize color-coded wiring.
   3. Shall include a Unit Control Board to conveniently and safely provide connection points for vital control functions such as: smoke detectors, phase monitor, gas controller, economizer, thermostat, DDC control options, and low and high pressure switches. Controller shall also provide an intuitive means to adjust the indoor fan speed through a simple switch and pot adjustment design.
   4. The heat exchanger shall be controlled by an integrated gas controller (IGC) microprocessor. See heat exchanger section of this specification.
   5. Unit shall include a minimum of one 8-pin screw terminal connection board for connection of control wiring.

B. (23 09 33.13.B.) Safeties:
   1. Compressor over-temperature, over-current. High internal pressure differential.
   2. Low Pressure Switch:

      Low pressure switch shall use different color wire than the high pressure switch. The purpose is to assist the installer and service technician to correctly wire and or troubleshoot the rooftop unit.
   3. High Pressure Switch:

      High pressure switch shall use different color wire than the low pressure switch. The purpose is to assist the installer and service technician to correctly wire and or troubleshoot the rooftop unit.
   4. Automatic reset, motor thermal overload protector.
   5. Heating section shall be provided with the following minimum protections:
      a. High temperature limit switches.
      b. Induced draft motor pressure switch.
      c. Flame rollout switch.
      d. Flame proving controls.

1. Third-party trademarks and logos are the property of their respective owners.

6. A2L Refrigerant Leak Dissipation System (Electromechanical):
   a. Leak dissipation system shall consist of control board and A2L sensor certified to UL-60335-2-40.
   b. System shall be designed for the life of the unit.
   c. Dissipation system shall be automatic, ship pre-wired, and require no additional field connections to thermostat to function.
   d. Refrigerant leak sensor shall be installed in UL-certified location and orientation. Sensor shall be self-correcting and resettable. Single use refrigerant leak sensor shall not be permitted.
   e. Factory-installed dissipation controller shall use onboard microprocessor and include:
      1) Automatic reset after a dissipation event has occurred.
      2) Onboard LED with flash code to indicate current unit status and hardware failures.
      3) Depressible "Test" button to allow for a system test and recall/reset of leak detection history.
      4) 24-v dry contact alarm terminal to allow for external notification of leak detection.
   f. Dissipation control board shall be accessible via normal maintenance locations and LED shall be visible.
   g. Dissipation system shall "Fail Safe" per UL requirements.
   h. Dissipation shall allow smoke and building fire systems to override in case of event.
7. A2L Refrigerant Leak Dissipation System (SystemVu):
   a. Leak dissipation system shall consist of control board and A2L sensor certified to UL-60335-2-40, integrated with SystemVu controller.
   b. System shall be designed for the life of the unit.
   c. Dissipation system shall be automatic, ship pre-wired, and require no additional field connections to function.
   d. Refrigerant leak sensor shall be installed in UL-certified location and orientation. Sensor shall be self-correcting and resettable. Single use refrigerant leak sensor shall not be permitted.
   e. Factory-installed dissipation system shall use onboard microprocessor and include:
      1) Automatic leak detection and dissipation algorithm.
      2) Automatic reset after a dissipation event has occurred.
      3) Onboard LED with flash code to indicate current unit status and hardware failures.
      4) Depressible "Test" button to allow for a system test and recall/reset of leak detection history.
      5) 24-v dry contact alarm terminal on dissipation control board to allow for external notification of leak detection.
      6) Ability to notify BAS system of dissipation event via readable alarm point through SystemVu.
      7) Recallable dissipation alarm history on SystemVu controller.
   f. Dissipation control board shall be accessible via normal maintenance locations and LED shall be visible.
   g. Dissipation system shall "Fail Safe" per UL requirements.
   h. Dissipation shall allow smoke and building fire systems to override in case of event.

Part 6 — (23 09 93) Sequence of Operations for HVAC Controls

6.01 (23 09 93.13) Decentralized, Rooftop Units:

A. (23 09 93.13.A.) INSERT SEQUENCE OF OPERATION

Part 7 — (23 40 13) Panel Air Filters

7.01 (23 40 13.13) Decentralized, Rooftop Units:

A. (23 40 13.13.A.) Standard Filter Section:
   1. Shall consist of factory installed, low velocity, disposable 2 in. thick fiberglass filters of commercially available sizes.
   2. Unit shall use only one filter size. Multiple sizes are not acceptable.
   3. Filters shall be accessible through an access panel with "no-tool" removal as described in the unit cabinet section of this specification (23 81 19.13.G).

Part 8 — (23 81 19) Self-Contained Air Conditioners

8.01 (23 81 19.13) Small-Capacity Self-Contained Air Conditioners:

A. (23 81 19.13.A.) General:
   1. Outdoor, rooftop mounted, electrically controlled, heating and cooling unit utilizing a fully hermetic scroll compressor(s) for cooling duty and gas combustion for heating duty.
   2. Factory assembled, single-piece heating and cooling rooftop unit. Contained within the unit enclosure shall be all factory wiring, piping, controls, and special features required prior to field start-up.
   3. Unit shall use Puron Advance™ (R-454B) refrigerant.
   4. Unit shall be installed in accordance with the manufacturer's instructions.

5. Unit must be selected and installed in compliance with local, state, and federal codes.

B. (23 81 19.13.B.) Quality Assurance:
1. Unit meets DOE and ASHRAE 90.1 minimum efficiency requirements.
2. Unit shall be rated in accordance with AHRI Standards 210/240 (04-06 sizes) or 340/360 (07 size).
3. Unit shall be designed to conform to ASHRAE 15.
4. Unit shall be UL-tested and certified in accordance with ANSI Z21.47 Standards and UL-listed and certified under Canadian standards as a total package for safety requirements.
5. Insulation and adhesive shall meet NFPA 90A requirements for flame spread and smoke generation.
6. Unit casing shall be capable of withstanding 500 hour salt spray exposure per ASTM B117 (scribed specimen).
7. Unit shall be designed in accordance with ISO 9001, and shall be manufactured in a facility registered by ISO 9001:2015.
8. Roof curb shall be designed to conform to NRCA Standards.
9. Unit shall be subjected to a completely automated run test on the assembly line. The data for each unit will be stored at the factory, and must be available upon request.
10. Unit shall be designed in accordance with UL Standards 60335-1 and 60335-2-40, including testing to withstand rain. Unit shall be IPX4 rated.
11. Unit shall be constructed to prevent intrusion of snow and tested to prevent snow intrusion into the control box up to 40 mph.
12. Unit shake tested to assurance level 1, ASTM D4169 to ensure shipping reliability.

C. (23 81 19.13.C.) Delivery, Storage, and Handling:
1. Unit shall be stored and handled per manufacturer's recommendations.
2. Lifted by crane requires either shipping top panel or spreader bars.
3. Unit shall only be stored or positioned in the upright position.

D. (23 81 19.13.D.) Project Conditions:
1. As specified in the contract.

E. (23 81 19.13.E.) Operating Characteristics:
1. Unit shall be capable of starting and running at 115°F (46°C) ambient outdoor temperature, meeting maximum load criteria of AHRI Standard 210/240 or 340/360 at ±10% voltage.
2. Compressor with standard controls shall be capable of operation down to 40°F (4°C), ambient outdoor temperatures.
3. Unit shall discharge supply air vertically or horizontally as shown on contract drawings.
4. Unit shall be factory configured for vertical supply and return configurations.
5. Unit shall be field convertible from vertical to horizontal airflow on all models. No special kit required.
6. Unit shall be capable of mixed operation: vertical supply with horizontal return or horizontal supply with vertical return.

F. (23 81 19.13.F.) Electrical Requirements:
1. Main power supply voltage, phase, and frequency must match those required by the manufacturer.

G. (23 81 19.13.G.) Unit Cabinet:
1. Unit cabinet shall be constructed of galvanized steel, and shall be bonderized and coated with a prepainted baked enamel finish on all externally exposed surfaces.
2. Unit cabinet exterior paint shall be: film thickness, (dry) 0.003 inches minimum, gloss (per ASTM D523, 60°F/16°C): 60, Hardness: H-2H Pencil hardness.
3. Evaporator fan compartment interior cabinet insulation shall conform to AHRI Standards 210/240 and or 340/360 minimum exterior sweat criteria. Interior surfaces shall be insulated with a minimum 1/2 in. thick, 1 lb density, flexible fiberglass insulation, neoprene coated on the air side. Aluminum foil-faced fiberglass insulation shall be used in the heat compartment.
4. Base of unit shall have a minimum of 4 locations for thru-the-base gas and electrical connections (factory-installed or field-installed), standard.
5. Base Rail:
   a. Unit shall have base rails on a minimum of 2 sides.
   b. Holes shall be provided in the base rails for rigging shackles to facilitate maneuvering and overhead rigging.
   c. Holes shall be provided in the base rail for moving the rooftop by fork truck.
   d. Base rail shall be a minimum of 16 gauge thickness.
6. Condensate Pan and Connections:
   a. Shall be a sloped condensate drain pan made of a corrosion resistant material.
   b. Shall comply with ASHRAE Standard 62.
   c. Shall use a 3/4 in. 14 NPT drain connection, possible either through the bottom or

side of the drain pan. Connection shall be made per manufacturer's recommendations.

7. Top Panel:
   a. Shall be a single piece top panel on all sizes.
8. Gas Connections:
   a. All gas piping connecting to unit gas valve shall enter the unit cabinet at a single location on side of unit (horizontal plane).
   b. Thru-the-base capability:
      1) Standard unit shall have a thru-the-base gas-line location using a raised, embossed portion of the unit basepan.
      2) Optional, factory approved, water-tight connection method must be used for thru-the-base gas connections.
      3) No basepan penetration, other than those authorized by the manufacturer, is permitted.
9. Electrical Connections:
   a. All unit power wiring shall enter unit cabinet at a single, factory prepared, knockout location.
   b. Thru-the-base capability:
      1) Standard unit shall have a thru-the-base electrical location(s) using a raised, embossed portion of the unit basepan.
      2) Optional, factory approved, water-tight connection method must be used for thru-the-base electrical connections.
      3) No basepan penetration, other than those authorized by the manufacturer, is permitted.
10. Component Access Panels (standard):
   a. Cabinet panels shall be easily removable for servicing.
   b. Unit shall have one factory installed, toolless, removable, filter access panel.
   c. Panels covering control box, indoor fan, indoor fan motor, gas components (where applicable), and compressors shall have molded composite handles.
   d. Handles shall be UV modified, composite. They shall be permanently attached, and recessed into the panel.
   e. Screws on the vertical portion of all removable access panel shall engage into heat resistant, molded composite collars.
   f. Collars shall be removable and easily replaceable using manufacturer recommended parts.

H. (23 81 19.13.H.) Gas Heat:
1. General:
   a. Heat exchanger shall be an induced draft design. Positive pressure heat exchanger designs shall not be allowed.
   b. Shall incorporate a direct-spark ignition system and redundant main gas valve.
   c. Gas supply pressure at the inlet to the rooftop unit gas valve must match that required by the manufacturer.
2. The heat exchanger shall be controlled by an integrated gas controller (IGC) microprocessor.
   a. IGC board shall notify users of fault using an LED (light-emitting diode).
   b. The LED shall be visible without removing the control box access panel.
   c. IGC board shall contain algorithms that modify evaporator fan operation to prevent future cycling on high temperature limit switch.
   d. Unit shall be equipped with anti-cycle protection with one short cycle on unit flame rollout switch or 4 continuous short cycles on the high temperature limit switch. Fault indication shall be made using an LED.
3. Standard Heat Exchanger Construction:
   a. Heat exchanger shall be of the tubular-section type constructed of a minimum of 20-gauge steel coated with a nominal 1.2 mil aluminum-silicone alloy for corrosion resistance.
   b. Burners shall be of the in-shot type constructed of aluminum-coated steel.
   c. Burners shall incorporate orifices for rated heat output up to 2000 ft (610 m) elevation. Additional accessory kits may be required for applications above 2000 ft (610 m) elevation, depending on local gas supply conditions.
   d. Each heat exchanger tube shall contain multiple dimples for increased heating effectiveness.
4. Optional Stainless Steel Heat Exchanger Construction:
   a. Use energy saving, direct-spark ignition system.
   b. Use a redundant main gas valve.
   c. Burners shall be of the in-shot type constructed of aluminum-coated steel.
   d. All gas piping shall enter the unit cabinet at a single location on side of unit (horizontal plane).
   e. The optional stainless steel heat exchanger shall be of the tubular-section type, constructed of a minimum of 20-gauge type 409 stainless steel.
   f. Type 409 stainless steel shall be used in heat exchanger tubes and vestibule plate.
   g. Complete stainless steel heat exchanger allows for greater application flexibility.

5. Optional Low NOx Heat Exchanger Construction:
   a. Low NOx reduction shall be provided to reduce nitrous oxide emissions to be 40 nanograms per joule or less.
   b. Primary tubes and vestibule plates on low NOx units shall be 409 stainless steel. Other components shall be aluminized steel.
6. Standard Stainless Steel Heat Exchanger Construction — Ultra Low NOx Burner Box:
   a. Burners shall be of the premixed type constructed of stainless steel.
   b. Shall use a redundant main gas valve.
   c. Burners shall be of the in-shot type constructed of aluminum-coated steel.
   d. All gas piping shall enter the unit cabinet at a single location on side of unit (horizontal plane).
   e. The stainless steel heat exchanger shall be of the tubular-section type, constructed of a minimum of 20-gauge type 409 stainless steel.
   f. Type 409 stainless steel shall be used in heat exchanger tubes and vestibule plate.
   g. Stainless Steel natural gas burner box and heat exchanger assembly shall provide Ultra Low NOx gas emissions of 14 nanograms/joule (ng/j).
7. Induced Draft Combustion Motor and Blower:
   a. Shall be a direct-drive, single inlet, forward-curved centrifugal type.
   b. Shall be made from steel with a corrosion resistant finish.
   c. Shall have permanently lubricated sealed bearings.
   d. Shall have inherent thermal overload protection.
   e. Shall have an automatic reset feature.

I. (23 81 19.13.I.) Coils:
1. Standard Aluminum Fin-Copper Tube Coils:
   a. Standard evaporator and condenser coils shall have aluminum lanced plate fins mechanically bonded to seamless internal helically grooved copper tubes with all joints brazed.
   b. Evaporator coils shall be leak tested to 150 psig, pressure tested to 450 psig, and qualified to UL 60335-2-40 burst test at 1775 psig.
   c. Condenser coils shall be leak tested to 150 psig, pressure tested to 650 psig, and qualified to UL 60335-2-40 burst test at 1980 psig.
2. Optional Pre-coated Aluminum-Fin Condenser Coils (3-Phase Models Only):
   a. Shall have a durable epoxy-phenolic coating to provide protection in mildly corrosive coastal environments.
   b. Coating shall be applied to the aluminum fin stock prior to the fin stamping process to create an inert barrier between the aluminum fin and copper tube.
   c. Epoxy-phenolic barrier shall minimize galvanic action between dissimilar metals.
   d. Corrosion durability of fin stock shall be confirmed through testing to be no less than 1000 hours salt spray per ASTM B117.
   e. Corrosion durability of fin stock shall be confirmed through testing to have no visible corrosion after 48 hour immersion in a room temperature solution of 5% salt, 1% acetic acid.
   f. Fin stock coating shall pass 2000 hours of the following: one week exposure in the prohesion chamber followed by one week of accelerated ultraviolet light testing. Prohesion chamber: the solution shall contain 3.5% sodium chloride and 0.35% ammonium sulfate. The exposure cycle is one hour of salt fog application at ambient followed by one hour drying at 95°F (35°C).
3. Optional Copper-Fin Evaporator and Condenser Coils (3-Phase Models Only):
   a. Shall be constructed of copper fins mechanically bonded to copper tubes and copper tube sheets.
   b. Galvanized steel tube sheets shall not be acceptable.
   c. A polymer strip shall prevent coil assembly from contacting the sheet metal coil pan to minimize potential for galvanic corrosion between coil and pan.
4. Optional E-coated Aluminum-Fin Evaporator and Condenser Coils (3-Phase Models Only):
   a. Shall have a flexible epoxy polymer coating uniformly applied to all coil surface areas without material bridging between fins.
   b. Coating process shall ensure complete coil encapsulation of tubes, fins and headers.
   c. Color shall be high gloss black with gloss per ASTM D523.
   d. Uniform dry film thickness from 0.8 to 1.2 mil on all surface areas including fin edges.
   e. Superior hardness characteristics of 2H per ASTM D3363 and cross-hatch adhesion of 4B-5B per ASTM D3359.
   f. Impact resistance shall be up to 160 in. lb (ASTM D2794).

g. Humidity and water immersion resistance shall be up to minimum 1000 and 250 hours respectively (ASTM D2247 and ASTM D870).

h. Corrosion durability shall be confirmed through testing to be no less than 1000 hours salt spray per ASTM B117.

J. (23 81 19.13.J.) Refrigerant Components:

1. Refrigerant circuit shall include the following control, safety, and maintenance features:

a. Fixed orifice metering system on 04-06 models and TXV on 07 size models shall include a multiple feed distribution system that optimizes coil performance.

b. Refrigerant filter drier, solid core design with pre and post-filter service gauge connections for filter diagnostics and maintenance.

c. Service gauge connections on suction and discharge lines.

d. Pressure gauge access through a specially designed access port in the top panel of the unit.

2. There shall be gauge line access port in the skin of the rooftop, covered by a black, removable plug.

a. The plug shall be easy to remove and replace.

b. When the plug is removed, the gauge access port shall enable maintenance personnel to route their pressure gauge lines.

c. This gauge access port shall facilitate correct and accurate condenser pressure readings by enabling the reading with the compressor access panel on.

d. The plug shall be made of a leak proof, UV-resistant, composite material.

3. Compressors:

a. Unit shall use fully hermetic scroll compressors.

b. Compressor motors shall be cooled by refrigerant gas passing through motor windings.

c. Compressors shall be internally protected from high discharge temperature conditions.

d. Compressors shall be protected from an over-temperature and over-amperage conditions by an internal, motor overload device.

e. Compressor shall be factory mounted on rubber grommets.

f. Compressor motors shall have internal line break thermal, current overload and high pressure differential protection.

g. Crankcase heaters shall not be required for normal operating range, unless required by compressor manufacturer due to refrigerant charge limits.

h. Compressor on 04-06 models shall be of a single stage cooling capacity design and 07 models shall be a 2 stage cooling capacity design.

K. (23 81 19.13.K.) Filter Section:

1. Filters access is specified in the unit cabinet section of this specification.

2. Filters shall be held in place by a pivoting filter tray, facilitating easy removal and installation.

3. Shall consist of factory installed, low velocity, throw-away 2 in. thick fiberglass filters.

4. Filters shall be standard, commercially available sizes.

5. Only one size filter per unit is allowed.

L. (23 81 19.13.L.) Evaporator Fan and Motor with EcoBlue™ Technology:

1. Direct Drive Evaporator fan motor:

a. Shall be an ECM motor design.

b. Shall be direct drive design for all static options.

c. Shall have permanently lubricated bearings.

d. Shall have inherent automatic-reset thermal overload protection.

e. Shall have slow ramp-up to speed capabilities.

f. Shall require no fan/motor belts for operation, adjustments and or initial fan speed setup.

g. Fan DC voltage set up on Unit Control Board shall eliminate the need of removal of blower access door, required on conventional belt drive systems.

h. Shall be internally protected from electrical phase reversal.

2. Evaporator Fan:

a. Speed shall be easily set with dedicated selection switch and adjustment pot on unit control board or through SystemVu™ controller.

b. On sizes 04-06 single speed indoor fan operation provided and on 07 size model with 2 stage cooling capacity control, the indoor fan speed is automatically controlled to meet the code-compliant 66% low fan speed and 100% at full fan speed operation.

c. Blower fan shall be a vane axial fan design with fan assembly secured directly to ECM motor. Additional shafts, belts, pulleys/sheaves, and bearing blocks to drive fan shall not be permitted or necessary.

d. Additional variable frequency drive to control fan motor speed shall not be permitted or necessary. All speed control electronics must be on board fan motor assembly.

e. Shall be constructed of a cast aluminum stator and high impact composite material on rotor and air inlet casing.

f. Shall be a patented / pending design with a corrosion resistant material.

g. Fan assembly design shall be integrated into fan deck, dynamically balanced, and require no additional vibration isolation for normal operation.

h. Shall have slow ramp-up to speed capabilities to help reduce sound and comfort issues typically associated with single speed belt drive systems.

i. Shall be a slide out design with 2 screw removal.

3. Shall include an easily accessible Unit Control Board to conveniently and safely provide connection points for vital control functions such as: smoke detectors, phase monitor, gas controller, economizer, thermostat, DDC control options, and low and high pressure switches. Controller shall also provide an intuitive means to adjust the indoor fan speed through a simple switch and pot adjustment design.

M. (23 81 19.13.M.) Condenser Fans and Motors:

1. Condenser Fan Motors:

a. Shall be a totally enclosed motor.

b. Shall use permanently lubricated bearings.

c. Shall have inherent thermal overload protection with an automatic reset feature.

d. Shall use a shaft-down design on all sizes.

2. Condenser Fans:

a. Shall be a direct-driven propeller type fan constructed of high impact composite material.

b. Shall have high impact composite blades completely formed into one piece without blade fasteners or connectors and shall be dynamically balanced.

N. (23 81 19.13.N.) Special Features Options and Accessories:

1. Integrated EconomizerONE and EconoMi$er2 Low Leak Rate Models.

a. Integrated, gear driven opposing modulating blade design type capable of simultaneous economizer and compressor operation.

b. Independent modules for vertical or horizontal return configuration shall be available. Vertical return modules shall be available as a factory-installed option.

c. Damper blades shall be galvanized steel with composite gears. Plastic or composite blades on intake or return shall not be acceptable.

d. Shall include all hardware and controls to provide free cooling with outdoor air when temperature and/or humidity are below setpoints.

e. Shall be equipped with gear driven dampers for both the outdoor ventilation air and the return air for positive air stream control.

f. Low leak rate shall be equipped with dampers not to exceed 2% leakage at 1 in. wg pressure differential.

g. Economizer controller on EconomizerONE models shall be the Siemens POL224 that provides:

1) Combined minimum and DCV maximum damper position potentiometers with compressor staging relay.

2) Optional configuration via WLAN stick and Siemens Climatix™[1] smartphone app for easy setup.

3) Functions with solid-state analog enthalpy or dry bulb changeover control sensing.

4) LED indication for free cooling, sensor, and damper operation.

5) One-line LCD interface screen for setup, configuration, and troubleshooting.

6) On-board Fault Detection and Diagnostics (FDD) that senses and alerts when the economizer is not operating properly, per California Title 24, ASHRAE 90.1 and IECC.

7) Sensor failure loss of communication identification.

8) Capabilities for use with multiple-speed or single speed indoor fan systems.

9) Digital sensors: dry bulb and enthalpy.

h. Economizer controller on EconoMi$er 2 models with SystemVu™ controllers shall be a 4 to 20mA design controlled directly by the controller. SystemVu controllers meet California Title 24, ASHRAE 90.1 and IECC Fault Detection and Diagnostic (FDD) requirements.

i. Shall be capable of introducing up to 100% outdoor air.

j. Shall be equipped with a barometric relief damper capable of relieving up to 100% return air and contain seals that meet ASHRAE 90.1 requirements.

k. Shall be designed to close damper(s) during loss-of-power situations with spring return built into motor.

l. Dry bulb outdoor air temperature sensor shall be provided as standard. Enthalpy sensor is also available factory installed only. Outdoor air sensor setpoint shall be adjustable and

1. Third-party trademarks and logos are the property of their respective owners.

shall range from 40°F to 100°F (4°C to 38°C). Additional sensor options shall be available as accessories.

m. The economizer controller shall also provide control of an accessory power exhaust unit function. Factory set at 100%, with a range of 0% to 100%.

n. The economizer shall maintain minimum airflow into the building during occupied period and provide design ventilation rate for full occupancy.

o. Dampers shall be completely closed when the unit is in the unoccupied mode.

p. Economizer controller shall accept a 0 to 10 vdc CO_2 sensor input for IAQ/DCV control. In this mode, dampers shall modulate the outdoor air damper to provide ventilation based on the sensor input.

q. Compressor lockout temperature on POL224 control is adjustable from –45°F to 80°F (–43°C to 26°C), set at a factory default of 32°F (0°C).

r. Actuator shall be direct coupled to economizer gear. No linkage arms or control rods shall be acceptable.

s. Contains LED indication for free cooling, sensor, and damper operations.

2. Integrated EconomizerONE and EconoMi$er®2 Ultra Low Leak Rate Models.

a. Integrated, gear driven opposing modulating blade design type capable of simultaneous economizer and compressor operation.

b. Independent modules for vertical or horizontal return configuration shall be available. Vertical return modules shall be available as a factory-installed option.

c. Damper blades shall be galvanized steel with composite gears. Plastic or composite blades on intake or return shall not be acceptable.

d. Shall include all hardware and controls to provide free cooling with outdoor air when temperature and/or humidity are below setpoints.

e. Shall be equipped with gear driven dampers for both the outdoor ventilation air and the return air for positive air stream control.

f. Ultra Low Leak design meets California Title 24 section 140.4 and ASHRAE 90.1 requirements for 4 cfm per sq ft on the outside air dampers and 10 cfm per sq ft on the return dampers.

g. Economizer controller on EconomizerONE models shall be the Siemens POL224 that provides:

1) One-line LCD interface screen for setup, configuration, and troubleshooting.

2) Optional configuration via WLAN stick and Siemens Climatix™[1] smartphone app for easy setup.

3) On-board Fault Detection and Diagnostics (FDD) that senses and alerts when the economizer is not operating properly, per California Title 24, ASHRAE 90.1 and IECC.

4) Sensor failure loss of communication identification.

5) Capabilities for use with multiple-speed indoor fan systems.

6) Digital sensors: dry bulb and enthalpy.

h. Economizer controller on EconoMi$er 2 models with SystemVu™ controllers shall be a 4 to 20 mA design controlled directly by the controller. SystemVu controllers meet California Title 24, ASHRAE 90.1 and IECC Fault Detection and Diagnostic (FDD) requirements.

i. Shall be capable of introducing up to 100% outdoor air.

j. Shall be equipped with a barometric relief damper capable of relieving up to 100% return air and contain seals that meet ASHRAE 90.1 requirements.

k. Shall be designed to close damper(s) during loss-of-power situations with spring return built into motor.

l. Dry bulb outdoor air temperature sensor shall be provided as standard. Enthalpy sensor is also available factory installed only. Outdoor air sensor setpoint shall be adjustable and shall range from 40°F to 100°F (4°C to 38°C). Additional sensor options shall be available as accessories.

m. The economizer controller shall also provide control of an accessory power exhaust unit function. Factory set at 100%, with a range of 0% to 100%.

n. The economizer shall maintain minimum airflow into the building during occupied period and provide design ventilation rate for full occupancy.

o. Dampers shall be completely closed when the unit is in the unoccupied mode.

p. Economizer controller shall accept a 0 to 10 vdc CO_2 sensor input for IAQ/DCV control. In this mode, dampers shall modulate the outdoor air damper to provide ventilation based on the sensor input.

q. Compressor lockout temperature on POL224 control is adjustable from –45°F to 80°F (–43°C to 26°C), set at a factory default of 32°F (0°C).

1. Third-party trademarks and logos are the property of their respective owners.

r. Actuator shall be direct coupled to economizer gear. No linkage arms or control rods shall be acceptable.

s. Contains LED indication for free cooling, sensor, and damper operation.

3. Wi-Fi/WLAN Stick for EconomizerONE POL224 (field-installed):

   This item allows for the use of the Siemens Climatix™ mobile application.

4. Two-Position Damper (Field-installed only):

   a. Damper shall be a Two-Position Damper. Damper travel shall be from the full closed position to the field adjustable %-open setpoint.

   b. Damper shall include adjustable damper travel from 25% to 100% (full open).

   c. Damper shall include single or dual blade, gear driven dampers and actuator motor.

   d. Actuator shall be direct coupled to damper gear. No linkage arms or control rods shall be acceptable.

   e. Damper will admit up to 100% outdoor air for applicable rooftop units.

   f. Damper shall close upon indoor (evaporator) fan shutoff and/or loss of power.

   g. The damper actuator shall plug into the rooftop unit's wiring harness plug. No hard wiring shall be required.

   h. Outside air hood shall include aluminum water entrainment filter.

5. Manual Damper (Field-installed only):

   Manual damper package shall consist of damper, air inlet screen, and rain hood which can be preset to admit up to 25 or 50% outdoor air for year round ventilation.

6. Humidi-MiZer® Adaptive Dehumidification System (3-Phase Models Only):

   The Humidi-MiZer Adaptive Dehumidification System shall be factory installed and shall provide greater dehumidification of the occupied space by 2 modes of dehumidification operations in addition to its normal design cooling mode:

   a. Subcooling mode further sub cools the hot liquid refrigerant leaving the condenser coil when both temperature and humidity in the space are not satisfied.

   b. Hot gas reheat mode shall mix a portion of the hot gas from the discharge of the compressor with the hot liquid refrigerant leaving the condenser coil to create a 2-phase heat transfer in the system, resulting in a neutral leaving air temperature when only humidity in the space is not satisfied.

   c. Includes low ambient controller.

7. Low Ambient Control Package:

   a. Controller shall control coil head pressure by condenser fan speed modulation or condenser fan cycling and wind baffles.

   b. Shall consist of solid-state control and condenser coil temperature sensor to maintain condensing temperature between 90°F (32°C) and 110°F (43°C) at outdoor ambient temperatures down to –20°F (–29°C). For full low ambient control range, winter start kit is required.

8. Propane Conversion Kit (not available on Ultra Low NOx units):

   a. Package shall contain all the necessary hardware and instructions to convert a standard natural gas unit for use with liquefied propane, up to 2000 ft (610m) elevation.

   b. Additional accessory kits may be required for applications above 2000 ft (610m) elevation.

9. Flue Shield (not available on Ultra Low NOx units):

   Flue shield shall provide protection from the hot sides of the gas flue hood.

10. Condenser Coil Hail Guard Assembly (Factory-installed on 3-Phase Models Only. Field-installed on all 3 and 1-Phase Models.)

    a. Shall protect against damage from hail.

    b. Shall be either hood style or louvered.

11. Unit-Mounted, Non-Fused Disconnect Switch (Available on units with MOCPs of 80 amps or less):

    a. Switch shall be factory installed, internally mounted.

    b. National Electric Code (NEC) and UL approved non-fused switch shall provide unit power shutoff.

    c. Shall be accessible from outside the unit.

    d. Shall provide local shutdown and lockout capability.

    e. Sized only for the unit as ordered from the factory. Does not accommodate field-installed devices.

12. Convenience Outlet:

    a. Factory-Installed Powered Convenience Outlet (3-Phase Models Only):

       1) Outlet shall be powered from main line power to the rooftop unit.

       2) Outlet shall be powered from line side or load side of disconnect by installing contractor, as required by code. If outlet is powered from load side of disconnect, unit electrical ratings shall be UL certified and rated for additional outlet amperage.

3) Outlet shall be factory-installed and internally mounted with easily accessible 115-v female receptacle.
4) Outlet shall include 15 amp GFI receptacles with independent fuse protection.
5) Voltage required to operate convenience outlet shall be provided by a factory installed step-down transformer.
6) Outlet shall be accessible from outside the unit.
7) Outlet shall include a field installed "Wet in Use" cover.

b. Factory-Installed Non-Powered Convenience Outlet:
1) Outlet shall be powered from a separate 115/120-v power source.
2) A transformer shall not be included.
3) Outlet shall be factory-installed and internally mounted with easily accessible 115-v female receptacle.
4) Outlet shall include 15 amp GFI receptacles with independent fuse protection.
5) Outlet shall be accessible from outside the unit.
6) Outlet shall include a field installed "Wet in Use" cover.

c. Field-Installed Non-Powered Convenience Outlet:
1) Outlet shall be powered from a separate 115/120-v power source.
2) A transformer shall not be included.
3) Outlet shall be field-installed and internally mounted with easily accessible 115-v female receptacle.
4) Outlet shall include 20 amp GFI receptacles. This kit provides a flexible installation method which allows code compliance for height requirements of the GFCI outlet from the finished roof surface as well as the capability to relocate the outlet to a more convenient location.
5) Outlet shall be accessible from outside the unit.
6) Outlet shall include a field installed "Wet in Use" cover.

13. Flue Discharge Deflector:
a. Flue discharge deflector shall direct unit exhaust vertically instead of horizontally.
b. Deflector shall be defined as a "natural draft" device by the National Fuel and Gas (NFG) code.

14. Thru-the-Base Connectors:
a. Kits shall provide connectors to permit gas and electrical connections to be brought to the unit through the unit basepan.
b. Minimum of 4 connection locations per unit.

15. Propeller Power Exhaust:
a. Power exhaust shall be used in conjunction with an integrated economizer.
b. Independent modules for vertical or horizontal return configurations shall be available.
c. Horizontal power exhaust shall be mounted in return ductwork.
d. Power exhaust shall be controlled by economizer controller operation. Exhaust fans shall be energized when dampers open past the 0 to 100% adjustable setpoint on the economizer control.

16. Roof Curbs (Vertical):
a. Full perimeter roof curb with exhaust capability providing separate air streams for energy recovery from the exhaust air without supply air contamination.
b. Formed galvanized steel with wood nailer strip and shall be capable of supporting entire unit weight.
c. Permits installation and securing of ductwork to curb prior to mounting unit on the curb.

17. High Altitude Gas Conversion Kit (not available on Ultra Low NOx units):
Package shall contain all the necessary hardware and instructions to convert a standard natural gas unit to operate from 2000 to 7000 ft (610 to 2134 m) elevation with natural gas or from 0 to 7000 ft (0 to 2134 m) elevation with liquefied propane.

18. Outdoor Air Enthalpy Sensor:
The outdoor air enthalpy sensor shall be used to provide single enthalpy control. When used in conjunction with a return air enthalpy sensor, the unit will provide differential enthalpy control. The sensor allows the unit to determine if outside air is suitable for free cooling.

19. Return Air Enthalpy Sensor:
The return air enthalpy sensor shall be used in conjunction with an outdoor air enthalpy sensor to provide differential enthalpy control.

20. Indoor Air Quality (CO_2) Sensor:
a. Shall be able to provide demand ventilation indoor air quality (IAQ) control.
b. The IAQ sensor shall be available in duct mount, wall mount, or wall mount with LED display. The setpoint shall have adjustment capability.

21. Smoke Detectors (factory-installed only):
a. Shall be a 4-Wire Controller and Detector.

b. Shall be environmentally compensated with differential sensing for reliable, stable, and drift-free sensitivity.
c. Shall use magnet-activated test/reset sensor switches.
d. Shall have tool-less connection terminal access.
e. Shall have a recessed momentary switch for testing and resetting the detector.
f. Controller shall include:
1) One set of normally open alarm initiation contacts for connection to an initiating device circuit on a fire alarm control panel.
2) Two Form-C auxiliary alarm relays for interface with rooftop unit or other equipment.
3) One Form-C supervision (trouble) relay to control the operation of the Trouble LED on a remote test/reset station.
4) Capable of direct connection to 2 individual detector modules.
5) Can be wired to up to 14 other duct smoke detectors for multiple fan shutdown applications.

22. Winter Start Kit:
a. Shall contain a bypass device around the low pressure switch.
b. Shall be required when mechanical cooling is required below 40°F (4°C).
c. Shall not be required to operate an economizer for cooling when below an outdoor ambient of 40°F (4°C).
d. Is not compatible with SystemVu controls.

23. Time Guard:
a. Shall prevent compressor short-cycling by providing a 5-minute delay (±2 minutes) before restarting a compressor after shutdown for any reason.
b. One device shall be required per compressor.

24. Hinged Access Panels:
a. Shall provide easy access through integrated quarter turn latches.
b. Shall be on major panels of: filter, control box, fan motor, and compressor.

25. Condensate Overflow Switch:
This sensor and related controller monitors the condensate level in the drain pan and shuts down compression operation when overflow conditions occur. It includes:
a. Indicator light — solid red (more than 10 seconds on water contact — compressors disabled), blinking red (sensor disconnected).
b. 10 second delay to break — eliminates nuisance trips from splashing or waves in pan (sensor needs 10 seconds of constant water contact before tripping).
c. Disables the compressor(s) operation when condensate plug is detected, but still allows fans to run for economizer.

26. 4 in. MERV-13 Return Air Filters (factory-installed only):
a. Factory option to upgrade standard unit filters to 4 in. MERV-13 filters.
b. Upgraded option shall include factory-installed 4 in. filter rack
c. Shall not be compatible with horizontal units with field installed economizers.
d. Shall not be compatible with size 04-06 units with Humidi-MiZer or any single phase units.

27. 4 in. Return Air Rack (field-installed only):
a. Accessory kit is designed to hold 4 in. MERV-8 or MERV-13 filters. Filters not included in kit.
b. Shall not be compatible with horizontal units with field installed economizers.
c. Shall not be compatible with size 04-06 units with Humidi-MiZer.

28. 2 in. MERV-13 Return Air Filters:
a. Accessory kit to field upgrade standard unit filters to 2 in. MERV-13 filters.
b. Correct size and quantity of filters shall ship in a single box.

29. 2 in. MERV-8 Return Air Filters:
a. Accessory kit to field upgrade standard unit filters to 2 in. MERV-8 filters.
b. Correct size and quantity of filters shall ship in a single box.

30. Phase Monitor Control:
a. Shall monitor the sequence of 3-phase electrical system to provide a phase reversal protection.
b. Shall monitor the 3-phase voltage inputs to provide a phase loss protection for the 3-phase device.
c. Will work on either a Delta or Wye power connection.

31. Horn/Strobe Annunciator:
a. Provides an audible/visible signaling device for use with factory-installed option or field-installed accessory smoke detectors.
b. Requires installation of a field-supplied 24-v transformer suitable for 4.2 VA (AC) or 3.0 VA (DC) per horn/strobe accessory.
c. Requires field-supplied electrical box, North American 1-gang box, 2 in. (51 mm) x 4 in. (102 mm).

d. Shall have a clear colored lens.

32. High Short Circuit Current Rating (SCCR) Protection:

a. Factory-installed option shall provide high short circuit current protection to compressor and all indoor and outdoor fan motors rated at 10 kA against high potential fault current situations. (Standard unit comes with 5 kA rating.)

b. This option is not available with factory-installed Ultra Low NOx heater, Humidi-MiZer, powered convenience outlet, non-fused disconnect, low ambient controls, phase loss monitor/protection, or 575-v models.

Note about this specification:
This specification is in the "Masterformat" as published by the Construction Specification Institute. Please feel free to copy this specification directly into your building spec.

Cooling Only/Electric Heat Packaged Rooftop

HVAC Guide Specifications

Size Range: **3 to 6 Nominal Tons**

Carrier Model Number: **50FE-04-07**

Part 1 — (23 06 80) Schedules for Decentralized HVAC Equipment

1.01 (23 06 80.13) Decentralized Unitary HVAC Equipment Schedule:

A. (23 06 80.13.A.) Rooftop Unit (RTU) Schedule:

1. Schedule is per the project specification requirements.

Part 2 — (23 07 16) HVAC Equipment Insulation

2.01 (23 07 16.13) Decentralized, Rooftop Units:

A. (23 07 16.13.A.) Evaporator Fan Compartment:

1. Interior cabinet surfaces shall be insulated with a minimum 1/2 in. thick, minimum 1-1/2 lb density, flexible fiberglass insulation bonded with a phenolic binder, neoprene coated on the air side.
2. Insulation and adhesive shall meet NFPA 90A requirements for flame spread and smoke generation.

B. (23 07 16.13.B.) Electric Heat Compartment:

1. Aluminum foil-faced fiberglass insulation shall be used.
2. Insulation and adhesive shall meet NFPA 90A requirements for flame spread and smoke generation.

Part 3 — (23 09 13) Instrumentation and Control Devices for HVAC

3.01 (23 09 13.23) Sensors and Transmitters:

A. (23 09 13.23.A.) Thermostats:

1. Thermostat must:
   a. energize both "W" and "G" when calling for heat.
   b. have capability to energize 1 or 2 stages of cooling, and 2 different stages of heating.
   c. include capability for occupancy scheduling.

Part 4 — (23 09 23) Direct Digital Control System for HVAC

4.01 (23 09 23.13) Decentralized, Rooftop Units:

A. (23 09 23.13.A.) SystemVu™ intelligent integrated Direct Digital Control (DDC) shall provide:

1. Integrated unit operation for comfort cooling, heating ventilation as well as all monitoring, recording and reporting capabilities. Controller shall also provide diagnostics and alarms of abnormal unit operation through the controller. Controller shall have an intuitive user display and be able to be used in a standalone operation or via building automation system (BAS).
2. Quick Unit Status LEDs of: Run — meaning all systems are go, ALERT — that indicates there is currently a non-critical issue with the unit, like filters need to be replaced and FAULT — that indicates the unit has a critical issue and will possibly shut down.
3. Six large navigation keys for easy access. Navigation keys shall consist of: TEST, BACK, ENTER, and MENU along with UP and DOWN arrows.
4. Full back lit user display with 4 line by 30 character text capabilities. Display menu shall be designed to provide guided major menus and sub menus main menus provided below:
   a. Shutdown Unit
   b. Run Status
   c. Settings
   d. Alerts/Faults
   e. Service
   f. Inputs
   g. Outputs
   h. USB
5. The capability for standalone operation with conventional thermostat/sensor or use with building automation systems (BAS) of Carrier i-Vu®, BACnet™[1], and Carrier Comfort Network® (CCN) systems. No special modules or boards are required for these capabilities. Has the capability to work with Equipment Touch™ and System Touch™ devices and ZS Sensors.
6. The ability to read refrigerant pressures at display or via BAS network of; Discharge Pressure and Suction Pressure. The need for traditional refrigerant gauges is not required.
7. USB Data Port for flash drive interaction. This will allow the transfer of data for uploads, downloads, perform software upgrades, back-up and restore data and file transfer data such as component number of starts and run hours.

1. Third-party trademarks and logos are the property of their respective owners.

8. Reverse Rotation Protection of compressors if field 3-phase wiring is misapplied.
9. Provide Service Capabilities of:
   a. Auto run test
   b. Manual run test
   c. Component run hours and starts
   d. Commissioning reports
   e. Data logging
   f. Alarm history
10. Economizer control and diagnostics. Set up economizer operation, receive feedback from actuator. Also meets the most recent California Title 24, ASHRAE 90.1 and IECC®[1] Fault Detection and Diagnostic (FDD) requirements.
11. Unit cooling operation down to 40°F (4°C).
12. Controller shall have easy access connections around the controller perimeter area and consist of Mate-N-Lok®[1], terminal block and RJ style modular jack connections.
13. 365 day real time clock, 20 holiday schedules along with occupied and unoccupied scheduling.
14. Auto-recognition for easy installation and commissioning of devices like economizers, space sensors, etc.
15. A 5°F (3°C) temperature difference between cooling and heating setpoints to meet the latest ASHRAE 90.1 Energy Standard.
16. Contain return air sensor, supply air sensor and outdoor air sensor to help monitor and provide data for the unit comfort operation, diagnostic and alarms.
17. Use of Carrier's field accessory Equipment Touch and System Touch devices.
18. Units with the factory-installed Humidi-MiZer® system option are capable of providing multiple modes of improved dehumidification as a variation of the normal cooling cycle.
19. Supply Air Tempering control operates the gas or electric heat to maintain a minimum supply air temperature during conditions where very cold outdoor air causes the supply air temperature to fall below the configured Supply Air Tempering Setpoint. This occurs during periods where DCV is active and increasing the amount of outdoor air or in cases where the system is operating at very low airflow and the calculated economizer position has increased to maintain a constant ventilation rate.
20. Demand limiting in SystemVu™ is achieved through setpoint expansion. The systems heating and cooling setpoints are expanded in steps or levels. The degree to which the setpoints may be expanded is defined by the 6 demand level offsets and the 2 commanded demand limit levels.
21. 3-year limited part warranty.

Part 5 — (23 09 33) Electric and Electronic Control System for HVAC

5.01 (23 09 33.13) Decentralized, Rooftop Units:

A. (23 09 33.13.A.) General:
   1. Shall be complete with self-contained low-voltage control circuit protected by a resettable circuit breaker on the 24-v transformer side. Transformer shall have 75 VA capability.
   2. Shall utilize color-coded wiring.
   3. Shall include a Unit Control Board to conveniently and safely provide connection points for vital control functions such as: smoke detectors, phase monitor, economizer, thermostat, DDC control options, and low and high pressure switches. Controller shall also provide an intuitive means to adjust the indoor fan speed through a simple switch and pot adjustment design.
   4. Unit shall include a minimum of one 8-pin screw terminal connection board for connection of control wiring.

B. (23 09 33.13.B.) Safeties:
   1. Compressor over-temperature, over-current. High internal pressure differential.
   2. Low Pressure Switch:

      Low pressure switch shall use different color wire than the high pressure switch. The purpose is to assist the installer and service technician to correctly wire and or troubleshoot the rooftop unit.
   3. High Pressure Switch:

      High pressure switch shall use different color wire than the low pressure switch. The purpose is to assist the installer and service technician to correctly wire and or troubleshoot the rooftop unit.
   4. Heating section shall be provided with the following minimum protections:
      a. High temperature limit switches.
   5. A2L Refrigerant Leak Dissipation System (Electromechanical):
      a. Leak dissipation system shall consist of control board and A2L sensor certified to UL 60335-2-40.
      b. System shall be designed for the life of the unit.
      c. Dissipation system shall be automatic, ship pre-wired, and require no additional field connections to thermostat to function.
      d. Refrigerant leak sensor shall be installed in UL-certified location and orientation. Sensor shall be self-correcting and resettable. Single

1. Third-party trademarks and logos are the property of their respective owners.

use refrigerant leak sensor shall not be permitted.

e. Factory-installed dissipation controller shall use onboard microprocessor and include:
   1) Automatic reset after a dissipation event has occurred.
   2) Onboard LED with flash code to indicate current unit status and hardware failures.
   3) Depressible "Test" button to allow for a system test and recall/reset of leak detection history.
   4) 24-v dry contact alarm terminal to allow for external notification of leak detection.

f. Dissipation control board shall be accessible via normal maintenance locations and LED shall be visible.

g. Dissipation system shall "Fail Safe" per UL requirements.

h. Dissipation shall allow smoke and building fire systems to override in case of event.

6. A2L Refrigerant Leak Dissipation System (SystemVu):
   a. Leak dissipation system shall consist of control board and A2L sensor certified to UL 60335-2-40, integrated with SystemVu controller.
   b. System shall be designed for the life of the unit.
   c. Dissipation system shall be automatic, ship pre-wired, and require no additional field connections to function.
   d. Refrigerant leak sensor shall be installed in UL-certified location and orientation. Sensor shall be self-correcting and resettable. Single use refrigerant leak sensor shall not be permitted.
   e. Factory-installed dissipation system shall use onboard microprocessor and include:
      1) Automatic leak detection and dissipation algorithm.
      2) Automatic reset after a dissipation event has occurred.
      3) Onboard LED with flash code to indicate current unit status and hardware failures.
      4) Depressible "Test" button to allow for a system test and recall/reset of leak detection history.
      5) 24-v dry contact alarm terminal on dissipation control board to allow for external notification of leak detection.
      6) Ability to notify BAS system of dissipation event via readable alarm point through SystemVu.
      7) Recallable dissipation alarm history on SystemVu controller.
   f. Dissipation control board shall be accessible via normal maintenance locations and LED shall be visible.
   g. Dissipation system shall "Fail Safe" per UL requirements.
   h. Dissipation shall allow smoke and building fire systems to override in case of event.

Part 6 — (23 09 93) Sequence of Operations for HVAC Controls

6.01 (23 09 93.13) Decentralized, Rooftop Units:

A. (23 09 93.13.A.) INSERT SEQUENCE OF OPERATION

Part 7 — (23 40 13) Panel Air Filters

7.01 (23 40 13.13) Decentralized, Rooftop Units:

A. (23 40 13.13.A.) Standard Filter Section:
   1. Shall consist of factory installed, low velocity, disposable 2 in. thick fiberglass filters of commercially available sizes.
   2. Unit shall use only one filter size. Multiple sizes are not acceptable.
   3. Filters shall be accessible through an access panel with "no-tool" removal as described in the unit cabinet section of this specification (23 81 19.13.G).

Part 8 — (23 81 19) Self-Contained Air Conditioners

8.01 (23 81 19.13) Small-Capacity Self-Contained Air Conditioners:

A. (23 81 19.13.A.) General:
   1. Outdoor, rooftop-mounted, electrically controlled cooling unit, utilizing a fully hermetic scroll compressor(s) for cooling duty.
   2. Factory assembled, single-piece cooling rooftop unit. Contained within the unit enclosure shall be all factory wiring, piping, controls, and special features required prior to field start-up.
   3. Unit shall use Puron Advance™ (R-454B) refrigerant.
   4. Unit shall be installed in accordance with the manufacturer's instructions.
   5. Unit must be selected and installed in compliance with local, state, and federal codes.

B. (23 81 19.13.B.) Quality Assurance:
   1. Unit meets DOE and ASHRAE 90.1 minimum efficiency requirements.
   2. Unit shall be rated in accordance with AHRI Standards 210/240 (04-06 sizes) or 340/360 (07 size).
   3. Unit shall be designed to conform to ASHRAE 15.
   4. Unit shall be UL-tested and certified in accordance with ANSI Z21.47 Standards and UL-listed and certified under Canadian standards as a total package for safety requirements.

5. Insulation and adhesive shall meet NFPA 90A requirements for flame spread and smoke generation.
6. Unit casing shall be capable of withstanding 500 hour salt spray exposure per ASTM B117 (scribed specimen).
7. Unit shall be designed in accordance with ISO 9001, and shall be manufactured in a facility registered by ISO 9001:2015.
8. Roof curb shall be designed to conform to NRCA Standards.
9. Unit shall be subjected to a completely automated run test on the assembly line. The data for each unit will be stored at the factory, and must be available upon request.
10. Unit shall be designed in accordance with UL Standards 60335-1 and 60335-2-40, including testing to withstand rain. Unit shall be IPX4 rated.
11. Unit shall be constructed to prevent intrusion of snow and tested to prevent snow intrusion into the control box up to 40 mph.
12. Unit shake tested to assurance level 1, ASTM D4169 to ensure shipping reliability.

C. (23 81 19.13.C.) Delivery, Storage, and Handling:
1. Unit shall be stored and handled per manufacturer's recommendations.
2. Lifted by crane requires either shipping top panel or spreader bars.
3. Unit shall only be stored or positioned in the upright position.

D. (23 81 19.13.D.) Project Conditions:
1. As specified in the contract.

E. (23 81 19.13.E.) Operating Characteristics:
1. Unit shall be capable of starting and running at 115°F (46°C) ambient outdoor temperature, meeting maximum load criteria of AHRI Standard 210/240 or 340/360 at ±10% voltage.
2. Compressor with standard controls shall be capable of operation down to 40°F (4°C), ambient outdoor temperatures.
3. Unit shall discharge supply air vertically or horizontally as shown on contract drawings.
4. Unit shall be factory configured for vertical supply and return configurations.
5. Unit shall be field convertible from vertical to horizontal airflow on all models. No special kit required.
6. Unit shall be capable of mixed operation: vertical supply with horizontal return or horizontal supply with vertical return.

F. (23 81 19.13.F.) Electrical Requirements:
1. Main power supply voltage, phase, and frequency must match those required by the manufacturer.

G. (23 81 19.13.G.) Unit Cabinet:
1. Unit cabinet shall be constructed of galvanized steel, and shall be bonderized and coated with a prepainted baked enamel finish on all externally exposed surfaces.
2. Unit cabinet exterior paint shall be: film thickness, (dry) 0.003 in. minimum, gloss (per ASTM D523, 60°F/16°C): 60, Hardness: H-2H Pencil hardness.
3. Evaporator fan compartment interior cabinet insulation shall conform to AHRI Standards 210/240 and or 340/360 minimum exterior sweat criteria. Interior surfaces shall be insulated with a minimum 1/2 in. thick, 1 lb density, flexible fiberglass insulation, neoprene coated on the air side. Aluminum foil-faced fiberglass insulation shall be used in the heat compartment.
4. Base of unit shall have a minimum of 4 locations for thru-the-base gas and electrical connections (factory-installed or field-installed), standard.
5. Base Rail:
   a. Unit shall have base rails on a minimum of 2 sides.
   b. Holes shall be provided in the base rails for rigging shackles to facilitate maneuvering and overhead rigging.
   c. Holes shall be provided in the base rail for moving the rooftop by fork truck.
   d. Base rail shall be a minimum of 16 gauge thickness.
6. Condensate Pan and Connections:
   a. Shall be a sloped condensate drain pan made of a corrosion resistant material.
   b. Shall comply with ASHRAE Standard 62.
   c. Shall use a 3/4 in. 14 NPT drain connection, possible either through the bottom or side of the drain pan. Connection shall be made per manufacturer's recommendations.
7. Top Panel:
   Shall be a single piece top panel on all sizes.
8. Electrical Connections:
   a. All unit power wiring shall enter unit cabinet at a single, factory prepared, knockout location.
   b. Thru-the-base capability:
      1) Standard unit shall have a thru-the-base electrical location(s) using a raised, embossed portion of the unit basepan.
      2) Optional, factory approved, water-tight connection method must be used for thru-the-base electrical connections.
      3) No basepan penetration, other than those authorized by the manufacturer, is permitted.

9. Component Access Panels (standard):
   a. Cabinet panels shall be easily removable for servicing.
   b. Unit shall have one factory installed, toolless, removable, filter access panel.
   c. Panels covering control box, indoor fan, indoor fan motor, gas components (where applicable), and compressors shall have molded composite handles.
   d. Handles shall be UV modified, composite. They shall be permanently attached, and recessed into the panel.
   e. Screws on the vertical portion of all removable access panel shall engage into heat resistant, molded composite collars.
   f. Collars shall be removable and easily replaceable using manufacturer recommended parts.

H. (23 81 19.13.H.) Coils:
1. Standard Aluminum Fin-Copper Tube Coils:
   a. Standard evaporator and condenser coils shall have aluminum lanced plate fins mechanically bonded to seamless internal helically grooved copper tubes with all joints brazed.
   b. Evaporator coils shall be leak tested to 150 psig, pressure tested to 450 psig, and qualified to UL 60335-2-40 burst test at 1775 psig.
   c. Condenser coils shall be leak tested to 150 psig, pressure tested to 650 psig, and qualified to UL 60335-2-40 burst test at 1980 psig.
2. Optional Pre-coated Aluminum-Fin Condenser Coils (3-Phase Models Only):
   a. Shall have a durable epoxy-phenolic coating to provide protection in mildly corrosive coastal environments.
   b. Coating shall be applied to the aluminum fin stock prior to the fin stamping process to create an inert barrier between the aluminum fin and copper tube.
   c. Epoxy-phenolic barrier shall minimize galvanic action between dissimilar metals.
   d. Corrosion durability of fin stock shall be confirmed through testing to be no less than 1000 hours salt spray per ASTM B117.
   e. Corrosion durability of fin stock shall be confirmed through testing to have no visible corrosion after 48 hour immersion in a room temperature solution of 5% salt, 1% acetic acid.
   f. Fin stock coating shall pass 2000 hours of the following: one week exposure in the prohesion chamber followed by one week of accelerated ultraviolet light testing. Prohesion chamber: the solution shall contain 3.5% sodium chloride and 0.35% ammonium sulfate. The exposure cycle is one hour of salt fog application at ambient followed by one hour drying at 95°F (35°C).
3. Optional Copper-Fin Evaporator and Condenser Coils (3-Phase Models Only):
   a. Shall be constructed of copper fins mechanically bonded to copper tubes and copper tube sheets.
   b. Galvanized steel tube sheets shall not be acceptable.
   c. A polymer strip shall prevent coil assembly from contacting the sheet metal coil pan to minimize potential for galvanic corrosion between coil and pan.
4. Optional E-coated Aluminum-Fin Evaporator and Condenser Coils (3-Phase Models Only):
   a. Shall have a flexible epoxy polymer coating uniformly applied to all coil surface areas without material bridging between fins.
   b. Coating process shall ensure complete coil encapsulation of tubes, fins and headers.
   c. Color shall be high gloss black with gloss per ASTM D523.
   d. Uniform dry film thickness from 0.8 to 1.2 mil on all surface areas including fin edges.
   e. Superior hardness characteristics of 2H per ASTM D3363 and cross-hatch adhesion of 4B-5B per ASTM D3359.
   f. Impact resistance shall be up to 160 in.-lb (ASTM D2794).
   g. Humidity and water immersion resistance shall be up to minimum 1000 and 250 hours respectively (ASTM D2247 and ASTM D870).
   h. Corrosion durability shall be confirmed through testing to be no less than 1000 hours salt spray per ASTM B117.

I. (23 81 19.13.I.) Refrigerant Components:
1. Refrigerant circuit shall include the following control, safety, and maintenance features:
   a. Fixed orifice metering system on 04-06 models and TXV on 07 size models shall include a multiple feed distribution system that optimizes coil performance.
   b. Refrigerant filter drier, solid core design with pre and post-filter service gauge connections for filter diagnostics and maintenance.
   c. Service gauge connections on suction and discharge lines.
   d. Pressure gauge access through a specially designed access port in the top panel of the unit.

2. There shall be gauge line access port in the skin of the rooftop, covered by a black, removable plug.
   a. The plug shall be easy to remove and replace.
   b. When the plug is removed, the gauge access port shall enable maintenance personnel to route their pressure gauge lines.
   c. This gauge access port shall facilitate correct and accurate condenser pressure readings by enabling the reading with the compressor access panel on.
   d. The plug shall be made of a leak proof, UV-resistant, composite material.
3. Compressors:
   a. Unit shall use fully hermetic scroll compressors.
   b. Compressor motors shall be cooled by refrigerant gas passing through motor windings.
   c. Compressors shall be internally protected from high discharge temperature conditions.
   d. Compressors shall be protected from an over-temperature and over-amperage conditions by an internal, motor overload device.
   e. Compressor shall be factory mounted on rubber grommets.
   f. Compressor motors shall have internal line break thermal, current overload and high pressure differential protection.
   g. Crankcase heaters shall not be required for normal operating range, unless required by compressor manufacturer due to refrigerant charge limits.
   h. Compressor on 04-06 models shall be of a single stage cooling capacity design and 07 models shall be a 2 stage cooling capacity design.

J. (23 81 19.13.J.) Filter Section:
1. Filters access is specified in the unit cabinet section of this specification.
2. Filters shall be held in place by a pivoting filter tray, facilitating easy removal and installation.
3. Shall consist of factory installed, low velocity, throw-away 2 in. thick fiberglass filters.
4. Filters shall be standard, commercially available sizes.
5. Only one size filter per unit is allowed.

K. (23 81 19.13.K.) Evaporator Fan and Motor with EcoBlue™ Technology:
1. Direct Drive Evaporator Fan Motor:
   a. Shall be an ECM motor design.
   b. Shall be direct drive design for all static options.
   c. Shall have permanently lubricated bearings.
   d. Shall have inherent automatic-reset thermal overload protection.
   e. Shall have slow ramp-up to speed capabilities.
   f. Shall require no fan/motor belts for operation, adjustments and or initial fan speed set up.
   g. Fan DC voltage set up on Unit Control Board can eliminate the need of removal of blower access door, required on conventional belt drive systems.
   h. Shall be internally protected from electrical phase reversal.
2. Evaporator Fan:
   a. Speed shall be easily set with dedicated selection switch and adjustment pot on unit control board or through SystemVu™ controller.
   b. On sizes 04-06 single speed indoor fan operation provided and on 07 size model with 2 stage cooling capacity control, the indoor fan speed is automatically controlled to meet the code-compliant 66% low fan speed and 100% at full fan speed operation.
   c. Blower fan shall be a vane axial fan design with fan assembly secured directly to ECM motor. Additional shafts, belts, pulleys/sheaves, and bearing blocks to drive fan shall not be permitted or necessary.
   d. Additional variable frequency drive to control fan motor speed shall not be permitted or necessary. All speed control electronics must be on board fan motor assembly.
   e. Shall be constructed of a cast aluminum stator and high impact composite material on rotor and air inlet casing.
   f. Shall be a patented / pending design with a corrosion resistant material.
   g. Fan assembly design shall be integrated into fan deck, dynamically balanced, and require no additional vibration isolation for normal operation.
   h. Shall have slow ramp-up to speed capabilities to help reduce sound and comfort issues typically associated with single speed belt drive systems.
   i. Shall be a slide out design with 2 screw removal.
3. Shall include an easily accessible Unit Control Board to conveniently and safely provide connection points for vital control functions such as: smoke detectors, phase monitor, economizer, thermostat, DDC control options, and low and high pressure switches. Controller shall also provide an intuitive means to adjust the indoor fan speed through a simple switch and pot adjustment design.

L. (23 81 19.13.L.) Condenser Fans and Motors:
   1. Condenser Fan Motors:
      a. Shall be a totally enclosed motor.
      b. Shall use permanently lubricated bearings.
      c. Shall have inherent thermal overload protection with an automatic reset feature.
      d. Shall use a shaft-down design on all sizes.
   2. Condenser Fans:
      a. Shall be a direct-driven propeller type fan constructed of high impact composite material.
      b. Shall have high impact composite blades completely formed into one piece without blade fasteners or connectors and shall be dynamically balanced.

M. (23 81 19.13.M.) Special Features Options and Accessories:
   1. Integrated EconomizerONE and EconoMi$er2 Low Leak Rate Models.
      a. Integrated, gear driven opposing modulating blade design type capable of simultaneous economizer and compressor operation.
      b. Independent modules for vertical or horizontal return configuration shall be available. Vertical return modules shall be available as a factory-installed option.
      c. Damper blades shall be galvanized steel with composite gears. Plastic or composite blades on intake or return shall not be acceptable.
      d. Shall include all hardware and controls to provide free cooling with outdoor air when temperature and/or humidity are below setpoints.
      e. Shall be equipped with gear driven dampers for both the outdoor ventilation air and the return air for positive air stream control.
      f. Low leak rate shall be equipped with dampers not to exceed 2% leakage at 1 in. wg pressure differential.
      g. Economizer controller on EconomizerONE models shall be the Siemens POL224 that provides:
         1) Combined minimum and DCV maximum damper position potentiometers with compressor staging relay.
         2) Optional configuration via WLAN stick and Siemens Climatix™[1] smartphone app for easy setup.
         3) Functions with solid-state analog enthalpy or dry bulb changeover control sensing.
         4) LED indication for free cooling, sensor, and damper operation.
         5) One-line LCD interface screen for setup, configuration, and troubleshooting.
         6) On-board Fault Detection and Diagnostics (FDD) that senses and alerts when the economizer is not operating properly, per California Title 24, ASHRAE 90.1 and IECC.
         7) Sensor failure loss of communication identification.
         8) Capabilities for use with multiple-speed or single speed indoor fan systems.
         9) Digital sensors: dry bulb and enthalpy.
      h. Economizer controller on EconoMi$er 2 models with SystemVu™ controllers shall be a 4 to 20 mA design controlled directly by the controller. SystemVu controllers meet California Title 24, ASHRAE 90.1 and IECC Fault Detection and Diagnostic (FDD) requirements.
      i. Shall be capable of introducing up to 100% outdoor air.
      j. Shall be equipped with a barometric relief damper capable of relieving up to 100% return air and contain seals that meet ASHRAE 90.1 requirements.
      k. Shall be designed to close damper(s) during loss-of-power situations with spring return built into motor.
      l. Dry bulb outdoor air temperature sensor shall be provided as standard. Enthalpy sensor is also available on factory installed only. Outdoor air sensor setpoint shall be adjustable and shall range from 40°F to 100°F (4°C to 38°C). Additional sensor options shall be available as accessories.
      m. The economizer controller shall also provide control of an accessory power exhaust unit function. Factory set at 100%, with a range of 0% to 100%.
      n. The economizer shall maintain minimum airflow into the building during occupied period and provide design ventilation rate for full occupancy.
      o. Dampers shall be completely closed when the unit is in the unoccupied mode.
      p. Economizer controller shall accept a 0 to 10 vdc CO_2 sensor input for IAQ/DCV control. In this mode, dampers shall modulate the outdoor air damper to provide ventilation based on the sensor input.
      q. Compressor lockout temperature on POL224 control is adjustable from –45°F to 80°F (–43°C to 26°C), set at a factory default of 32°F (0°C).
      r. Actuator shall be direct coupled to economizer gear. No linkage arms or control rods shall be acceptable.

1. Third-party trademarks and logos are the property of their respective owners.

s. Contains LED indication for free cooling, sensor, and damper operation.

2. Integrated EconomizerONE and EconoMi$er® 2 Ultra Low Leak Rate Models.
   a. Integrated, gear driven opposing modulating blade design type capable of simultaneous economizer and compressor operation.
   b. Independent modules for vertical or horizontal return configuration shall be available. Vertical return modules shall be available as a factory-installed option.
   c. Damper blades shall be galvanized steel with composite gears. Plastic or composite blades on intake or return shall not be acceptable.
   d. Shall include all hardware and controls to provide free cooling with outdoor air when temperature and/or humidity are below setpoints.
   e. Shall be equipped with gear driven dampers for both the outdoor ventilation air and the return air for positive air stream control.
   f. Ultra Low Leak design meets California Title 24 section 140.4 and ASHRAE 90.1 requirements for 4 cfm per sq ft on the outside air dampers and 10 cfm per sq ft on the return dampers.
   g. Economizer controller on EconomizerONE models shall be the Siemens POL224 that provides:
      1) One-line LCD interface screen for setup, configuration, and troubleshooting.
      2) Optional configuration via WLAN stick and Siemens Climatix™ smartphone app for easy setup.
      3) On-board Fault Detection and Diagnostics (FDD) that senses and alerts when the economizer is not operating properly, per California Title 24, ASHRAE 90.1 and IECC.
      4) Sensor failure loss of communication identification.
      5) Capabilities for use with multiple-speed indoor fan systems.
      6) Digital sensors: dry bulb and enthalpy.
   h. Economizer controller on EconoMi$er 2 models with SystemVu™ controls shall be a 4 to 20 mA design controlled directly by the controller. SystemVu controllers meet California Title 24, ASHRAE 90.1 and IECC Fault Detection and Diagnostic (FDD) requirements.
   i. Shall be capable of introducing up to 100% outdoor air.
   j. Shall be equipped with a barometric relief damper capable of relieving up to 100% return air and contain seals that meet ASHRAE 90.1 requirements.
   k. Shall be designed to close damper(s) during loss-of-power situations with spring return built into motor.
   l. Dry bulb outdoor air temperature sensor shall be provided as standard. Enthalpy sensor is also available factory-installed only. Outdoor air sensor setpoint shall be adjustable and shall range from 40°F to 100°F (4°C to 38°C). Additional sensor options shall be available as accessories.
   m. The economizer controller shall also provide control of an accessory power exhaust unit function. Factory set at 100%, with a range of 0% to 100%.
   n. The economizer shall maintain minimum airflow into the building during occupied period and provide design ventilation rate for full occupancy.
   o. Dampers shall be completely closed when the unit is in the unoccupied mode.
   p. Economizer controller shall accept a 0 to 10 vdc CO_2 sensor input for IAQ/DCV control. In this mode, dampers shall modulate the outdoor air damper to provide ventilation based on the sensor input.
   q. Compressor lockout temperature on POL224 control is adjustable from –45°F to 80°F (–43°C to 26°C), set at a factory default of 32°F (0°C).
   r. Actuator shall be direct coupled to economizer gear. No linkage arms or control rods shall be acceptable.
   s. Contains LED indication for free cooling, sensor, and damper operation.
3. Wi-Fi/WLAN Stick for EconomizerONE POL224 (field installed):

   This item allow for the use of the Siemens Climatix™ mobile application.
4. Two-Position Damper (Field-installed only)
   a. Damper shall be a Two-Position Damper. Damper travel shall be from the full closed position to the field adjustable %-open setpoint.
   b. Damper shall include adjustable damper travel from 25% to 100% (full open).
   c. Damper shall include single or dual blade, gear driven dampers and actuator motor.
   d. Actuator shall be direct coupled to damper gear. No linkage arms or control rods shall be acceptable.
   e. Damper will admit up to 100% outdoor air for applicable rooftop units.
   f. Damper shall close upon indoor (evaporator) fan shutoff and/or loss of power.
   g. The damper actuator shall plug into the rooftop unit's wiring harness plug. No hard wiring shall be required.

h. Outside air hood shall include aluminum water entrainment filter.

5. Manual Damper (field-installed only):

   Manual damper package shall consist of damper, air inlet screen, and rain hood which can be preset to admit up to 25% or 50% outdoor air for year round ventilation.

6. Humidi-MiZer Adaptive Dehumidification System (3-Phase Models Only):

   The Humidi-MiZer Adaptive Dehumidification System shall be factory installed and shall provide greater dehumidification of the occupied space by 2 modes of dehumidification operations in addition to its normal design cooling mode:

   a. Subcooling mode further sub cools the hot liquid refrigerant leaving the condenser coil when both temperature and humidity in the space are not satisfied.
   b. Hot gas reheat mode shall mix a portion of the hot gas from the discharge of the compressor with the hot liquid refrigerant leaving the condenser coil to create a 2-phase heat transfer in the system, resulting in a neutral leaving air temperature when only humidity in the space is not satisfied.
   c. Includes low ambient controller.

7. Low Ambient Control Package:

   a. Controller shall control coil head pressure by condenser fan speed modulation or condenser fan cycling and wind baffles.
   b. Shall consist of solid-state control and condenser coil temperature sensor to maintain condensing temperature between 90°F (32°C) and 110°F (43°C) at outdoor ambient temperatures down to –20°F (–29°C). For full low ambient control range, winter start kit is required.

8. Condenser Coil Hail Guard Assembly (Factory-installed on 3-Phase Models Only. Field-installed on all 3 and 1-Phase Models.)

   a. Shall protect against damage from hail.
   b. Shall be either hood style or louvered.

9. Unit-Mounted, Non-Fused Disconnect Switch (Available on units with MOCPs of 80 amps or less):

   a. Switch shall be factory installed, internally mounted.
   b. National Electric Code (NEC) and UL approved non-fused switch shall provide unit power shutoff.
   c. Shall be accessible from outside the unit.
   d. Shall provide local shutdown and lockout capability.
   e. Sized only for the unit as ordered from the factory. Does not accommodate field-installed devices.

10. Convenience Outlet:

   a. Factory-Installed Powered Convenience Outlet (3-Phase Models Only):
      1) Outlet shall be powered from main line power to the rooftop unit.
      2) Outlet shall be powered from line side or load side of disconnect by installing contractor, as required by code. If outlet is powered from load side of disconnect, unit electrical ratings shall be UL certified and rated for additional outlet amperage.
      3) Outlet shall be factory-installed and internally mounted with easily accessible 115-v female receptacle.
      4) Outlet shall include 15 amp GFI receptacles with independent fuse protection.
      5) Voltage required to operate convenience outlet shall be provided by a factory installed step-down transformer.
      6) Outlet shall be accessible from outside the unit.
      7) Outlet shall include a field installed “Wet in Use” cover.
   b. Factory-Installed Non-Powered Convenience Outlet:
      1) Outlet shall be powered from a separate 115/120v power source.
      2) A transformer shall not be included.
      3) Outlet shall be factory-installed and internally mounted with easily accessible 115-v female receptacle.
      4) Outlet shall include 15 amp GFI receptacles with independent fuse protection.
      5) Outlet shall be accessible from outside the unit.
      6) Outlet shall include a field installed “Wet in Use” cover.
   c. Field-Installed Non-Powered Convenience Outlet:
      1) Outlet shall be powered from a separate 115/120-v power source.
      2) A transformer shall not be included.
      3) Outlet shall be field-installed and internally mounted with easily accessible 115-v female receptacle.
      4) Outlet shall include 20 amp GFI receptacles. This kit provides a flexible installation method which allows code compliance for height requirements of the GFCI outlet from the finished roof surface as well as the capability to

relocate the outlet to a more convenient location.

5) Outlet shall be accessible from outside the unit.

6) Outlet shall include a field installed "Wet in Use" cover.

11. Thru-the-Base Connectors:
    a. Kits shall provide connectors to permit gas and electrical connections to be brought to the unit through the unit basepan.
    b. Minimum of 4 connection locations per unit.
12. Propeller Power Exhaust:
    a. Power exhaust shall be used in conjunction with an integrated economizer.
    b. Independent modules for vertical or horizontal return configurations shall be available.
    c. Horizontal power exhaust shall be mounted in return ductwork.
    d. Power exhaust shall be controlled by economizer controller operation. Exhaust fans shall be energized when dampers open past the 0 to 100% adjustable setpoint on the economizer control.
13. Roof Curbs (Vertical):
    a. Full perimeter roof curb with exhaust capability providing separate air streams for energy recovery from the exhaust air without supply air contamination.
    b. Formed galvanized steel with wood nailer strip and shall be capable of supporting entire unit weight.
    c. Permits installation and securing of ductwork to curb prior to mounting unit on the curb.
14. Outdoor Air Enthalpy Sensor:

    The outdoor air enthalpy sensor shall be used to provide single enthalpy control. When used in conjunction with a return air enthalpy sensor, the unit will provide differential enthalpy control. The sensor allows the unit to determine if outside air is suitable for free cooling.
15. Return Air Enthalpy Sensor:

    The return air enthalpy sensor shall be used in conjunction with an outdoor air enthalpy sensor to provide differential enthalpy control.
16. Indoor Air Quality (CO_2) Sensor:
    a. Shall be able to provide demand ventilation indoor air quality (IAQ) control.
    b. The IAQ sensor shall be available in duct mount, wall mount, or wall mount with LED display. The setpoint shall have adjustment capability.
17. Smoke Detectors:
    a. Shall be a 4-wire controller and detector.
    b. Shall be environmentally compensated with differential sensing for reliable, stable, and drift-free sensitivity.
    c. Shall use magnet-activated test/reset sensor switches.
    d. Shall have tool-less connection terminal access.
    e. Shall have a recessed momentary switch for testing and resetting the detector.
    f. Controller shall include:
        1) One set of normally open alarm initiation contacts for connection to an initiating device circuit on a fire alarm control panel.
        2) Two Form-C auxiliary alarm relays for interface with rooftop unit or other equipment.
        3) One Form-C supervision (trouble) relay to control the operation of the Trouble LED on a remote test/reset station.
        4) Capable of direct connection to 2 individual detector modules.
        5) Can be wired to up to 14 other duct smoke detectors for multiple fan shutdown applications.
18. Winter Start Kit:
    a. Shall contain a bypass device around the low pressure switch.
    b. Shall be required when mechanical cooling is required below 40°F (4°C).
    c. Shall not be required to operate on an economizer for cooling when below an outdoor ambient of 40°F (4°C).
19. Time Guard:
    a. Shall prevent compressor short-cycling by providing a 5-minute delay (±2 minutes) before restarting a compressor after shutdown for any reason.
    b. One device shall be required per compressor.
20. Hinged Access Panels:
    a. Shall provide easy access through integrated quarter turn latches.
    b. Shall be on major panels of: filter, control box, fan motor, and compressor.
21. Condensate Overflow Switch:

    This sensor and related controller monitors the condensate level in the drain pan and shuts down compression operation when overflow conditions occur. It includes:
    a. Indicator light — solid red (more than 10 seconds on water contact — compressors disabled), blinking red (sensor disconnected).

b. 10 second delay to break — eliminates nuisance trips from splashing or waves in pan (sensor needs 10 seconds of constant water contact before tripping).

c. Disables the compressor(s) operation when condensate plug is detected, but still allows fans to run for economizer.

22. 4 in. MERV-13 Return Air Filters (factory-installed only):

a. Factory option to upgrade standard unit filters to 4 in. MERV-13 filters.

b. Upgraded option shall include factory-installed 4 in. filter rack.

c. Shall not be compatible with horizontal units with field-installed economizers.

d. Shall not be compatible with size 04-06 units with Humidi-MiZer or any single phase units.

23. 4 in. Return Air Rack (field-installed only):

a. Accessory kit is designed to hold 4 in. MERV-8 or MERV-13 filters. Filters not included in kit.

b. Shall not be compatible with horizontal units with field installed economizers.

c. Shall not be compatible with size 04-06 units with Humidi-MiZer.

24. 2 in. MERV-13 Return Air Filters:

a. Accessory kit to field upgrade standard unit filters to 2 in. MERV-13 filters.

b. Correct size and quantity of filters shall ship in a single box

25. 2 in. MERV-8 Return Air Filters:

a. Accessory kit to field upgrade standard unit filters to 2 in. MERV-8 filters.

b. Correct size and quantity of filters shall ship in a single box.

26. Phase Monitor Control:

a. Shall monitor the sequence of 3-phase electrical system to provide a phase reversal protection.

b. Shall monitor the 3-phase voltage inputs to provide a phase loss protection for the 3-phase device.

c. Will work on either a Delta or Wye power connection.

27. Horn/Strobe Annunciator:

Provides an audible/visible signaling device for use with factory-installed option or field installed accessory smoke detectors.

a. Requires installation of a field-supplied 24-v transformer suitable for 4.2 VA (AC) or 3.0 VA (DC) per horn/strobe accessory.

b. Requires field-supplied electrical box, North American 1-gang box, 2 in. (51 mm) x 4 in. (102 mm).

c. Shall have a clear colored lens.

28. Electric Heat:

a. Heating Section:

1) Heater element open coil resistance wire, nickel-chrome alloy, 0.29 in. inside diameter, strung through ceramic insulators mounted on metal frame. Coil ends are staked and welded to terminal screw slots.

2) Heater assemblies are provided with integral fusing for protection of internal heater circuits. Auto-reset thermo limit controls, magnetic heater contactors (24-v coil), and terminal block all mounted in electric heater control box (minimum 18 ga galvanized steel) attached to end of heater assembly.

29. High Short Circuit Current Rating (SCCR) Protection:

a. Factory-installed option shall provide high short circuit current protection to compressor and all indoor and outdoor fan motors rated at 10 kA against high potential fault current situations. (Standard unit comes with 5 kA rating.)

b. This option is not available with factory-installed Humidi-MiZer, powered convenience outlet, non-fused disconnect, low ambient controls, phase loss monitor/protection, or 575-v models.

Product Data

WeatherMaker® Single Packaged Rooftop

7.5 to 15 Nominal Tons

ecoblue™ technology

Puron ADVANCE™

48/50FE**08, 09, 12, 14, 16

48FE: Single-Package Gas Heating/Electric Cooling Rooftop Units
50FE: Electric Cooling Rooftop Units with Optional Electric Heat with Puron Advance™ Refrigerant (R-454B) and EcoBlue™ Technology

© 2024 Carrier

Features/Benefits

Carrier's WeatherMaker® rooftop units (RTUs) with Puron Advance™ and EcoBlue™ Fan Technology offer an environmentally responsible solution for a brighter future.

For over 70 years the WeatherMaker line has stood for cooling solutions that are innovative, high quality, and easy to use. Carrier's new 48/50FE rooftops continue our legacy of progress with Puron Advance, our low global warming potential refrigerant. With competitive efficiencies, EcoBlue fan technology, locally available stock, and direct fit footprints, new installations and replacements are easier than ever.

New major design features include:

- Environmentally balanced Puron Advance (R-454B) refrigerant, which delivers a 75% reduction in global warming potential (GWP) compared to the original Puron. Puron Advance's GWP of 466 easily exceeds the EPA (Environmental Protection Agency) requirement of <700 GWP.
- A patented, industry-first vane axial indoor fan system with an electronically commutated motor for simplicity and efficiency. When compared to traditional belt-driven forward curve fans, our reliable system has:
  - 75% fewer moving parts
  - Up to 40% greater efficiency
  - No fan belts, pulleys, shaft, or shaft bearings
  - Better sound and comfort due to slow ramp-up capability
  - Internal protection from phase reversal and phase loss situations
  - High external static capability
  - Slide-out blower assembly design
- Reliable and highly safety protected 2 stage cooling with tandem scroll compressors technology, fully active evaporator coil, and mixed air temperature protection on all models
- Unit control board (UCB) with intuitive indoor fan adjustment that uses simple dial and switch configuration
- Reliable copper tube/aluminum fin condenser coil with 5/16 in. tubing to help reduce refrigerant charge and weight versus prior designs

Our WeatherMaker 48/50FE units up to 15 ton are specifically designed to fit on Carrier roof curbs installed as far back as 1989. That makes replacements fast and easy, eliminating the need for curb adapters, different utility connections, or supporting curb overhang situations.

Two-speed staged air volume (SAV) indoor fan speed control helps deliver IEERs up to 15.2. All models are field convertible and capable of either vertical or horizontal airflow. The 15 ton models require a field-installed supply air kit.

With "no-strip" screw collars, handled access panels, and more, the unit is easy to install, easy to maintain, and easy to use. Your new 7.5 to 15 ton Carrier WeatherMaker RTU provides optimum comfort and control from a packaged rooftop.

Value-added features include:

- Optional Humidi-MiZer® adaptive dehumidification system for improved part load humidity performance
- SystemVu™ intuitive intelligent controls option that provides:
  - Large, full text, multi-line display
  - USB flash port for data transfer
  - Built-in i-Vu®, CCN, and BACnet®[1]
  - Easy to read refrigerant pressures shown via the display — no checking gauges
  - Quick LED Status for Run, Alert, and Fault
  - Conventional thermostat or sensor capabilities
  - Historical component runtime and starts
  - Supply air tempering
  - Network Service Tool compatible
- Single point gas and electrical connections
- TXV refrigerant metering devices on 7.5 to 15 ton models
- Scroll compressors with internal line-break overload protection
- Easy-to-access tool-less filter door, filter tracks that tilt out for filter removal and replacement, and filter size consistency across units

1. Third-party trademarks and logos are the property of their respective owners.

Table of contents

	Page
Features/Benefits	2
Model Number Nomenclature	5
Capacity Ratings	7
Physical Data	10
Options and Accessories	14
Base Unit Dimensions	19
Accessory Dimensions	37
Performance Data	39
Fan Data	62
Electrical Data	103
Typical Wiring Diagrams	132
Sequence of Operation	154
Application Data	157
Guide Specifications — 48FE	159
Guide Specifications — 50FE	171

Features/Benefits (cont)

Easy to install

All 7.5 to 15 ton WeatherMaker units are field-convertible to horizontal airflow, which makes it easy to adjust to unexpected jobsite complications. The 15 ton models require a simple supply duct cover kit to field convert from factory vertical to horizontal. Our units are light, making them easy replace and aiding in the structural approval process. Our standard integrated unit control board has simple, fast, clearly labeled plug-in connection points that reduce installation time. Should a job need additional features, our large control box provides room to work and mount Carrier accessories.

Easy to maintain

With the EcoBlue vane axial fan system and a direct drive ECM motor, belts and pulleys are a thing of the past. This frees up maintenance, installation and commissioning time. Should an adjustment be necessary, it can easily be made via the UCB in the control box. For regular service activities, our easy-access handles provide a quick solution to all commonly accessed service panels, and our sloped, corrosion-resistant composite drain pan sheds water and will not rust. Service gauge connections are included on compressor suction/discharge lines before and after the filter drier to monitor system operation during maintenance.

Easy to use

Carrier's re-designed unit control board puts all connections and troubleshooting points in one convenient place. Most low voltage connections use the same board and are easy to access. Setting up the fan is simple using an intuitive switch and rotary dial arrangement. Our rooftops have high and low pressure switches, a new mixed air temperature switch, a filter drier, and 2 in. filters standard.

Puron Advance™ Features

In 2018, Carrier announced Puron Advance (R-454B) as our next generation refrigerant for light commercial rooftops. With a GWP of 466 and similar working pressure and performance to R-410A, Puron Advance easily exceeds the EPA's new, stringent <700 GWP refrigerant requirement while minimizing unit redesign. Like other next generation refrigerants (R-32, etc.), R-454B is classified as an "A2L" refrigerant by ASHRAE®[1] (American Society of Heating, Refrigerating, and Air-Conditioning Engineers). This designation means that R-454B is "mildly flammable" under certain conditions. While this is a change from legacy "A1 — No Flame Propagation" refrigerants like Puron (R-410A), A2Ls are still very low on the flammability scale and quite safe for use. A2L refrigerants are difficult to ignite and have an extremely low flame speed — much less so than natural gas, propane, or even rubbing alcohol. At Carrier, we are committed to safety. As such, all of our Puron Advance rooftop units include a factory-installed dissipation control board and leak sensor designed to last the lifetime of the unit. This system is certified to UL 60335-2-40 and designed to work right away, without any field configuration or wiring. In the event of a leak, these systems automatically identify and resolve the issue by safely dissipating the refrigerant to ensure there is no risk to equipment, buildings, or occupants.

EcoBlue™ Technology

Our direct drive EcoBlue indoor fan system uses vane axial fan and electronically commutated motor. The benefit is clear: when compared to legacy belt drive systems, this vane axial design has 75% fewer moving parts, uses up to 40% less energy, and has no belts, blower bearings, or shaft. The full fan and motor assembly also slides out for easier maintenance and service.

Streamlined control and integration

Carrier controllers make connecting WeatherMaker rooftops into existing building automation systems easy. The units are compatible with conventional thermostat controls or SystemVu controls for greater comfort, diagnostics, and building network integration.

Operating efficiency and flexibility

The 48/50FE rooftops meet the DOE 2023 efficiency standard, as well as ASHRAE (American Society of Heating, Refrigerating, and Air-Conditioning Engineers) 90.1 and IECC®[1] (International Energy Conservation Code) requirements.

Comfort control

Carrier's patented Humidi-MiZer® adaptive dehumidification system is an all-inclusive factory-installed option on gas heating/electric cooling and electric cooling/electric heat models. This system provides reliable, flexible operation to meet indoor part load sensible and latent requirements as well as multiple gas heat and electric heat sized to fit an array of applications.

---

1. Third-party trademarks and logos are the property of their respective owners.

Features/Benefits (cont)

WeatherMaker®
with ecoblue™ technology
48/50FE 7.5 – 12.5 Ton Models

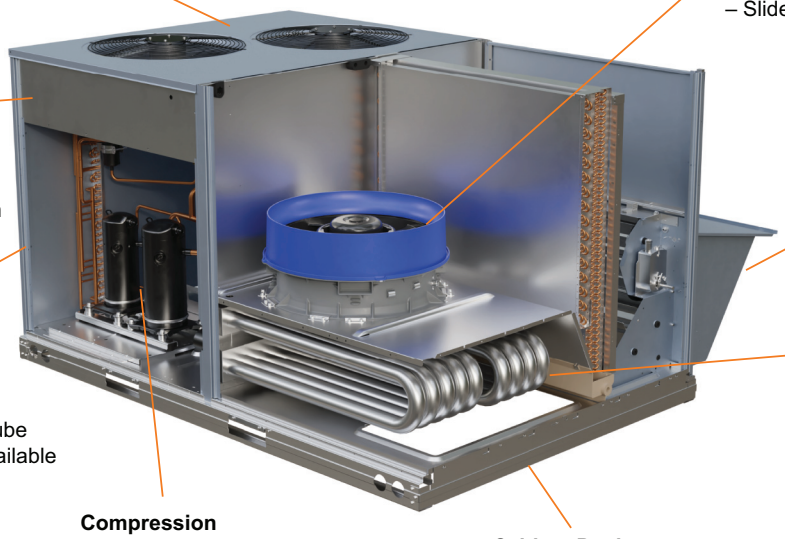

High Efficient Outdoor Fan
– Non-corrosive blades
– Balanced blades
– Efficient airflow collar

Vane Axial Indoor Fan
– Direct drive ECM
– Slow ramp up
– Phase loss protection
– No belts or pulleys
– Slide out design

Unit Controls
– Base unit controller
  Switch/dial fan setting
  Large terminal connections
– SystemVu™ control option

Air Management
– Factory - Field economizers
– 4 in. MERV-13 filters
– Tool-less Filter Access door

Efficient Coils
– Round tube/plate fin
– Copper/Aluminum
– Special coating available
– New 5/16 in. condenser tube
– Humidi-MiZer® system available
– TXV metering device

Heating
– Gas Heating
  Induced draft heat exchanger
  Multiple sizes available
  Efficient dimpled gas design
– Electric Heating
  Multiple sizes available
  Single point power

Compression
– Fully hermitic scroll
– Internally protected
– Tandem stage design
– Safety switch protected

Cabinet Design
– Heavy gauge base rails
– Large handled access panels
– Embossed strengthened base pan

Model number nomenclature

48FE Model Number Nomenclature

Position:	1	2	3	4	5	6	7	8	9	10	11	12	13	14	15	16	17	18
Example:	4	8	F	E	D	M	0	8	A	2	A	5	-	0	A	0	A	0

Unit Heat Type
48 = Gas Heat Packaged Rooftop

Model Series - WeatherMaker®
FE = Entry Tier Puron Advance™

Heat Size
D = Low Heat
E = Medium Heat
F = High Heat
S = Low Heat with Stainless Steel Exchanger
R = Medium Heat with Stainless Steel Exchanger
T = High Heat with Stainless Steel Exchanger

Refrig. Systems Options
M = Two-Stage Cooling, Single Circuit Models
N = Two-Stage Cooling, Single Circuit Models with Humidi-MiZer® System[a]

Cooling Tons
08 = 7.5 tons
09 = 8.5 tons
12 = 10 tons
14 = 12.5 tons
16 = 15 tons

Sensor Options
A = None
B = Return Air Smoke Detector (RA)[b]
C = Supply Air Smoke Detector (SA)
D = RA + SA Smoke Detector[b]
J = Condensate Overflow Switch (COFS)
K = Condensate Overflow Switch + RA Smoke Detectors[b]
L = Condensate Overflow Switch + RA and SA Smoke Detectors[b]
M = Condensate Overflow Switch + SA Smoke Detector

Fan Options
2 = Standard/Medium Static – EcoBlue™ Vane Axial Fan
3 = High Static – EcoBlue Vane Axial Fan
5 = Standard/Medium Static – EcoBlue Vane Axial Fan and Filter Status Switch
6 = High Static – EcoBlue Vane Axial Fan and Filter Status Switch

RTPF Coil Options (Outdoor – Indoor – Hail Guard)
A = Al/Cu – Al/Cu
B = Precoat Al/Cu – Al/Cu
C = E-coat Al/Cu – Al/Cu
D = E-coat Al/Cu – E-coat Al/Cu
M = Al/Cu – Al/Cu — Louvered Hail Guard
N = Precoat Al/Cu – Al/Cu — Louvered Hail Guard
P = E-coat Al/Cu – Al/Cu — Louvered Hail Guard
Q = E-coat Al/Cu – E-coat Al/Cu — Louvered Hail Guard
R = Cu/Cu – Al/Cu — Louvered Hail Guard
S = Cu/Cu – Cu/Cu — Louvered Hail Guard

Voltage
1 = 575-3-60
5 = 208/230-3-60
6 = 460-3-60

Design Revision
- = Factory Design Revision

Base Unit Controls
0 = Standard Electromechanical Controls (can be used with field installed economizers and dampers)
3 = SystemVu™ Controller
8 = Electromechanical Controls with POL224 (includes FDD[e])

Intake / Exhaust Options
A = None
B = Standard Leak Economizer with Barometric Relief[d]
F = Standard Leak Enthalpy Economizer with Barometric Relief[d]
L = ULL (Ultra Low Leak) Temperature Economizer with Barometric Relief and CO_2 Sensor
M = ULL Enthalpy Economizer with Barometric Relief and CO_2 Sensor
U = ULL Temperature Economizer with Barometric Relief
W = ULL Enthalpy Economizer with Barometric Relief

Service Options
0 = None
1 = Unpowered Convenience Outlet (NPCO)
2 = Powered Convenience Outlet (PCO)
3 = Hinged Panels
4 = Hinged Panels + NPCO
5 = Hinged Panels + PCO
6 = 4 in. MERV-13 Filters
7 = NPCO + MERV-13 Filters
8 = PCO + MERV-13 Filters
9 = Hinged Panels + MERV-13 Filters
A = Hinged Panels + NPCO + MERV-13 Filters
B = Hinged Panels + PCO + MERV-13 Filters

Electrical Options
A = None
C = Non-Fused Disconnect (NFDC)
D = Thru-The-Base Connections (TTB)
F = NFDC + TTB
N = Phase Monitor Protection (PMR)
Q = PMR + NFDC
R = PMR + TTB
T = PMR + NFDC + TTB
1 = HSCCR[c] (High Short Circuit Current Rating)
2 = HSCCR[c] + TTB

Packaging & Seismic Compliance
0 = Standard

NOTE (S):
[a] Units with Humidi-MiZer System include Low Ambient controller.
[b] Vertical units only.
[c] Not available on the following models/options: 575V, Humidi-MiZer, Low Ambient Controls, Phase Loss Monitor, Non-Fused Disconnect, Powered Convenience Outlet, or size 14 units.
[d] Not available with SystemVu controller.
[e] Fault Detection and Diagnostic

Model number nomenclature (cont)

50FE Model Number Nomenclature

Position:	1	2	3	4	5	6	7	8	9	10	11	12	13	14	15	16	17	18
Example:	5	0	F	E	-	M	0	8	A	2	A	5	-	0	A	0	A	0

Unit Type
50 – Cooling with Electric Heat

Model Series - WeatherMaker®
FE = Entry Tier Puron Advance™

Heat Size
- = No Heat

Refrig. Systems Options
M = Two-Stage Cooling, Single Circuit Models
N = Two-Stage Cooling, Single Circuit Models with Humidi-MiZer® System[a]

Cooling Tons
08 = 7.5 tons
09 = 8.5 tons
12 = 10 tons
14 = 12.5 tons
16 = 15 tons

Sensor Options
A = None
B = Return Air Smoke Detector (RA)[b]
C = Supply Air Smoke Detector (SA)
D = RA + SA Smoke Detector[b]
J = Condensate Overflow Switch (COFS)
K = Condensate Overflow Switch + RA Smoke Detectors[b]
L = Condensate Overflow Switch + RA and SA Smoke Detectors[b]
M = Condensate Overflow Switch + SA Smoke Detector

Fan Options
2 = Standard/Medium Static – EcoBlue™ Vane Axial Fan
3 = High Static – EcoBlue Vane Axial Fan
5 = Standard/Medium Static – EcoBlue Vane Axial Fan and Filter Status Switch
6 = High Static – EcoBlue Vane Axial Fan and Filter Status Switch

RTPF Coil Options (Outdoor – Indoor – Hail Guard)
A = Al/Cu – Al/Cu
B = Precoat Al/Cu – Al/Cu
C = E-coat Al/Cu – Al/Cu
D = E-coat Al/Cu – E-coat Al/Cu
M = Al/Cu – Al/Cu — Louvered Hail Guard
N = Precoat Al/Cu – Al/Cu — Louvered Hail Guard
P = E-coat Al/Cu – Al/Cu — Louvered Hail Guard
Q = E-coat Al/Cu – E-coat Al/Cu — Louvered Hail Guard
R = Cu/Cu – Al/Cu — Louvered Hail Guard
S = Cu/Cu – Cu/Cu — Louvered Hail Guard

Voltage
1 = 575-3-60
5 = 208/230-3-60
6 = 460-3-60

Packaging
0 = Standard

Electrical Options
A = None
C = Non-Fused Disconnect (NFDC)
D = Thru-The-Base Connections (TTB)
F = NFDC + TTB
N = Phase Monitor Protection (PMR)
Q = PMR + NFDC
R = PMR + TTB
T = PMR + NFDC + TTB
1 = HSCCR[c] (High Short Circuit Current Rating)
2 = HSCCR[c] + TTB

Service Options
0 = None
1 = Unpowered Convenience Outlet (NPCO)
2 = Powered Convenience Outlet (PCO)
3 = Hinged Panels
4 = Hinged Panels + NPCO
5 = Hinged Panels + PCO
6 = 4 in. MERV-13 Filters
7 = NPCO + MERV-13 Filters
8 = PCO + MERV-13 Filters
9 = Hinged Panels + MERV-13 Filters
A = Hinged Panels + NPCO + MERV-13 Filters
B = Hinged Panels + PCO + MERV-13 Filters

Intake / Exhaust Options
A = None
B = Standard Leak Economizer with Barometric Relief[d]
F = Standard Leak Enthalpy Economizer with Barometric Relief[d]
L = ULL (Ultra Low Leak) Temperature Economizer with Barometric Relief and CO_2 Sensor
M = ULL Enthalpy Economizer with Barometric Relief and CO_2 Sensor
U = ULL Temperature Economizer with Barometric Relief
W = ULL Enthalpy Economizer with Barometric Relief

Base Unit Controls
0 = Standard Electromechanical Controls (can be used with field installed economizers and dampers)
3 = SystemVu™ Controller
8 = Electromechanical Controls with POL224 (includes FDD[e])

Design Revision
- = Factory Design Revision

NOTE(S):
[a] Units with Humidi-MiZer System include Low Ambient controller.
[b] Vertical units only
[c] Not available on the following models/options: 575V, Humidi-MiZer, Low Ambient Controls, Phase Loss Monitor, Non-Fused Disconnect, Powered Convenience Outlet, or size 14 units.
[d] Not available with SystemVu™ Controller.
[e] Fault Detection and Diagnostic.

Capacity ratings

48FE AHRI Ratings[a,b,c,d]

48FE UNIT	COOLING STAGES	NOMINAL CAPACITY (tons)	NET COOLING CAPACITY (MBH)	TOTAL POWER (kW)	EER	IEER WITH 2-SPEED INDOOR FAN MOTOR	AHRI RATING CFM	AHRI PART LOAD CFM
48FE*M08	2	7.5	86	7.7	11.2	15.0	2650	1575
48FE*M09	2	8.5	98	8.8	11.2	15.0	3400	1700
48FE*M12	2	10.0	118	10.7	11.0	15.0	3500	2100
48FE*M14	2	12.5	136	12.6	10.8	15.0	3750	2250
48FE*M16	2	15.0	174	16.1	10.8	14.5	5250	3500

NOTE(S):

a. Rated in accordance with AHRI Standards 340/360.
b. Rating are based on:
Cooling Standard: 80°F (27°C) db, 67°F (19°C) wb indoor air temperature and 95°F (35°C) db outdoor air temperature.
IEER Standard: A measure that expresses cooling part-load EER efficiency for commercial unitary air-conditioning and heat pump equipment on the basis of weighted operation at various load capacities.
c. All 48FE units comply with ASHRAE 90.1-2019 (American Society of Heating, Refrigerating, and Air-Conditioning Engineers) and DOE-2023 (Department of Energy) Energy Standard for minimum IEER requirements.
d. 48FE units comply with US Energy Policy Act (2005). To evaluate code compliance requirements, refer to state and local codes.

LEGEND

AHRI — Air-Conditioning, Heating and Refrigeration Institute
EER — Energy Efficiency Ratio
IEER — Integrated Energy Efficiency Ratio

50FE AHRI Ratings[a,b,c,d]

50FE UNIT	COOLING STAGES	NOMINAL CAPACITY (tons)	NET COOLING CAPACITY (MBH)	TOTAL POWER (kW)	EER	IEER WITH 2-SPEED INDOOR FAN MOTOR	AHRI RATING CFM	AHRI PART LOAD CFM
50FE-M08	2	7.5	86	7.5	11.4	15.2	2650	1575
50FE-M09	2	8.5	98	8.6	11.4	15.2	3400	1700
50FE-M12	2	10.0	118	10.5	11.2	15.2	3500	2100
50FE-M14	2	12.5	136	12.1	11.0	15.2	3750	2250
50FE-M16	2	15.0	174	15.8	11.0	14.7	5250	3500

NOTE(S):

a. Rated in accordance with AHRI Standards 340/360.
b. Rating are based on:
Cooling Standard: 80°F (27°C) db, 67°F (19°C) wb indoor air temperature and 95°F (35°C) db outdoor air temperature.
IEER Standard: A measure that expresses cooling part-load EER efficiency for commercial unitary air-conditioning and heat pump equipment on the basis of weighted operation at various load capacities.
c. All 50FE units comply with ASHRAE 90.1-2019 (American Society of Heating, Refrigerating, and Air-Conditioning Engineers) and DOE-2023 (Department of Energy) Energy Standard for minimum IEER requirements.
d. 50FE units comply with US Energy Policy Act (2005). To evaluate code compliance requirements, refer to state and local codes.

LEGEND

AHRI — Air-Conditioning, Heating and Refrigeration Institute
EER — Energy Efficiency Ratio
IEER — Integrated Energy Efficiency Ratio
MBH — Btuh in thousands

Capacity ratings (cont)

Sound Ratings Table[a,b]

48/50FE UNIT	COOLING STAGES	OUTDOOR SOUND (dB) at 60 Hz								
		A-Weighted[c]	63	125	250	500	1000	2000	4000	8000
M08	2	79	85.6	84.7	80.5	76.0	72.4	68.0	62.8	59.3
M09	2	79	85.6	84.7	80.5	76.0	72.4	68.0	62.8	59.3
M12	2	79	85.6	84.7	80.5	76.0	72.4	68.0	62.8	59.3
M14	2	79	85.6	84.7	80.5	76.0	72.4	68.0	62.8	59.3
M16	2	87	87.0	85.2	84.6	84.9	82.2	78.4	75.3	72.9

NOTE(S):

a. Outdoor sound data is measured in accordance with AHRI.
b. Measurements are expressed in terms of sound power. Do not compare these values to sound pressure values because sound pressure depends on specific environmental factors which normally do not match individual applications. Sound power values are independent of the environment and therefore more accurate.
c. A-weighted sound ratings filter out very high and very low frequencies, to better approximate the response of “average” human ear. A-weighted measurements for Carrier units are taken in accordance with AHRI.

LEGEND

dB — Decibel

Minimum - Maximum Airflow Ratings (cfm) — Natural Gas And Propane

48FE UNITS	HEAT LEVEL	COOLING			HEATING[a]	
		Minimum 2-Speed Airflow (Low Speed)	Minimum 2-Speed Airflow (High Speed)	Maximum Airflow cfm	Minimum Airflow cfm	Maximum Airflow cfm
48FE08**	LOW	1350	2250	3750	1730	3800
	MED				2100	3900
	HIGH				2240	4200
48FE09**	LOW	1275	2550	4250	1730	4750
	MED				2100	4560
	HIGH				2240	4800
48FE12**	LOW	1800	3000	5000	2100	5470
	MED				2580	5600
	HIGH				2710	5420
48FE14**	LOW	2250	3750	6250	2100	6830
	MED				2580	6720
	HIGH				2710	6330
48FE16**	LOW	2970	4500	7500	2450	9000
	MED				3000	9000
	HIGH				4040	7500

NOTE(S):

a. Heating rating values are identical for aluminum heat exchangers and stainless steel heat exchangers.

Minimum - Maximum Airflow Ratings (cfm) — Cooling Units and Accessory Electric Heat

50FE UNITS	COOLING			ELECTRIC HEAT[a]	
	Minimum 2-Speed Airflow (Low Speed)	Minimum 2-Speed Airflow (High Speed)	Maximum Airflow cfm	Minimum Airflow cfm	Maximum Airflow cfm
50FE-*08	1350	2250	3750	2250	3750
50FE-*09	1275	2550	4250	2550	4250
50FE-*12	1800	3000	5000	3000	5000
50FE-*14	2250	3750	6250	3750	6250
50FE-*16	2970	4500	7500	4500	7500

NOTE(S):

a. Electric heat modules and single point kits are available as field-installed accessories for 50FE units.

Capacity ratings (cont)

Heat Rating Table — Natural Gas And Propane

48FE UNITS	GAS HEAT	AL/SS HEAT EXCHANGER		TEMPERATURE RISE (°F)	THERMAL EFFICIENCY (%)
		Input/Output Stage 1 (MBH)	Input/Output Stage 2 (MBH)		
48FE08**	LOW	—/—	125/103	25-55	82
	MED	120/98	180/148	35-65	82
	HIGH	180/146	224/181	40-75	81
48FE09**	LOW	—/—	125/103	20-55	82
	MED	120/98	180/148	30-65	82
	HIGH	180/146	224/181	35-75	81
48FE12**	LOW	120/98	180/148	25-65	82
	MED	180/146	224/181	30-65	81
	HIGH	200/164	250/205	35-70	82
48FE14**	LOW	120/98	180/148	20-65	82
	MED	180/146	224/181	25-65	81
	HIGH	200/160	250/205	30-70	82
48FE16**	LOW	144/118	180/146	15-55	81
	MED	192/156	240/195	20-60	81
	HIGH	280/224	350/284	35-65	81

LEGEND

MBH — Btuh in thousands

48/50FE 7.5 to 8.5 Ton Physical Data

48/50FE UNIT	48/50FE*M08	48/50FE*N08	48/50FE*M09	48/50FE*N09
NOMINAL TONS	7.5	7.5	8.5	8.5
BASE UNIT OPERATING WT (lb) 48/50FE[a]	787/743	787/743	868/805	868/805
REFRIGERATION SYSTEM				
No. Circuits/No. Compressors/Type	1 / 2 / Scroll	1 / 2 / Scroll	1 / 2 / Scroll	1 / 2 / Scroll
Puron Advance™ (R-454B) Charge (lb-oz)	10-3	—	10-12	—
Humidi-MiZer® Puron Advance (R-454B) Charge (lb-oz)	—	13-4	—	17-14
Metering Device	TXV	—	TXV	—
Humidi-MiZer Metering Device	—	TXV	—	TXV
High-Pressure Trip/Reset (psig)	630/505	630/505	630/505	630/505
Low-Pressure Trip/Reset (psig)	54/117	54/117	54/117	54/117
EVAPORATOR COIL				
Material (Tube/Fin)	Cu/Al	Cu/Al	Cu/Al	Cu/Al
Coil Type	3/8 in. RTPF	3/8 in. RTPF	3/8 in. RTPF	3/8 in. RTPF
Rows/FPI	3/15	3/15	4/15	4/15
Total Face Area (ft^2)	8.9	8.9	11.1	11.1
Condensate Drain Connection Size	3/4 in.	3/4 in.	3/4 in.	3/4 in.
CONDENSER COIL				
Material	Cu/Al	Cu/Al	Cu/Al	Cu/Al
Coil Type	5/16 in. RTPF	5/16 in. RTPF	5/16 in. RTPF	5/16 in. RTPF
Rows/FPI	2/18	2/18	2/18	2/18
Total Face Area (ft^2)	20.5	20.5	21.4	21.4
HUMIDI-MIZER COIL				
Material	—	Cu/Al	—	Cu/Al
Coil Type	—	5/16 in. RTPF	—	5/16 in. RTPF
Rows/FPI	—	2/18	—	2/18
Total Face Area (ft^2)	—	6.0	—	8.0
EVAPORATOR FAN AND MOTOR				
Standard/Medium Static				
Motor Qty / Drive Type	1 / Direct	1 / Direct	1 / Direct	1 / Direct
Maximum Cont bhp	2.4	2.4	2.4	2.4
Range (rpm)	250-2000	250-2000	250-2000	250-2000
Fan Qty/Type	1/Vane Axial	1/Vane Axial	1/Vane Axial	1/Vane Axial
Fan Diameter (in.)	22	22	22	22
High Static				
Motor Qty / Drive Type	1 / Direct	1 / Direct	1 / Direct	1 / Direct
Maximum Cont bhp	3	3	3	3
Range (rpm)	250-2200	250-2200	250-2200	250-2200
Fan Qty/Type	1/Vane Axial	1/Vane Axial	1/Vane Axial	1/Vane Axial
Fan Diameter (in.)	22	22	22	22
CONDENSER FAN AND MOTOR				
Qty / Motor Drive Type	2 / Direct	2 / Direct	2 / Direct	2 / Direct
Motor hp/rpm	1/4 / 1100	1 / 160-1100	1/4 / 1100	1/4 / 160-1100
Fan Diameter (in.)	22	22	22	22
FILTERS				
RA Filter Qty / Size (in.)	4 / 16 x 20 x 2	4 / 16 x 20 x 2	4 / 20 x 20 x 2	4 / 20 x 20 x 2
OA Inlet Screen Qty / Size (in.)	1 / 20 x 24 x 1	1 / 20 x 24 x 1	1 / 20 x 24 x 1	1 / 20 x 24 x 1

NOTE(S):

a. Base unit operating weight does not include weight of options.

LEGEND

bhp — brake horsepower
FPI — Fins Per Inch
OA — Outdoor Air
RA — Return Air

Physical data (cont)

48/50FE 10 to 12.5 Ton Physical Data

48/50FE UNIT	48/50FE*M12	48/50FE*N12	48/50FE*M14	48/50FE*N14
NOMINAL TONS	10.0	10.0	12.5	12.5
BASE UNIT OPERATING WT (lb) 48FE/50FE[a]	878/815	878/815	1041/978	1041/978
REFRIGERATION SYSTEM				
No. Circuits/No. Compressors/Type	1 / 2 / Scroll	1 / 2 / Scroll	1 / 2 / Scroll	1 / 2 / Scroll
Puron Advance™ (R-454B) Charge (lb-oz)	14-6	—	19-8	—
Humidi-MiZer® Puron Advance™ (R-454B) Charge (lb-oz)	—	21-12	—	28-4
Metering Device	TXV	—	TXV	—
Humidi-MiZer Metering Device	—	TXV	—	TXV
High-Pressure Trip/Reset (psig)	630/505	630/505	630/505	630/505
Low-Pressure Trip/Reset (psig)	54/117	54/117	54/117	54/117
EVAPORATOR COIL				
Material (Tube/Fin)	Cu/Al	Cu/Al	Cu/Al	Cu/Al
Coil Type	3/8 in. RTPF	3/8 in. RTPF	3/8 in. RTPF	3/8 in. RTPF
Rows/FPI	4/15	4/15	4/15	4/15
Total Face Area (ft^2)	11.1	11.1	11.1	11.1
Condensate Drain Connection Size	3/4 in.	3/4 in.	3/4 in.	3/4 in.
CONDENSER COIL				
Material	Cu/Al	Cu/Al	Cu/Al	Cu/Al
Coil Type	5/16 in. RTPF	5/16 in. RTPF	5/16 in. RTPF	5/16 in. RTPF
Rows/FPI	2/18	2/18	3/18	3/18
Total Face Area (ft^2)	25.1	25.1	25.1	25.1
HUMIDI-MIZER COIL				
Material	—	Cu/Al	—	Cu/Al
Coil Type	—	5/16 in. RTPF	—	5/16 in. RTPF
Rows/FPI	—	2/18	—	2/18
Total Face Area (ft^2)	—	8.0	—	8.0
EVAPORATOR FAN AND MOTOR				
Standard/Medium Static				
Motor Qty / Drive Type	1 / Direct	1 / Direct	1 / Direct	1 / Direct
Maximum Cont bhp	2.4	2.4	3	3
Range (rpm)	250-2000	250-2000	250-2200	250-2200
Fan Qty / Type	1 / Vane Axial	1 / Vane Axial	1 / Vane Axial	1 / Vane Axial
Fan Diameter (in.)	22	22	22	22
High Static				
Motor Qty / Drive Type	1 / Direct	1 / Direct	1 / Direct	1 / Direct
Maximum Cont bhp	5	5	5	5
Range (rpm)	250-2200	250-2200	250-2200	250-2200
Fan Qty / Type	1 / Vane Axial	1 / Vane Axial	1 / Vane Axial	1 / Vane Axial
Fan Diameter (in.)	22	22	22	22
CONDENSER FAN AND MOTOR				
Qty / Motor Drive Type	2 / Direct	2 / Direct	1 / Direct	1 / Direct
Motor hp / rpm	1/4 / 1100	1/4 / 160-1100	1 / Multiple Speeds[b]	1 / Multiple Speeds[b]
Fan Diameter (in.)	22	22	22	22
FILTERS				
RA Filter Qty / Size (in.)	4 / 20 x 20 x 2	4 / 20 x 20 x 2	4 / 20 x 20 x 2	4 / 20 x 20 x 2
OA Inlet Screen Qty / Size (in.)	1 / 20 x 24 x 1	1 / 20 x 24 x 1	1 / 20 x 24 x 1	1 / 20 x 24 x 1

NOTE(S):

a. Base unit operating weight does not include weight of options.
b. 1050/770/450/350/265 rpm

LEGEND

bhp — brake horsepower
FPI — Fins Per Inch
OA — Outdoor Air
RA — Return Air

Physical data (cont)

48/50FE 15 Ton Physical Data

48/50FE UNIT	48/50FE*M16	48/50FE*N16
NOMINAL TONS	15.0	15.0
BASE UNIT OPERATING WT (lb) 48FE/50FE[a]	1408/1325	1408/1325
REFRIGERATION SYSTEM		
No. Circuits/No. Compressors/Type	1 / 2 / Scroll	1 / 2 / Scroll
Puron Advance™ (R-454B) Charge (lb-oz)	22-0	—
Humidi-MiZer® Puron Advance™ (R-454B) Charge (lb-oz)	—	31-3
Metering Device	TXV	—
Humidi-MiZer Metering Device	—	TXV
High-Pressure Trip/Reset (psig)	630/505	630/505
Low-Pressure Trip/Reset (psig)	54/117	54/117
EVAPORATOR COIL		
Material (Tube/Fin)	Cu/Al	Cu/Al
Coil Type	3/8 in. RTPF	3/8 in. RTPF
Rows/FPI	3/15	3/15
Total Face Area (ft^2)	17.5	17.5
Condensate Drain Connection Size	3/4 in.	3/4 in.
CONDENSER COIL		
Material	Cu/Al	Cu/Al
Coil Type	5/16 in. RTPF	5/16 in. RTPF
Rows/FPI	2/18	2/18
Total Face Area (ft^2)	46.2	46.2
HUMIDI-MIZER COIL		
Material	—	Cu/Al
Coil Type	—	5/16 in. RTPF
Rows/FPI	—	2/18
Total Face Area (ft^2)	—	8.0
EVAPORATOR FAN AND MOTOR		
Standard/Medium Static		
Motor Qty / Drive Type	1 / Direct	1 / Direct
Maximum Cont bhp	3	3
Range (rpm)	250-2200	250-2200
Fan Qty / Type	1 / Vane Axial	1 / Vane Axial
Fan Diameter (in.)	22	22
High Static		
Motor Qty / Drive Type	1 / Direct	1 / Direct
Maximum Cont bhp	5	5
Range (rpm)	250-2200	250-2200
Fan Qty / Type	1 / Vane Axial	1 / Vane Axial
Fan Diameter (in.)	22	22
CONDENSER FAN AND MOTOR		
Qty / Motor Drive Type	3 / Direct	3 / Direct
Motor hp / rpm	1/4 / 1100	1/4 / 1100
Fan Diameter (in.)	22	22
FILTERS		
RA Filter Qty / Size (in.)	6 / 18 x 24 x 2	6 / 18 x 24 x 2
OA Inlet Screen Qty / Size (in.)	Vertical: 2 / 24 x 27 x 1 Horizontal: 1 / 30 x 39 x 1	Vertical: 2 / 24 x 27 x 1 Horizontal: 1 / 30 x 39 x 1

NOTE(S):

a. Base unit operating weight does not include weight of options.

LEGEND

bhp — brake horsepower
FPI — Fins Per Inch
OA — Outdoor Air
RA — Return Air

Physical data (cont)

48FE 7.5 to 15 Ton Gas Heat Data

48FE UNIT	48FE**08	48FE**09	48FE**12	48FE**14	48FE**16
NOMINAL TONS	7.5	8.5	10.0	12.5	15
GAS CONNECTION					
No. of Gas Valves	1	1	1		1
Natural Gas Supply Line Pressure (in. wg)/(psig)	4-13 / 0.14-0.47	4-13 / 0.14-0.47	4-13 / 0.14-0.47	4-13 / 0.14-0.47	4-13 / 0.14-0.47
Liquid Propane Supply Line Pressure (in. wg)/(psig)	11-13 / 0.40-0.47	11-13 / 0.40-0.47	11-13 / 0.40-0.47	11-13 / 0.40-0.47	11-13 / 0.40-0.47
HEAT ANTICIPATOR SETTING (AMPS)					
First Stage	0.14	0.14	0.14	0.14	0.14
Second Stage	0.14	0.14	0.14	0.14	0.14
NATURAL GAS HEAT					
LOW					
No. of Stages / No. of Burners (total)	1 / 3	1 / 3	2 / 4	2 / 4	2 / 6
Connection Size	1/2 in. NPT	1/2 in. NPT	3/4 in. NPT	3/4 in. NPT	3/4 in. NPT
Rollout Switch Opens / Closes (°F)	195 / 115	195 / 115	195 / 115	196 / 115	196 / 115
Temperature Rise (°F)	25-55	20-55	25-65	20-65	15-55
MEDIUM					
No. of Stages / No. of Burners (total)	2 / 4	2 / 4	2 / 5	2 / 5	2 / 8
Connection Size	3/4 in. NPT	3/4 in. NPT	3/4 in. NPT	3/4 in. NPT	3/4 in. NPT
Rollout Switch Opens / Closes (°F)	195 / 115	195 / 115	195 / 115	195 / 115	197 / 115
Temperature Rise (°F)	35-65	30-65	30-65	25-65	20-60
HIGH					
No. of Stages / No. of Burners (total)	2 / 5	2 / 5	2 / 5	2 / 5	2 / 10
Connection Size	3/4 in. NPT	3/4 in. NPT	3/4 in. NPT	3/4 in. NPT	3/4 in. NPT
Rollout Switch Opens / Closes (°F)	195 / 115	195 / 115	195 / 115	195 / 115	198 / 115
Temperature Rise (°F)	40-75	35-75	35-70	30-70	35-65
LIQUID PROPANE HEAT					
LOW					
No. of Stages / No. of Burners (total)	1 / 3	1 / 3	2 / 4	2 / 4	2 / 6
Connection Size	1/2 in. NPT	1/2 in. NPT	3/4 in. NPT	3/4 in. NPT	3/4 in. NPT
Rollout Switch Opens / Closes (°F)	195 / 115	195 / 115	195 / 115	195 / 115	196 / 115
Temperature Rise (°F)	25-55	20-55	25-65	20-65	15-55
MEDIUM					
No. of Stages / No. of Burners (total)	2 / 4	2 / 4	2 / 5	2 / 5	2 / 8
Connection Size	3/4 in. NPT	3/4 in. NPT	3/4 in. NPT	3/4 in. NPT	3/4 in. NPT
Rollout Switch Opens / Closes (°F)	195 / 115	195 / 115	195 / 115	195 / 115	197 / 115
Temperature Rise (°F)	35-65	30-65	30-65	25-65	20-60
HIGH					
No. of Stages / No. of Burners (total)	2 / 5	2 / 5	2 / 5	2 / 5	2 / 10
Connection Size	3/4 in. NPT	3/4 in. NPT	3/4 in. NPT	3/4 in. NPT	3/4 in. NPT
Rollout Switch Opens / Closes (°F)	195 / 115	195 / 115	195 / 115	195 / 115	198 / 115
Temperature Rise (°F)	40-75	35-75	35-70	30-70	35-65

Options and accessories

ITEM	FACTORY-INSTALLED OPTION	FIELD-INSTALLED ACCESSORY
GAS HEAT (48FE units only)		
Low, Medium, or High Gas Heat — Aluminized Heat Exchanger	X	
Low, Medium or High Gas Heat — Stainless Steel Heat Exchanger	X	
Propane Conversion Kit		X
High Altitude Conversion Kit		X
Flue Discharge Deflector		X
Flue Shield (08-12 sizes only)		X
ELECTRIC HEAT (50FE units only)		
Electric Resistance Heaters		X
Single Point Kits		X
CABINET		
Thru-the-Base Electrical or Gas-Line Connections	X	X
Hinged Access Panels	X	
MERV-8, 2 in. Filters		X
MERV-13, 2 in. Filters		X
MERV-13, 4 in. Filters	X	
4 in. Filter Rack (filters not included)		X
Disconnect Switch Bracket[a]		X
Supply Duct Cover[a]		X
COIL OPTIONS		
Cu/Cu Outdoor and/or Indoor Coils[b]	X	
Pre-coated Outdoor Coils	X	
Premium, E-Coated Outdoor and Indoor Coils	X	
HUMIDITY CONTROL		
Humidi-MiZer® Adaptive Dehumidification System	X	
CONDENSER PROTECTION		
Condenser Coil Hail Guard (louvered design)	X	X
CONTROLS		
Thermostats, Temperature Sensors, And Subbases		X
SystemVu™ DDC Communicating Controller[c]	X	
Smoke Detector (supply and/or return air)	X	X
Horn Strobe Annunciator[d]		X
Time Guard Compressor Delay Control Circuit		X
Phase Monitor	X	X

ITEM	FACTORY-INSTALLED OPTION	FIELD-INSTALLED ACCESSORY
ECONOMIZERS AND OUTDOOR AIR DAMPERS		
EconomizerONE for Electromechanical Controls, complies with FDD (Standard and Ultra Low Leak damper models)[e]	X	X
Wi-Fi Stick for EconomizerONE (optional)		X
EconoMi$er® 2 for DDC controls (Low and Ultra Low Leak air damper models)[c]	X	X
Motorized Two-Position Outdoor-Air Damper		X
Manual Outdoor-Air Damper (25% and 50%)		X
Barometric Relief[f]	X	X
Power Exhaust, Prop Design		X
Condensate Overflow Switch	X	X
ECONOMIZER SENSORS AND IAQ DEVICES		
Single Dry Bulb Temperature Sensors[g]	X	X
Differential Dry Bulb Temperature Sensors[g]		X
Single Enthalpy Sensors[g]		X
Differential Enthalpy Sensors[g]		X
CO_2 Sensor (wall, duct, or unit mounted)[g]	X	X
INDOOR MOTOR AND DRIVE		
Multiple Motor and Drive Packages	X	
Fan Filter Status Switch	X	X
LOW AMBIENT CONTROLS		
Winter Start Kit[h,i]		X
Low Ambient Controller to 0°F (–18°C)[h,j]		X
POWER OPTIONS		
Convenience Outlet (powered)	X	
Convenience Outlet (unpowered)	X	
Convenience Outlet, 20 amp (unpowered)		X
Non-fused Disconnect[k]	X	
High SCCR Protection[l]	X	
ROOF CURBS		
Roof Curb 14 in. (356 mm)		X
Roof Curb 24 in. (610 mm)		X

NOTE(S):

a. For Size 16 units only.
b. Cu/Cu coils are only available with louvered hail guards.
c. Models with SystemVu controls comply with California Title 24 Fault Detection and Diagnostic (FDD).
d. Requires a field-supplied 24V transformer for each application. See price pages for details.
e. FDD (Fault Detection and Diagnostic) capability per California Title 24 section 120.2.
f. Included with economizer.
g. Sensors used to optimize economizer performance.
h. See application data for assistance.
i. Not necessary on SystemVu units, as they are capable of operating at temperatures down to 25°F (4°C).
j. Size 14 models operate down to 0°F (–18°C) standard; Low Ambient control is not available.
k. Non-fused disconnect switch cannot be used when unit FLA electrical rating exceeds:
   48/50FE 08-14: 80 amps all voltages.
   48FE 16: 100 amps 208/230V-3-60, 80 amps 460/575V-3-60
   50FE 16: 200 amps 208/230V-3-60, 100 amps 460/575V-3-60
   Carrier RTUBuilder automatically selects the amp limitations.
l. High SCCR (Short Circuit Current Rating) is not available on the following: units with Humidi-MiZer system, low ambient controls, powered convenience outlet, phase loss monitor, non-fused disconnect, or 575-v. Not available on size 14 units due to control box constraints.

Factory-installed options

Economizer (dry-bulb or enthalpy)

Economizers save money. They bring in fresh, outside air for ventilation and provide outside air to cool your building. This is the preferred method of low-ambient cooling. When used with CO_2 sensors, economizers can provide even more savings by adjusting the ventilation air intake to just the correct amount.

Economizers are available, installed and tested by the factory, with either enthalpy or dry-bulb temperature inputs. Additional sensors are available as accessories to optimize the economizers. Economizers include a barometric relief system to help equalize building pressures.

Economizers can be factory-installed or easily field-installed.

Unit mounted CO_2 sensor

The CO_2 sensor works with the economizer to intake only the correct amount of outside air for ventilation. As occupants fill your building, the CO_2 sensor detects their presence through increasing CO_2 levels and opens the economizer appropriately. When the occupants leave, the CO_2 levels decrease, and the sensor appropriately closes the economizer. This intelligent control of the ventilation air, called demand controlled ventilation (DCV), reduces the overall load on the rooftop, saving money. It is also available as a field-installed accessory.

Smoke detector (supply and/or return air)

Our smoke detectors make your application safer and your job easier. Carrier smoke detectors immediately shut down the rooftop unit when smoke is detected. They are available, installed by the factory, for supply air, return air, or both.

Optional Humidi-MiZer® adaptive dehumidification system

Carrier's Humidi-MiZer adaptive dehumidification system is an all-inclusive factory-installed option that can be ordered with any WeatherMaker® 48/50FE 08-16 rooftop unit.

This system expands the envelope of operation of Carrier's WeatherMaker rooftop products to provide unprecedented flexibility to meet year-round comfort conditions.

The Humidi-MiZer adaptive dehumidification system has a unique dual operational mode setting. It provides greater dehumidification of the occupied space through 2 modes of dehumidification operations in addition to its normal design cooling mode.

When coupled with the Humidi-MiZer system, the 48/50FE 08-16 rooftop is capable of operating in normal design cooling mode, sub-cooling mode, and hot gas reheat mode. Normal design cooling mode is when the unit will operate under its normal sequence of operation by cycling compressors to maintain comfort conditions.

Sub-cooling mode will operate to satisfy part load type conditions when the space requires combined sensible and a higher proportion of latent load control. Hot gas reheat mode operates when outdoor temperatures fall and latent capacity is required for humidity control. Hot gas reheat mode provides neutral air for maximum dehumidification operation.

NOTE: Humidi-MiZer system includes Low Ambient controller.

Thru-the-base connections

Thru-the-base connections, available as a factory option, are necessary to ensure proper connection and seal when routing wire and piping through the rooftop's basepan and curb. These couplings eliminate roof penetration and should be considered for gas lines, main power lines, and control power.

Hinged access panels

These specially designed hinged access panels allow access to unit's major components. Panels allow access to filters, the control box, and the indoor fan motor.

MERV-13 return air filters

This factory option upgrades the return air filters from standard unit filters to high efficiency 4 in. MERV-13 filters. Uses non-woven MERV-13 filter media with a high strength, moisture-resistant frame. Filter media is securely fastened inside the filter frame on all 4 sides.

Cu/Cu (indoor and outdoor) coils

Copper fins and copper tubes are mechanically bonded to copper tubes and copper tube sheets. A polymer strip prevents coil assembly from contacting the sheet metal coil pan to minimize the potential for galvanic corrosion between coil and pan. Only available with louvered hail guards.

E-coated (outdoor and indoor) coils

These coils feature a flexible epoxy polymer coating uniformly applied to all coil surface areas without material bridging between fins. The coating process ensures complete coil encapsulation of tubes, fins, and headers.

Pre-coated outdoor coils

These coils feature a durable epoxy-phenolic coating that provides protection in mildly corrosive coastal environments. The coating minimizes galvanic action between dissimilar metals. The coating is applied to the aluminum fin stock prior to the fin stamping process to create an inert barrier between the aluminum fin and copper tube.

Condenser coil hail guard

These sleek, louvered panels protect the condenser coil from hail damage, foreign objects, and incidental contact. This can be purchased as a factory-installed option or as a field-installed accessory.

Stainless steel heat exchanger (48FE units only)

For this option, the tubular heat exchanger is made out of a minimum 20 gauge type 409 stainless steel for applications where the mixed air going to the heat exchanger is expected to drop below 45°F (7°C). Stainless steel may be specified on applications where the presence of airborne contaminants require its use (applications such as paper mills) or in areas with very high outdoor humidity that may result in severe condensation in the heat exchanger during cooling operation.

Convenience outlet (powered or un-powered)

Reduce service and/or installation costs by including a convenience outlet in your specification. Carrier will install this service feature at our factory. It provides a convenient, 15 amp, 115-v GFCI receptacle with "Wet in Use" cover.

The "powered" option allows the installer to power the outlet from the line side of the disconnect or load side as required by code. The "unpowered" option is to be powered from a separate 115/120-v power source. This

outlet is available as a 15 amp factory-installed option or a 20 amp field-installed accessory.

Non-fused disconnect

This OSHA-compliant, factory-installed safety switch allows a service technician to locally secure power to the rooftop. When selecting a factory-installed non-fused disconnect, note that they are sized for the unit as ordered from the factory. The sizing does not accommodate field-installed items such as power exhaust devices, etc. If field installing electric heat with factory-installed non-fused disconnect switch, a single point kit may or may not be required.

SystemVu™ controller

Carrier's SystemVu controller is an optional factory-installed and tested controller.

This option provides a whole new approach by using an intuitive, intelligent controller that not only monitors and controls the unit but also provides linkage to multiple building automation systems.

Each SystemVu controller makes it easy to set up, service, troubleshoot, access historical data, generate reports, and provide comfort Carrier is noted for.

Key features include:

- Easy-to-read backlit 4-line text screen for superior visibility
- Quick operational condition LEDs for Run, Alert, and Fault
- Simple navigation using large keypad buttons for Navigation arrows, Test, Back, Enter, and Menu.
- Capable of being controlled with a conventional thermostat, space sensor, or build automation system
- Service capabilities include:
  Auto run test
  Manual run test
  Component run hours and starts
  Commissioning reports
  Data logging
- Full range of diagnosis:
  Read refrigerant pressures without needing gauges
  Sensor faults
  Compressor reverse rotation
  Economizer diagnostics that meet California Title 24 requirements
- Quick data transfer via USB port:
  Unit configuration uploading/downloading
  Data logging
  Software upgrades
- Built in capacity for:
  i-Vu® open systems
  BACnet® systems
  CCN systems
- Configuration and alarm point capability:
  Contain over 100 alarm codes
  Contain over 260 status, troubleshooting, diagnostic, and maintenance points
  Contain over 270 control configuration setpoints

Condensate overflow switch

This sensor and related controller monitors the condensate level in the drain pan and shuts down compression operation when overflow conditions occur. This option:

- Includes an indicator light showing when the sensor is disconnected (blinking red) and when there has been more than 10 seconds of water contact (solid red — compressors disabled)
- Includes a 10-second delay to break, which eliminates nuisance trips from splashing or waves in the pan (sensor needs 10 seconds of constant water contact before tripping)
- Disables the compressor(s) operation when a condensate plug is detected but still allows fans to run for the economizer

Fan filter status switch and maintenance indicator

When the optional factory-installed filter maintenance indicator is used, a factory-installed differential pressure switch measures pressure drop across the outside air filter and activates a field-supplied dry contact indicator when the pressure differential exceeds the adjustable switch setpoint.

High Short Circuit Current Rating (SCCR) protection

This factory-installed option provides high short circuit current protection of 10 kA against high potential fault current situations for the compressors and all indoor and outdoor fan motors. (A standard unit comes with a 5 kA rating.)

This option is not available on 575-v models or models with a factory-installed Humidi-MiZer system, low ambient controls, powered convenience outlet, phase loss monitor, or non-fused disconnect. Not available on size 14 units due to control box constraints.

Field-installed accessories

Condenser coil hail guard

These sleek, louvered panels protect the condenser coil from hail damage, foreign objects, and incidental contact. This can be purchased as a factory-installed option or as a field-installed accessory.

Differential enthalpy sensor

The differential enthalpy sensor is comprised of an outdoor and a return air enthalpy sensor to provide differential enthalpy control. The sensor allows the unit to determine if outside air is suitable for free cooling.

Wall or duct mounted CO_2 sensor

The IAQ sensor shall be available in duct or wall mount. The sensor provides demand ventilation indoor air quality (IAQ) control.

Propane conversion kit (48FE units only)

Convert your gas heat rooftop from standard natural gas operation to propane using this field-installed kit.

High altitude conversion kit (48FE units only)

High altitudes have less oxygen, which affects the fuel/air mixture in heat exchangers. In order to maintain a proper fuel/air mixture, heat exchangers operating in altitudes above 2000 ft (610 m) require different orifices. To select the correct burner orifices or determine the heat capacity for a high altitude application, use either the selection software or the unit's service manual. High altitudes have less oxygen, which means heat exchangers need less fuel. The new gas orifices in this field-installed kit make the necessary adjustment for high altitude applications. They restore the optimal fuel to air mixture and maintain healthy combustion on altitudes above 2000 ft (610 m).

NOTE: Typical natural gas heating value ranges from 975 to 1050 Btu/ft^3 at sea level nationally. The heating value goes down approximately 1.7% per every thousand feet of elevation. Standard factory orifices can typically be used up to 2000 ft (610 m) elevations without any operational issues.

Flue discharge deflector (48FE units only)

The flue discharge deflector is a useful accessory when flue gas recirculation is a concern. By venting the flue discharge upwards, the deflector minimizes the chance for a neighboring unit to intake the flue exhaust.

Filter rack kit (4 in.)

The 4 in. filter rack accessory kit is designed to hold 4 in. MERV-8 or MERV-13 filters. Filters not included in kit.

MERV-13 2 in. return air filters

This kit includes MERV-13 2 in. filters to accommodate unit filter rack size.

MERV-8 2 in. return air filters

This kit includes MERV-8 2 in. filters to accommodate unit filter rack size.

Phase monitor protection

The phase monitor control monitors the sequence of the 3-phase electrical system to provide a phase reversal protection and monitors the 3-phase voltage inputs to provide phase loss protection for the 3-phase device. It will work on either a Delta or Wye power connection.

Winter start kit

Carrier's winter start kit extends the low ambient limit of your rooftop to 25°F (–4°C). The kit bypasses the low pressure switch, preventing nuisance tripping of the low pressure switch. Other low ambient precautions may still be prudent.

Low ambient controller[1]

The low ambient controller is a head pressure controller kit designed to maintain the unit's condenser head pressure during periods of low ambient cooling operation. This device should be used as an alternative to economizer free cooling when economizer usage is either not appropriate o not desired. The low ambient controller will either cycle the outdoor fan motors or operate them at reduced speed to maintain the unit operation, depending on the model. This controller allows cooling operation down to 0°F (–18°C) ambient conditions.

Roof curb (14 in./356 mm or 24 in./610 mm)

This full perimeter roof curb with exhaust capability provides separate air streams.

Fan filter status switch and maintenance indicator

When a field-installed filter maintenance indicator is used, a field-installed differential pressure switch measures pressure drop across the outside air filter and activates a field-supplied dry contact indicator when the pressure differential exceeds the adjustable switch setpoint.

Power exhaust

This accessory provides superior internal building pressure control and may eliminate the need for costly external pressure control fans.

Manual OA damper

Manual outdoor air dampers are an economical way to bring in ventilation air. The dampers are available in 25% and 50% versions.

Motorized two-position damper

The Carrier two-position, motorized outdoor air damper admits outside air. Using reliable, gear-driven technology, the two-position damper opens to allow ventilation air and closes when the rooftop stops, stopping unwanted infiltration.

Electric heaters (50FE units only)

Carrier offers a full-line of field-installed accessory heaters. The heaters are very easy to use and install, and they are all pre-engineered and certified.

Time Guard II control circuit

This accessory protects your compressor by preventing short-cycling in the event of some other failure by preventing the compressor from restarting for 30 seconds after stopping. (Not required with SystemVu™ controller or authorized commercial thermostats.)

Disconnect switch bracket

The accessory provides a pre-engineered and sized mounting bracket for applications requiring a unit-mounted fused and non-fused disconnect of greater than 100 amps. The bracket assures that no damage occurs to coils when mounting with screws and other fasteners (size 16 only).

Wi-Fi Stick for EconomizerONE (optional)

The accessory Wi-Fi/WLAN stick can be connected to the EconomizerONE POL224 economizer controller via the USB host interface. The Wi-Fi stick enables a wireless connection to be made between a smartphone and the economizer controller via the Climatix™[2] mobile application for commissioning, troubleshooting, and maintenance operations. The Wi-Fi stick is required to utilize the mobile application but is not required for EconomizerONE setup and commissioning.

Climatix™ mobile application

The Climatix™ mobile application offers a best-in-class user interface and a simple step-by-step commissioning workflow using a mobile device. The user interface walks users through the setup of the controller and allows users to view the operating mode and parameters. Users can adjust setpoints, initiate damper tests, and save the final configuration as a favorite to expedite setup in the future.

The application is available on Android™[2] and Apple iOS®[2] platforms. The Wi-Fi stick for the EconomizerONE is required to join the Siemens-WiFi-Stick network and setup the controller on a smartphone.

NOTE: The Climatix app is not required to commission the EconomizerONE controller. The unit can be set up using the controller's on board button system.

1. Size 14 models operate down to 0°F (-18°C) standard; Low Ambient controller is not available.

2. Third-party trademarks and logos are the property of their respective owners.

Options and accessories (cont)

Options And Accessory Weights[a]

OPTION / ACCESSORY NAME	48/50FE UNIT WEIGHT									
	08		09		12		14		16	
	lb	kg	lb	kg	lb	kg	lb	kg	lb	kg
Humidi-MiZer® System[b]	25	12	34	16	34	16	34	16	55	25
Power Exhaust	55	25	55	25	55	25	55	25	85	39
EconomizerONE or EconoMi$er® 2	75	34	75	34	75	34	75	34	135	62
Two-Position Damper	58	26	58	26	58	26	58	26	65	29
Manual Damper	18	8	18	8	18	8	18	8	25	11
High Gas Heat (48FE units only)	81	37	81	37	86	39	86	39	117	53
Hail Guard (louvered)	17	8	17	8	17	8	17	8	44	20
Cu/Cu Condenser Coil	85	39	85	39	100	46	150	68	180	82
Cu/Cu Evaporator Coil	50	23	100	46	100	46	100	46	120	55
Roof Curb (14 in. curb)	143	65	143	65	143	65	143	65	180	82
Roof Curb (24 in. curb)	245	112	245	112	245	112	245	112	255	116
CO_2 Sensor	2	1	2	1	2	1	2	1	2	1
Flue Discharge Deflector	7	3	7	3	7	3	7	3	7	3
Optional Indoor Motor[c]	30	14	30	14	30	14	0	0	0	0
Low Ambient Controller	9	4	9	4	9	4	9	4	9	4
Winter Start Kit	5	2	5	2	5	2	5	2	5	2
Return Air Smoke Detector	7	3	7	3	7	3	7	3	7	3
Supply Air Smoke Detector	7	3	7	3	7	3	7	3	7	3
Fan Filter Switch	2	1	2	1	2	1	2	1	2	1
Non-Fused Disconnect	15	7	15	7	15	7	15	7	15	7
Powered Convenience Outlet[d]	36	16	36	16	36	16	36	16	36	16
Unpowered Convenience Outlet	4	2	4	2	4	2	4	2	4	2
Enthalpy Sensor	2	1	2	1	2	1	2	1	2	1
Differential Enthalpy Sensor	3	1	3	1	3	1	3	1	3	1

NOTE(S):

a. Where multiple variations are available, the heaviest combination is listed.
b. For Humidi-MiZer system, add Low Ambient controller weight.
c. Add the Optional Indoor Motor weight to the weight of the base unit.
d. Weight includes convenience outlet and convenience outlet transformer.

48FE**08-12 Base Unit Dimensions

NOTES:

1. DIMENSIONS ARE IN INCHES, DIMENSIONS IN [ ] ARE IN MILLIMETERS.
2. CENTER OF GRAVITY
3. DIRECTION OF AIR FLOW
4. ALL VIEW DRAWN USING 3RD ANGLE

UNIT	OUTDOOR COIL TYPE	J	K	H
48FE-M08	RTPF	41 1/4 [1048]	33 3/4 [857]	15 7/8 [403]
48FE-M09	RTPF	49 3/8 [1253]	36 3/8 [925]	15 7/8 [403]
48FE-M12	RTPF	49 3/8 [1253]	36 3/8 [925]	15 7/8 [403]
RTPF - ROUND TUBE, PLATE FIN (COPPER/ALUM)				

Carrier

THIS DOCUMENT IS THE PROPERTY OF CARRIER CORPORATION AND IS DELIVERED UPON THE EXPRESS CONDITION THAT THE CONTENTS WILL NOT BE DISCLOSED OR USED WITHOUT CARRIER CORPORATION'S WRITTEN CONSENT.

SUBMISSION OF THESE DRAWINGS OR DOCUMENTS DOES NOT CONSTITUTE PART PERFORMANCE OR ACCEPTANCE OF CONTRACT.

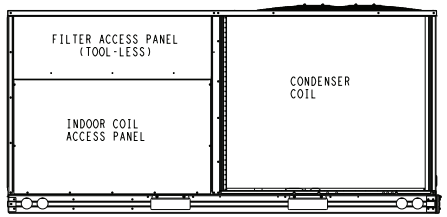

BACK

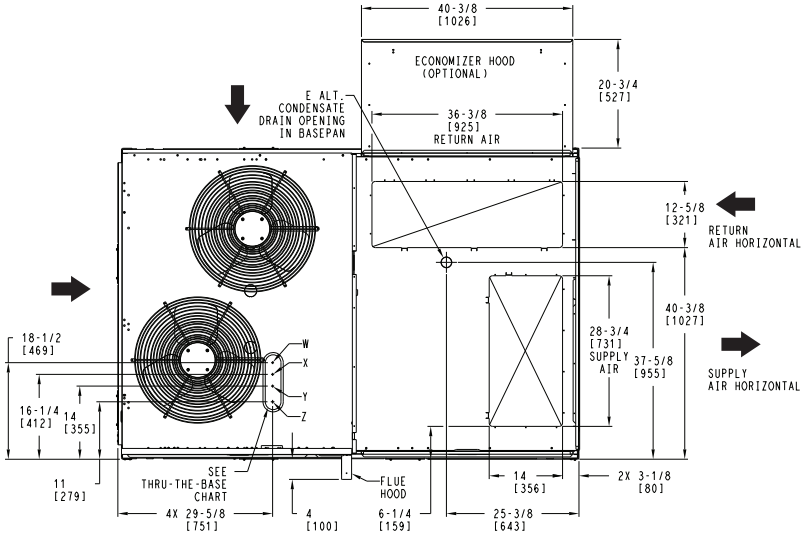

TOP

	CONNECTION SIZES
A	1 3/8" [35] DIA FIELD POWER SUPPLY HOLE
B	2 1/2" [64] DIA POWER SUPPLY KNOCKOUT
C	1 3/4" [51] DIA GAUGE ACCESS PLUG
D	7/8" [22] DIA FIELD CONTROL WIRING HOLE
E	3/4"-14 NPT CONDENSATE DRAIN
F	1/2"-14 NPT GAS CONNECTION 3/4"-14 NPT GAS CONNECTION
G	2" [51] DIA POWER SUPPLY KNOCK-OUT

THRU-THE-BASE CHART (FIELD INST)

THESE HOLES REQUIRED FOR USE WITH ACCY KITS:
CRBTMPWR002A01: GAS THRU CURB
CRBTMPWR004A01: GAS THRU BASEPAN

	THREADED CONDUIT SIZE	WIRE USE	REQ'D HOLE SIZES (MAX.)
W	1/2"	ACC.	7/8" [22.2]
X	1/2"	24V	7/8" [22.2]
Y	1 1/4" (002,004)	POWER	1 3/4" [44.4]
Z *	(004) 3/4" FPT	GAS	1 3/4" [44.4]
*	(002) PROVIDES 3/4" FPT THRU CURB FLANGE & FITTING. HOLE SIZE: 2" [50.8]		

THRU-THE-BASE CHART (FIOP)

FOR "THRU-THE-BASEPAN" FACTORY OPTION, FITTINGS FOR ONLY X, Y, & Z ARE PROVIDED. **

**	FOR BELOW LISTED MODELS, A FIELD SUPPLIED 1/2" ADAPTER IS REQUIRED BETWEEN BASE PAN FITTING AND GAS VALVE: 48FCD,S*08,09

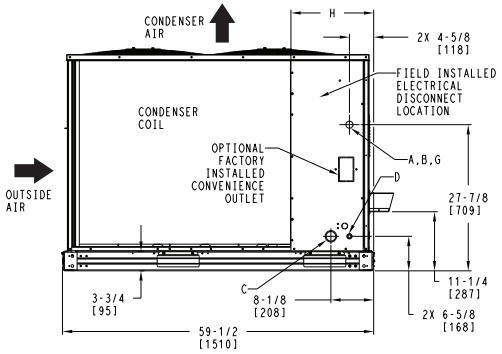

LEFT

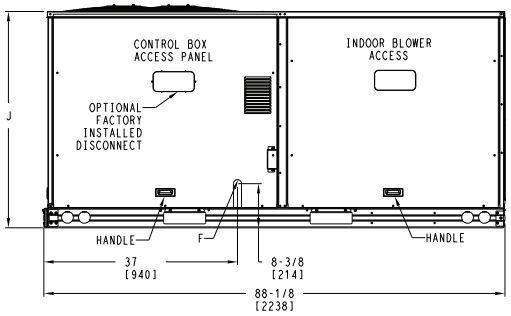

FRONT

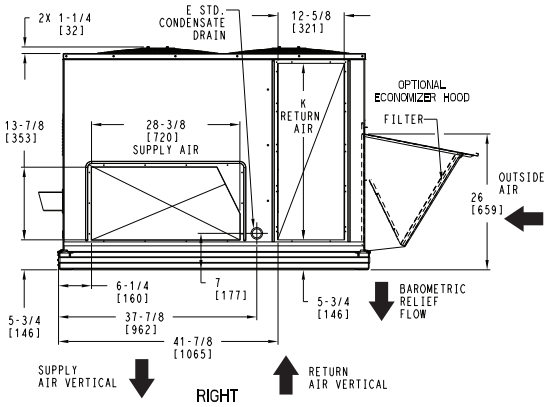

RIGHT

ITC CLASSIFICATION	SHEET	DATE	SUPERCEDES			REV
U.S. ECCN:NSR	1 OF 3	8/8/23	-	48FE 08-12 SINGLE ZONE ELECTRICAL COOLING WITH GAS HEAT	48TM009320	-

48FE**08-12 Base Unit Dimensions (cont)

Carrier | THIS DOCUMENT IS THE PROPERTY OF CARRIER CORPORATION AND IS DELIVERED UPON THE EXPRESS CONDITION THAT THE CONTENTS WILL NOT BE DISCLOSED OR USED WITHOUT CARRIER CORPORATION'S WRITTEN CONSENT. | SUBMISSION OF THESE DRAWINGS OR DOCUMENTS DOES NOT CONSTITUTE PART PERFORMANCE OR ACCEPTANCE OF CONTRACT.

UNIT	OUTDOOR COIL TYPE	STD. UNIT WEIGHT ***		CORNER WEIGHT (A)		CORNER WEIGHT (B)		CORNER WEIGHT (C)		CORNER WEIGHT (D)		C.G.		
		LBS.	KG.	LBS.	KG.	LBS.	KG.	LBS.	KG.	LBS.	KG.	X	Y	Z
48FE-M08	RTPF	787	357	181	82	150	68	207	94	249	113	40 [1016]	34 1/2 [876]	19 3/8 [492]
48FE-M09	RTPF	868	394	197	89	160	73	229	104	282	128	39 1/2 [1003]	35 [889]	18 5/8 [473]
48FE-M12	RTPF	878	398	213	97	175	80	221	100	268	121	39 7/8 [1013]	33 1/4 [841]	18 1/2 [470]

RTPF - ROUND TUBE, PLATE FIN (COPPER/ALUM)

*** STANDARD UNIT WEIGHT IS WITH LOW GAS HEAT AND WITHOUT PACKAGING.
FOR OTHER OPTIONS AND ACCESSORIES, REFER TO THE PRODUCT DATA CATALOG.

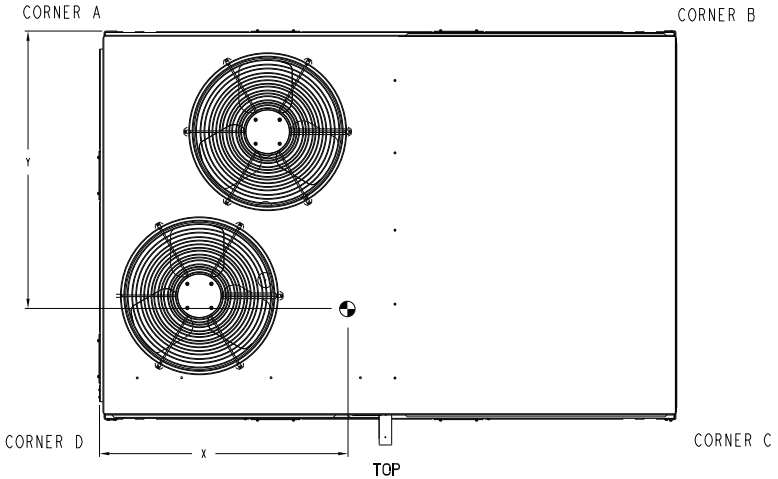

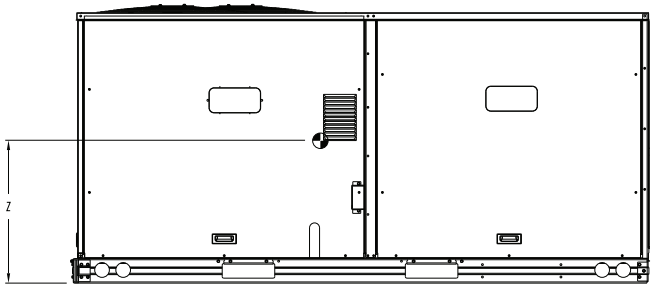

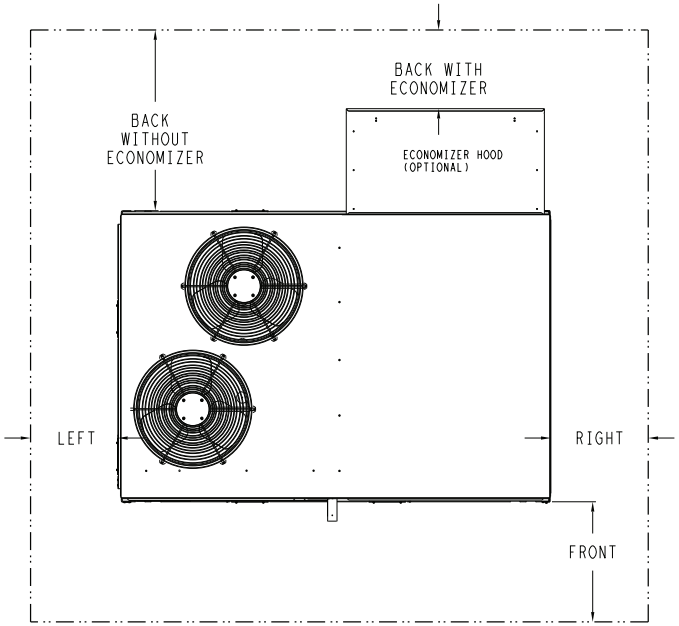

NOTE:

1. FOR ALL MINIMUM CLEARANCES LOCAL CODES OR JURISDICTIONS MAY PREVAIL.

CLEARANCE			
	SERVICE WITH:	SERVICE WITH:	OPERATING
SURFACE	CONDUCTIVE BARRIER	NONCONDUCTIVE BARRIER	CLEARANCE
FRONT	48 [1219mm]	36 [914mm]	18 [457mm]
LEFT	48 [1219mm]	42 [1067mm]	18 [457mm]
BACK W/O ECON	48 [1219mm]	42 [1067mm]	18 [457mm]
BACK W/ECON	36 [914mm]	36 [914mm]	18 [457mm]
RIGHT	36 [914mm]	36 [914mm]	18 [457mm]
TOP	72 [1829mm]	72 [1829mm]	72 [1829mm]

ITC CLASSIFICATION	SHEET	DATE	SUPERCEDES			REV
U.S. ECCN:NSR	2 OF 3	8/8/23	-	48FE 08-12 SINGLE ZONE ELECTRICAL COOLING WITH GAS HEAT	48TM009320	-

48FE**08-12 Base Unit Dimensions (cont)

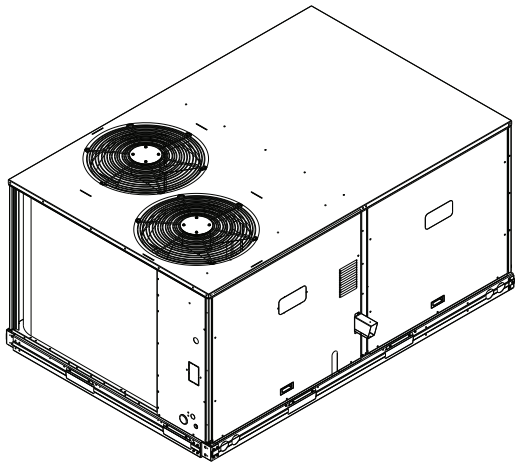

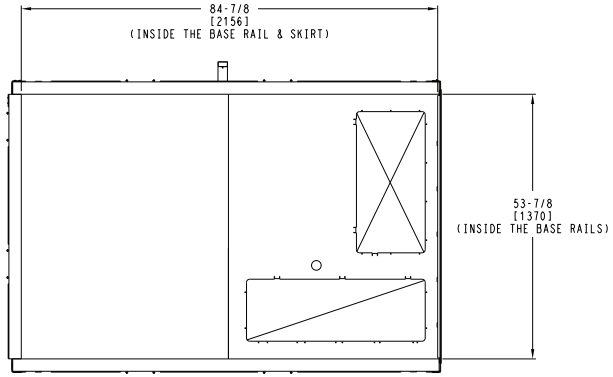

INSIDE BASERAIL DIMENSIONS

BOTTOM

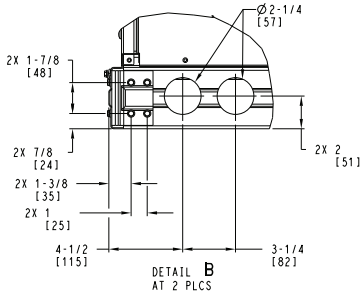

DETAIL B
AT 2 PLCS

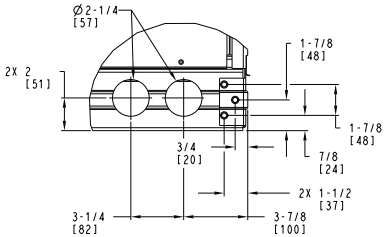

DETAIL C
AT 2 PLCS

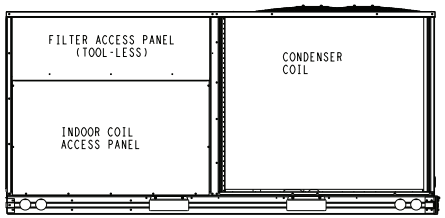

BACK

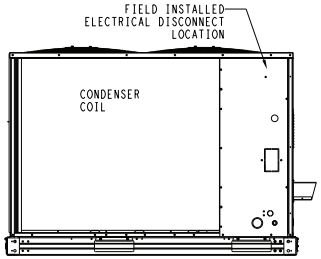

LEFT

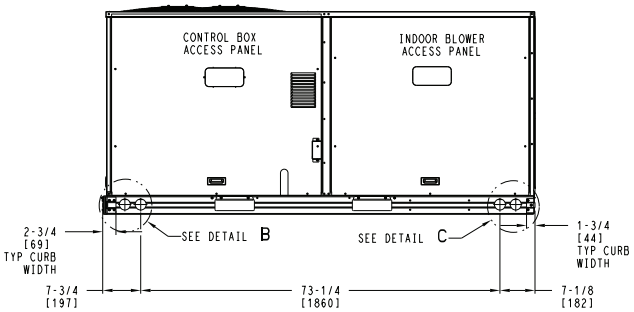

FRONT

ITC CLASSIFICATION	SHEET	DATE	SUPERCEDES			REV
U.S. ECCN: NSR	3 OF 3	8/8/23	-	48FE 08-12 SINGLE ZONE ELECTRICAL COOLING WITH GAS HEAT	48TM009320	-

48FE**14 Base Unit Dimensions

NOTES:

1. DIMENSIONS ARE IN INCHES, DIMENSIONS IN [ ] ARE IN MILLIMETERS.
2. ◯ CENTER OF GRAVITY
3. DIRECTION OF AIR FLOW
4. ALL VIEW DRAWN USING 3RD ANGLE

UNIT	OUTDOOR COIL TYPE	H
48FE-M14	RTPF	15 7/8 [403]
RTPF - ROUND TUBE, PLATE FIN (COPPER/ALUM)		

THIS DOCUMENT IS THE PROPERTY OF CARRIER CORPORATION AND IS DELIVERED UPON THE EXPRESS CONDITION THAT THE CONTENTS WILL NOT BE DISCLOSED OR USED WITHOUT CARRIER CORPORATION'S WRITTEN CONSENT.

SUBMISSION OF THESE DRAWINGS OR DOCUMENTS DOES NOT CONSTITUTE PART PERFORMANCE OR ACCEPTANCE OF CONTRACT.

	CONNECTION SIZES
A	1 3/8" [35] DIA FIELD POWER SUPPLY HOLE
B	2 1/2" [64] DIA POWER SUPPLY KNOCKOUT
C	1 3/4" [51] DIA GAUGE ACCESS PLUG
D	7/8" [22] DIA FIELD CONTROL WIRING HOLE
E	3/4"-14 NPT CONDENSATE DRAIN
F	3/4"-14 NPT GAS CONNECTION
G	2" [51] DIA POWER SUPPLY KNOCK-OUT

THRU-THE-BASE CHART
THESE HOLES REQUIRED FOR USE
CRBTMPWR002A01,004A01

	THREADED CONDUIT SIZE	WIRE USE	REQ'D HOLE SIZES (MAX.)
W	1/2"	ACC.	7/8" [22.2]
X	1/2"	24V	7/8" [22.2]
Y	1 1/4" (002,004)	POWER	1 3/4" [44.4]
Z*	(004) 3/4" FPT	GAS	1 5/8" [41.3]
	FOR "THRU-THE-BASEPAN" FACTORY OPTION, FITTINGS FOR ONLY X, Y, & Z ARE PROVIDED		
*	(002) PROVIDES 3/4" FPT THRU CURB FLANGE & FITTING.		

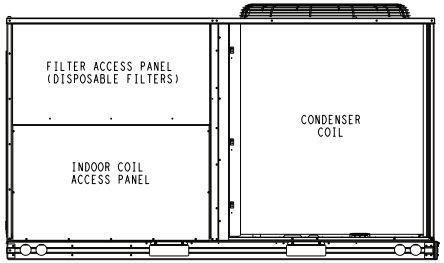

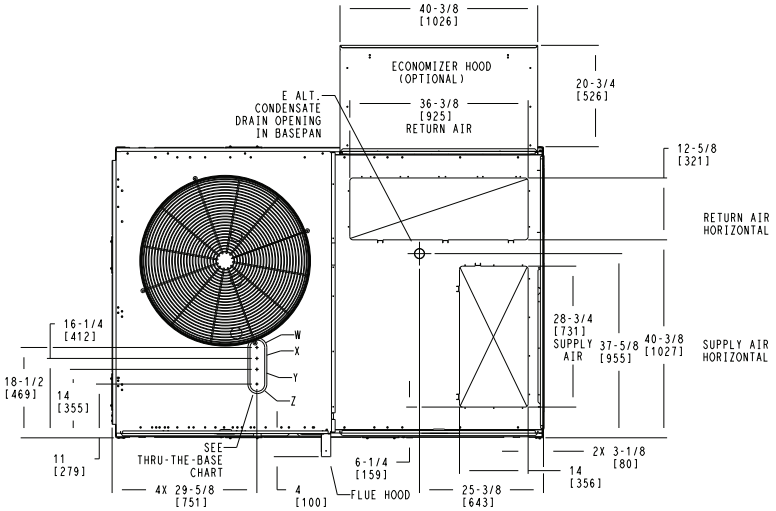

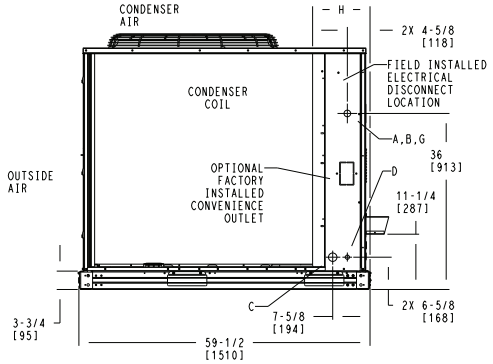

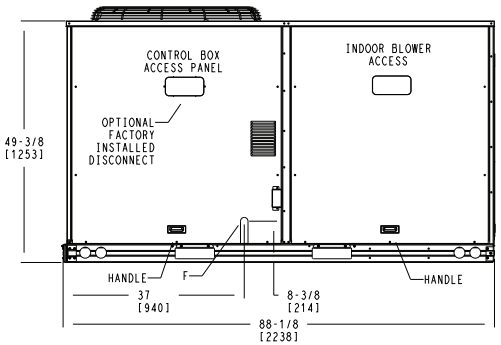

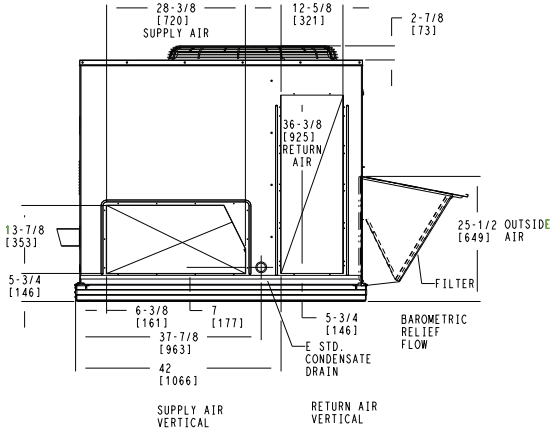

ITC CLASSIFICATION	SHEET	DATE	SUPERCEDES			REV
U.S. ECCN:NSR	1 OF 3	08/02/24	-	48FE-14 SINGLE ZONE ELECTRICAL COOLING WITH GAS HEAT	48TM009978	-

48FE**14 Base Unit Dimensions (cont)

UNIT	OUTDOOR COIL TYPE	STD. UNIT WEIGHT***		CORNER WEIGHT (A)		CORNER WEIGHT (B)		CORNER WEIGHT (C)		CORNER WEIGHT (D)		C.G.		
		LBS.	KG.	LBS.	KG.	LBS.	KG.	LBS.	KG.	LBS.	KG.	X	Y	Z
48FE-M14	RTPF	1041	472	243	110	195	88	269	122	335	152	39 1/4 [997]	34 1/2 [876]	21 7/8 [556]
RTPF - ROUND TUBE, PLATE FIN (COPPER/ALUM)														

*** STANDARD UNIT WEIGHT IS WITH LOW GAS HEAT AND WITHOUT PACKAGING.
FOR OTHER OPTIONS AND ACCESSORIES, REFER TO THE PRODUCT DATA CATALOG.

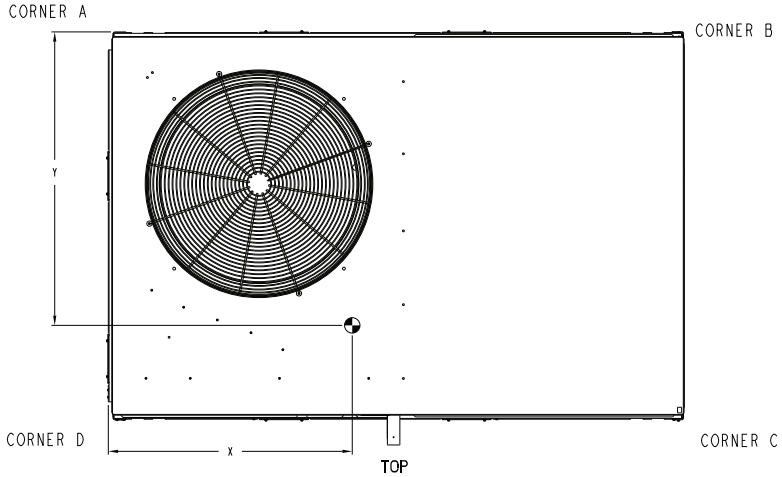

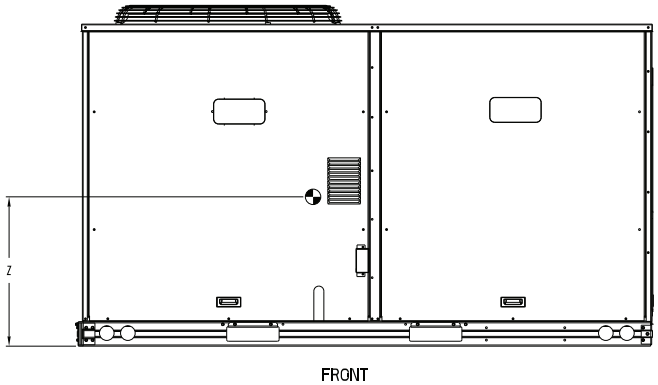

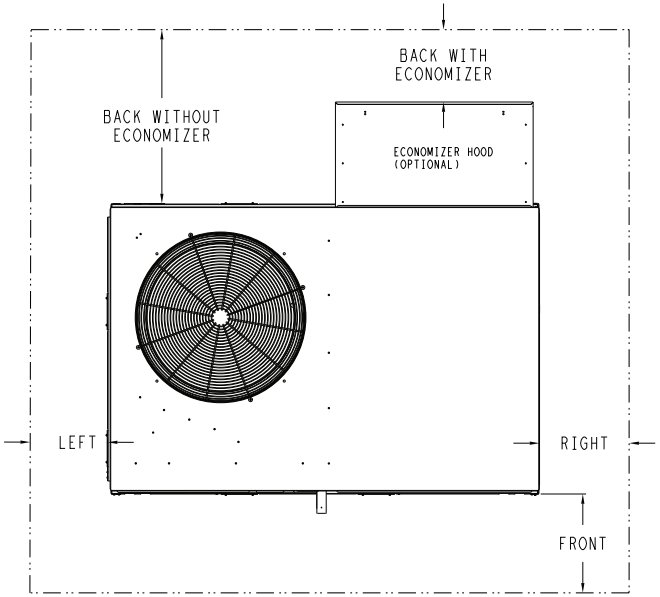

NOTE:

1. FOR ALL MINIMUM CLEARANCES LOCAL CODES OR JURISDICTIONS MAY PREVAIL.

CLEARANCE			
	SERVICE WITH:	SERVICE WITH:	OPERATING
SURFACE	CONDUCTIVE BARRIER	NONCONDUCTIVE BARRIER	CLEARANCE
FRONT	48 [1219mm]	36 [914mm]	18 [457mm]
LEFT	48 [1219mm]	42 [1067mm]	18 [457mm]
BACK W/O ECON	48 [1219mm]	42 [1067mm]	18 [457mm]
BACK W/ECON	36 [914mm]	36 [914mm]	18 [457mm]
RIGHT	36 [914mm]	36 [914mm]	18 [457mm]
TOP	72 [1829mm]	72 [1829mm]	72 [1829mm]

Carrier
THIS DOCUMENT IS THE PROPERTY OF CARRIER CORPORATION AND IS DELIVERED UPON THE EXPRESS CONDITION THAT THE CONTENTS WILL NOT BE DISCLOSED OR USED WITHOUT CARRIER CORPORATION'S WRITTEN CONSENT.
SUBMISSION OF THESE DRAWINGS OR DOCUMENTS DOES NOT CONSTITUTE PART PERFORMANCE OR ACCEPTANCE OF CONTRACT.

ITC CLASSIFICATION	SHEET	DATE	SUPERCEDES			REV
U.S. ECCN:NSR	2 OF 3	08/02/24	-	48FE-14 SINGLE ZONE ELECTRICAL COOLING WITH GAS HEAT	48TM009978	-

48FE**14 Base Unit Dimensions (cont)

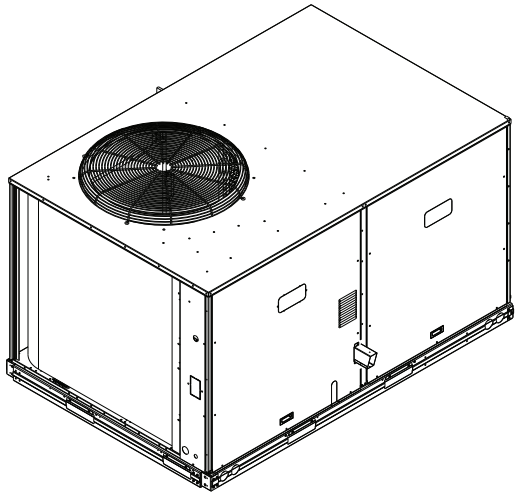

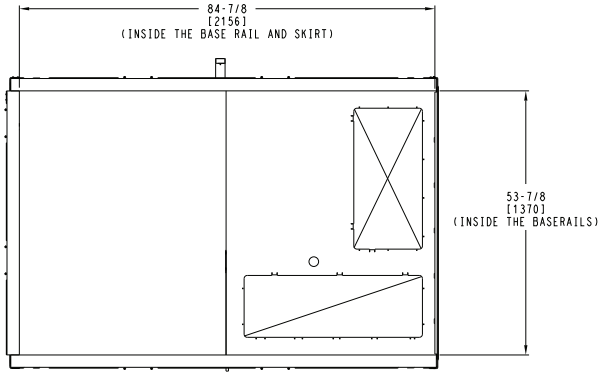

INSIDE BASERAIL DIMENSIONS
BOTTOM

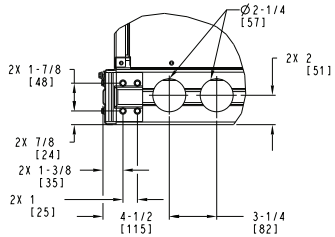

DETAIL B
AT 2 PLCS

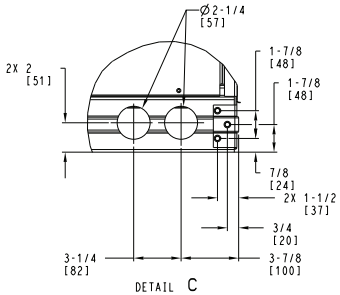

DETAIL C
AT 2 PLCS

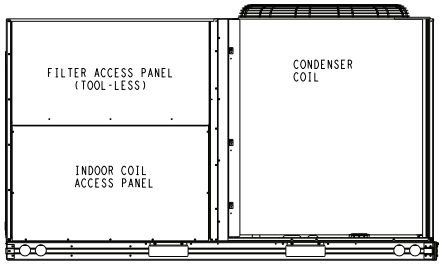

BACK

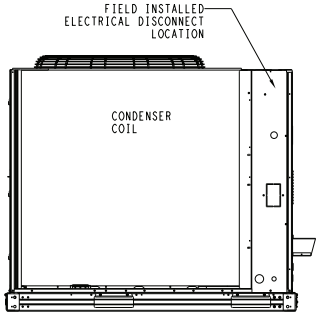

LEFT

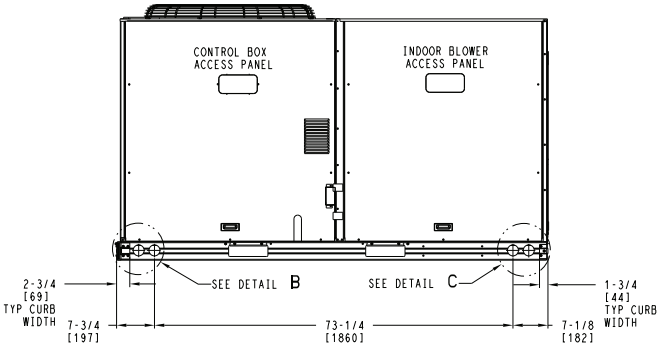

FRONT

ITC CLASSIFICATION	SHEET	DATE	SUPERCEDES			REV
U.S. ECCN:NSR	3 OF 3	08/02/24	-	48FE-14 SINGLE ZONE ELECTRICAL COOLING WITH GAS HEAT	48TM009978	-

48FE**16 Base Unit Dimensions

NOTES:

1. DIMENSIONS ARE IN INCHES, DIMENSIONS IN [ ] ARE IN MILLIMETERS.
2. CENTER OF GRAVITY
3. DIRECTION OF AIR FLOW

Carrier | THIS DOCUMENT IS THE PROPERTY OF CARRIER CORPORATION AND IS DELIVERED UPON THE EXPRESS CONDITION THAT THE CONTENTS WILL NOT BE DISCLOSED OR USED WITHOUT CARRIER CORPORATION'S WRITTEN CONSENT. | SUBMISSION OF THESE DRAWINGS OR DOCUMENTS DOES NOT CONSTITUTE PART PERFORMANCE OR ACCEPTANCE OF CONTRACT.

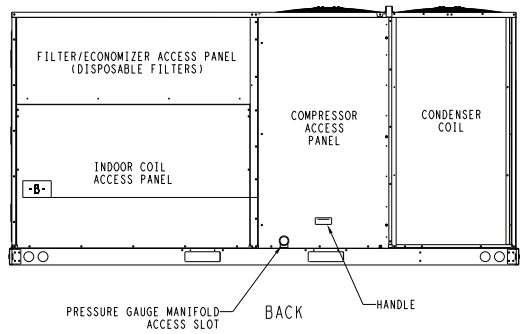

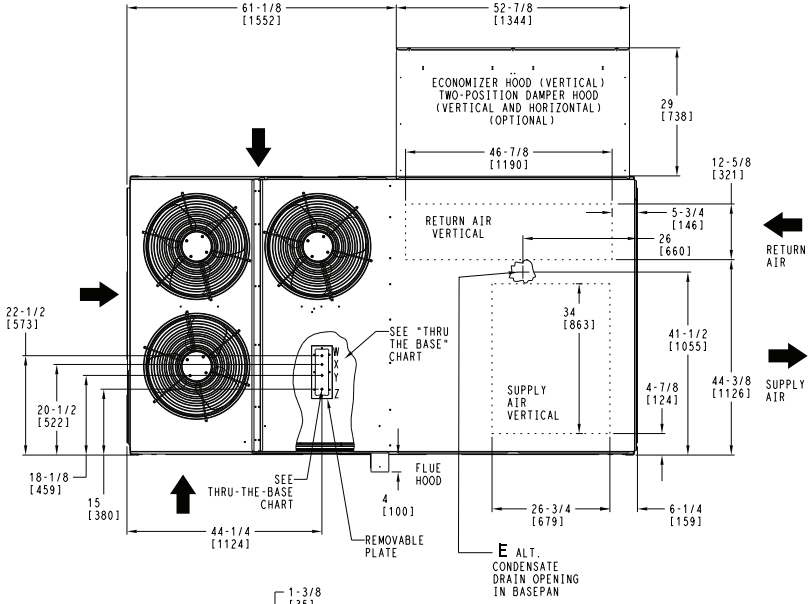

	CONNECTION SIZES
B	2 1/2" [64] DIA POWER SUPPLY HOLE
D	7/8" [22] DIA FIELD CONTROL WIRING HOLE
E	3/4"-14 NPT CONDENSATE DRAIN
F	7/8" [22] DIA FIELD CONVENIENCE OUTLET HOLE
G	3/4"-14 NPT GAS CONNECTION

THRU-THE-BASE CHART
THESE HOLES REQUIRED FOR USE
CRBTMPWR005A00,006A00,007A00

ACCESSORY NO.		THREADED CONDUIT SIZE	WIRE USE	REQ'D HOLE SIZES (MAX.)
005	W	1/2"	ACC.	7/8" [22.2]
	X	1/2"	24V	7/8" [22.2]
	Y	1 1/4"	POWER	1 1/2" [38.1]
	Z	3/4" PIPE	GAS	1 3/4" [44.5]
006	W	1/2"	ACC.	7/8" [22.2]
	X	1/2"	24V	7/8" [22.2]
	Y	1 1/2"	POWER	2" [50.8]
	Z	3/4" PIPE	GAS	1 3/4" [44.5]
007	W	1/2"	ACC.	7/8" [22.2]
	X	1/2"	24V	7/8" [22.2]
	Y	2"	POWER	2 1/2" [63.5]
	Z	3/4" PIPE	GAS	1 3/4" [44.5]
	FOR "THRU-THE-BASEPAN" FACTORY OPTION, FITTINGS FOR X & Y ARE PROVIDED AS SPECIFIED ON "006".			

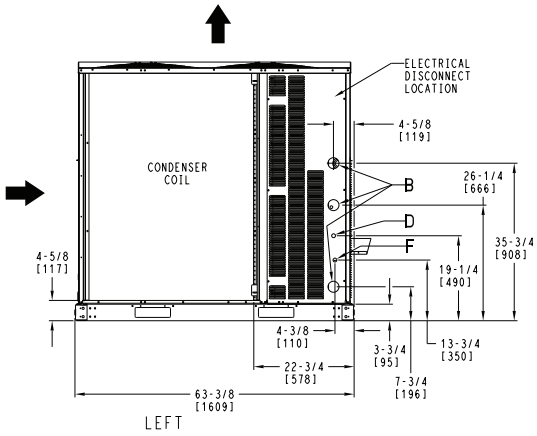

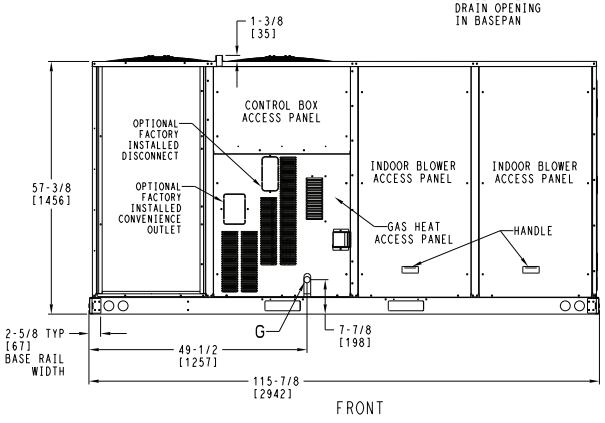

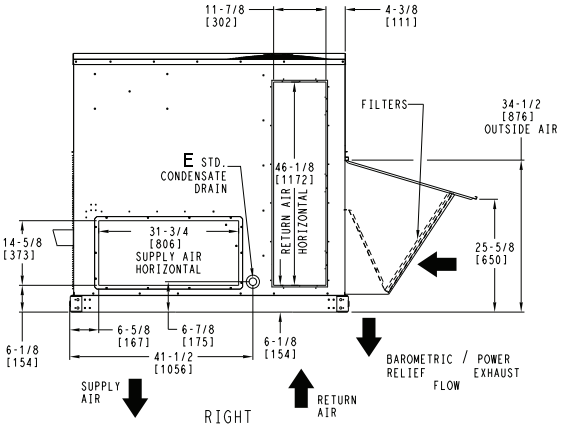

ITC CLASSIFICATION	SHEET	DATE	SUPERCEDES			REV
U.S. ECCN:NSR	1 OF 2	8/10/23	-	48FE 16 SINGLE ZONE ELECTRICAL COOLING WITH GAS HEAT	50TM003162	-

48FE**16 Base Unit Dimensions (cont)

UNIT	STD UNIT WEIGHT		CORNER WEIGHT (A)		CORNER WEIGHT (B)		CORNER WEIGHT (C)		CORNER WEIGHT (D)		C.G.		
	LBS.	KG.	LBS.	KG.	LBS.	KG.	LBS.	KG.	LBS.	KG.	X	Y	Z
48FE-M16	1408	639	373	169	341	155	332	150	362	164	55 3/8 [1407]	31 1/4 [794]	21 1/8 [537]

STANDARD UNIT WEIGHT IS WITH LOW HEAT & WITHOUT PACKAGING.
FOR OPTIONS & ACCESSORIES, REFER TO THE PRODUCT DATA CATALOG.

Carrier | THIS DOCUMENT IS THE PROPERTY OF CARRIER CORPORATION AND IS DELIVERED UPON THE EXPRESS CONDITION THAT THE CONTENTS WILL NOT BE DISCLOSED OR USED WITHOUT CARRIER CORPORATION'S WRITTEN CONSENT. | SUBMISSION OF THESE DRAWINGS OR DOCUMENTS DOES NOT CONSTITUTE PART PERFORMANCE OR ACCEPTANCE OF CONTRACT.

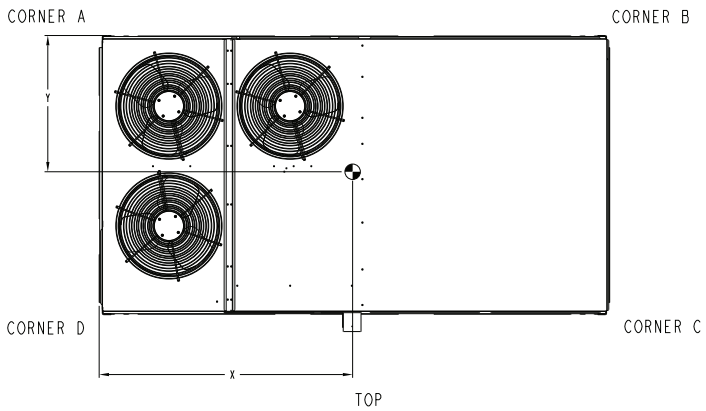

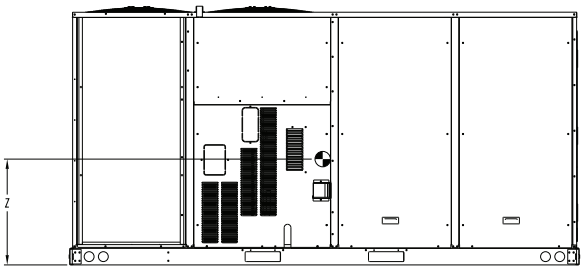

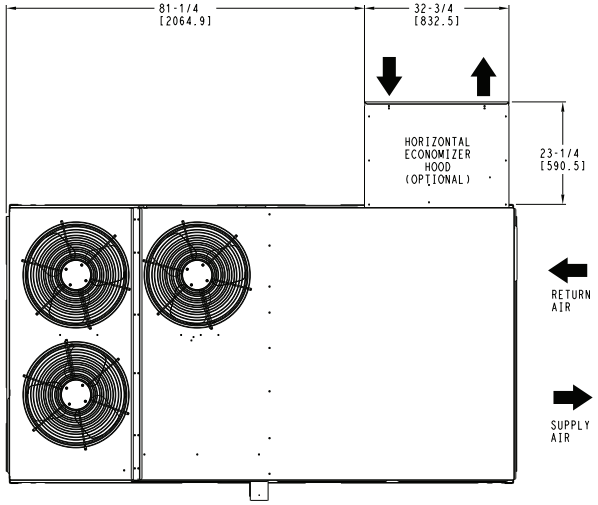

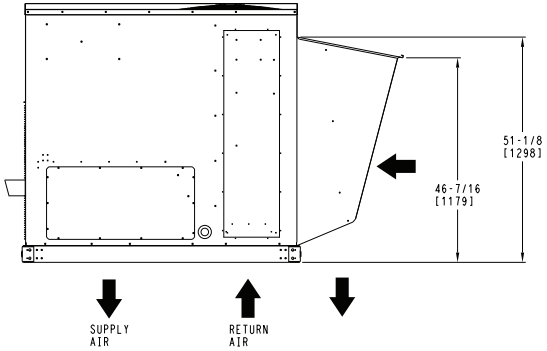

HORIZONTAL ECONOMIZER

ITC CLASSIFICATION	SHEET	DATE	SUPERCEDES			REV
U.S. ECCN:NSR	2 OF 2	8/10/23	-	48FE 16 SINGLE ZONE ELECTRICAL COOLING WITH GAS HEAT	50TM003162	-

48FE**16 Base Unit Dimensions — Clearances

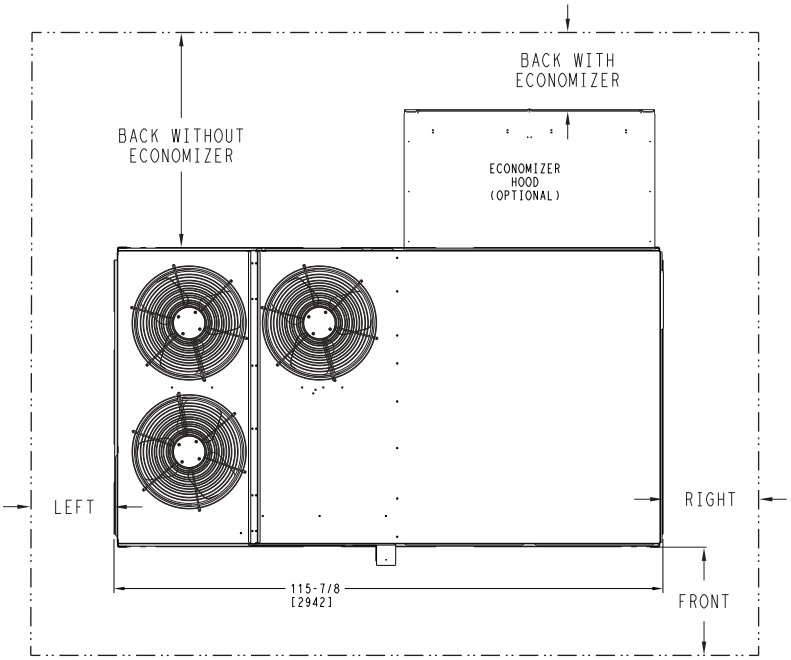

CLEARANCE[a,b]			
SURFACE	**Service with Conductive Barrier**	**Service with Non-conductive Barrier**	**Operating Clearance**
FRONT	48 in. (1219 mm)	36 in. (914 mm)	18 in. (457 mm)
LEFT	48 in. (1219 mm)	42 in. (1067 mm)	18 in. (457 mm)
BACK W/O ECONOMIZER	48 in. (1219 mm)	42 in. (1067 mm)	18 in. (457 mm)
BACK W/ ECONOMIZER	36 in. (914 mm)	36 in. (914 mm)	18 in. (457 mm)
RIGHT	36 in. (914 mm)	36 in. (914 mm)	18 in. (457 mm)
LEFT	72 in. (1829 mm)	72 in. (1829 mm)	72 in. (1829 mm)

NOTE(S):

a. For all minimum clearances local codes or jurisdictions may prevail.
b. See page 20 for 48FE 08-12 clearances, See page 23 for 48FE 14 clearances.

50FE-*08*12 Base Unit Dimensions

NOTES:

1. DIMENSIONS ARE IN INCHES, DIMENSIONS IN [ ] ARE IN MILLIMETERS.
2. CENTER OF GRAVITY
3. DIRECTION OF AIR FLOW
4. ALL VIEW DRAWN USING 3RD ANGLE

UNIT	OUTDOOR COIL TYPE	J	K	H
50FE-M08	RTPF	41 1/4 [1048]	33 3/4 [857]	15 7/8 [403]
50FE-M09	RTPF	49 3/8 [1253]	36 3/8 [925]	15 7/8 [403]
50FE-M12	RTPF	49 3/8 [1253]	36 3/8 [925]	15 7/8 [403]
RTPF - ROUND TUBE, PLATE FIN (COPPER/ALUM)				

Carrier THIS DOCUMENT IS THE PROPERTY OF CARRIER CORPORATION AND IS DELIVERED UPON THE EXPRESS CONDITION THAT THE CONTENTS WILL NOT BE DISCLOSED OR USED WITHOUT CARRIER CORPORATION'S WRITTEN CONSENT. SUBMISSION OF THESE DRAWINGS OR DOCUMENTS DOES NOT CONSTITUTE PART PERFORMANCE OR ACCEPTANCE OF CONTRACT.

CONNECTION SIZES	
A	1 3/8" [35] DIA FIELD POWER SUPPLY HOLE
B	2 1/2" [64] DIA POWER SUPPLY KNOCKOUT
C	1 3/4" [51] DIA GAUGE ACCESS PLUG
D	7/8" [22] DIA FIELD CONTROL WIRING HOLE
E	3/4"-14 NPT CONDENSATE DRAIN
G	2 " [51] DIA POWER SUPPLY KNOCK-OUT

THRU-THE-BASE CHART (FIELD INST)

THESE HOLES REQUIRED FOR USE WITH ACCY KITS: CRBTMPWR002A01

	THREADED CONDUIT SIZE	WIRE USE	REQ'D HOLE SIZES (MAX.)
W	1/2"	ACC.	7/8" [22.2]
X	1/2"	24V	7/8" [22.2]
Y	1 1/4" (002)	POWER	1 3/4" [44.4]

THRU-THE-BASE CHART (FIOP)

FOR "THRU-THE-BASEPAN" FACTORY OPTION, FITTINGS FOR ONLY X & Y ARE PROVIDED: (1) 1/2" & (1) 1 1/4" ELECTRICAL FITTINGS.

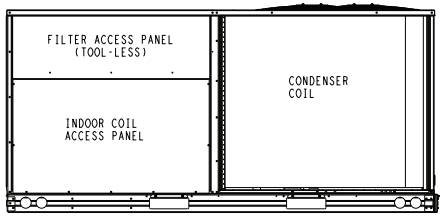

BACK

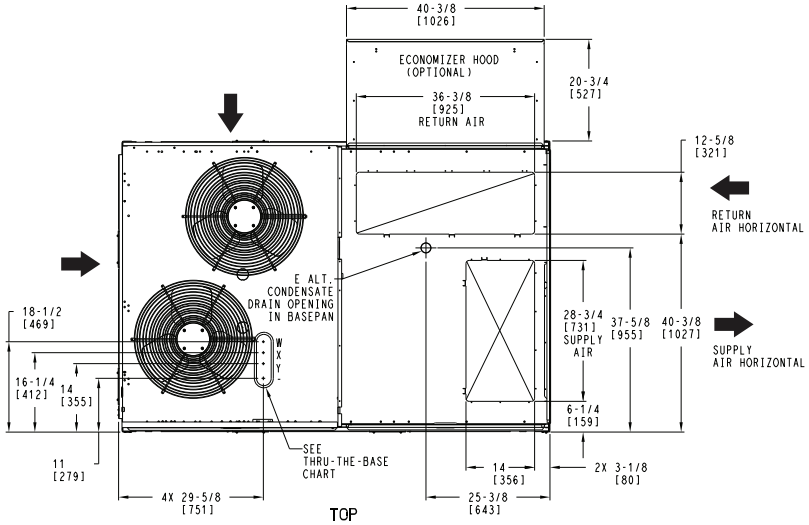

TOP

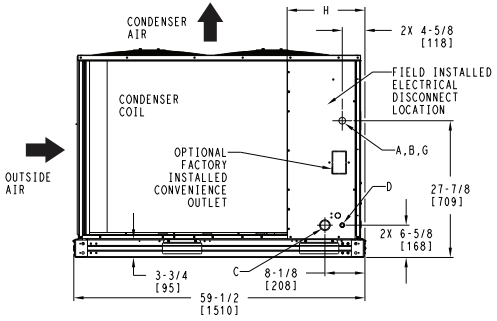

LEFT

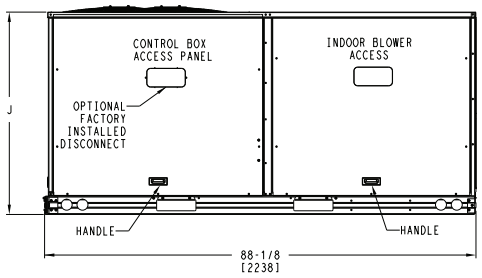

FRONT

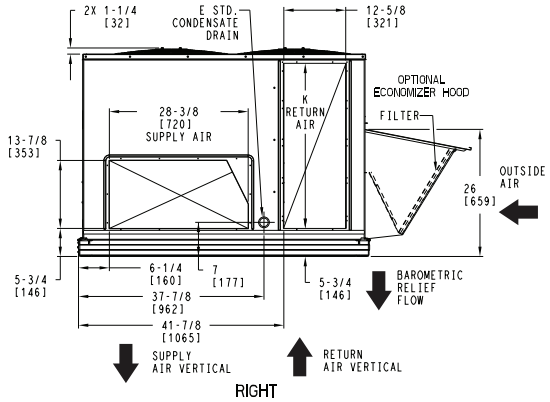

RIGHT

ITC CLASSIFICATION	SHEET	DATE	SUPERCEDES			REV
U.S. ECCN:NSR	1 OF 3	8/8/23	-	50FE 08-12 SINGLE ZONE ELECTRICAL COOLING WITH ELECTRIC HEAT	48TM009323	-

50FE-*08-12 Base Unit Dimensions (cont)

Carrier | THIS DOCUMENT IS THE PROPERTY OF CARRIER CORPORATION AND IS DELIVERED UPON THE EXPRESS CONDITION THAT THE CONTENTS WILL NOT BE DISCLOSED OR USED WITHOUT CARRIER CORPORATION'S WRITTEN CONSENT. | SUBMISSION OF THESE DRAWINGS OR DOCUMENTS DOES NOT CONSTITUTE PART PERFORMANCE OR ACCEPTANCE OF CONTRACT.

UNIT	OUTDOOR COIL TYPE	STD. UNIT WEIGHT ***		CORNER WEIGHT (A)		CORNER WEIGHT (B)		CORNER WEIGHT (C)		CORNER WEIGHT (D)		C.G.		
		LBS.	KG.	LBS.	KG.	LBS.	KG.	LBS.	KG.	LBS.	KG.	X	Y	Z
50FE-M08	RTPF	743	337	170	77	142	64	196	89	235	107	40 [1016]	34 1/2 [876]	20 [508]
50FE-M09	RTPF	805	365	201	91	157	71	196	89	251	114	38 5/8 [981]	33 [838]	19 1/8 [486]
50FE-M12	RTPF	815	370	204	92	159	72	198	90	254	115	38 5/8 [981]	33 [838]	19 1/8 [486]
RTPF - ROUND TUBE, PLATE FIN (COPPER/ALUM)														

*** STANDARD UNIT WEIGHT IS WITHOUT ELECTRIC HEAT AND WITHOUT PACKAGING.
FOR OTHER OPTIONS AND ACCESSORIES, REFER TO THE PRODUCT DATA CATALOG.

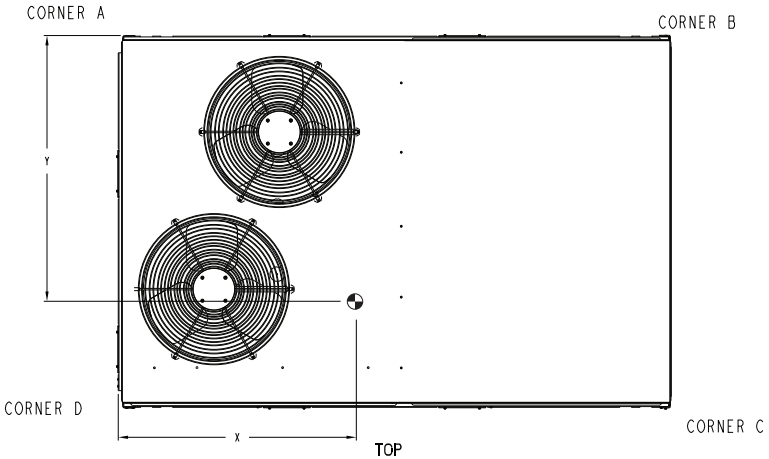

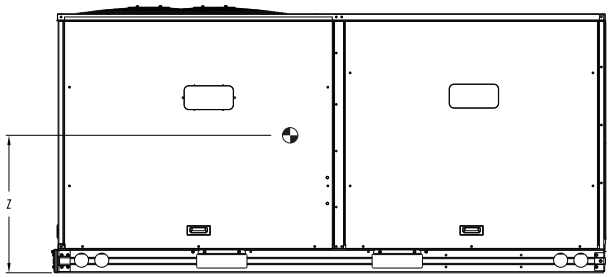

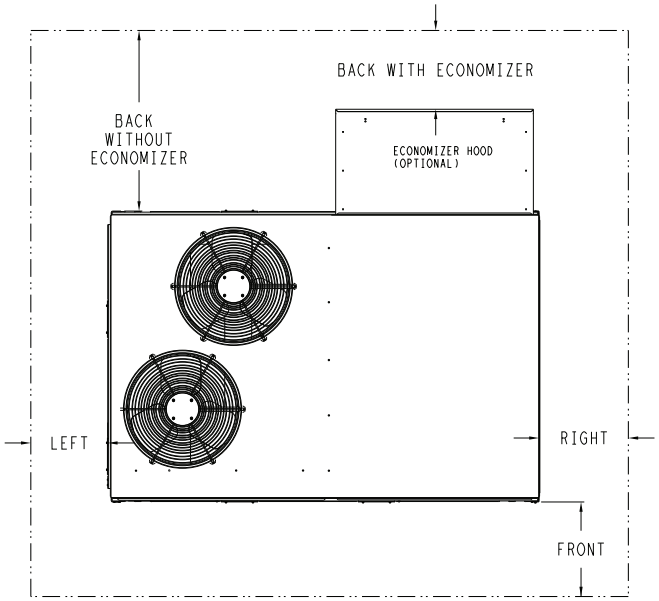

NOTE:

1. FOR ALL MINIMUM CLEARANCES LOCAL CODES OR JURISDICTIONS MAY PREVAIL.

CLEARANCE			
	SERVICE WITH:	SERVICE WITH:	OPERATING
SURFACE	CONDUCTIVE BARRIER	NONCONDUCTIVE BARRIER	CLEARANCE
FRONT	48 [1219mm]	36 [914mm]	18 [457mm]
LEFT	48 [1219mm]	42 [1067mm]	18 [457mm]
BACK W/O ECON	48 [1219mm]	42 [1067mm]	18 [457mm]
BACK W/ECON	36 [914mm]	36 [914mm]	18 [457mm]
RIGHT	36 [914mm]	36 [914mm]	18 [457mm]
TOP	72 [1829mm]	72 [1829mm]	72 [1829mm]

ITC CLASSIFICATION	SHEET	DATE	SUPERCEDES			REV
U.S. ECCN:NSR	2 OF 3	8/8/23	-	50FE 08-12 SINGLE ZONE ELECTRICAL COOLING WITH ELECTRIC HEAT	48TM009323	-

50FE-*08-12 Base Unit Dimensions (cont)

Carrier | THIS DOCUMENT IS THE PROPERTY OF CARRIER CORPORATION AND IS DELIVERED UPON THE EXPRESS CONDITION THAT THE CONTENTS WILL NOT BE DISCLOSED OR USED WITHOUT CARRIER CORPORATION'S WRITTEN CONSENT. | SUBMISSION OF THESE DRAWINGS OR DOCUMENTS DOES NOT CONSTITUTE PART PERFORMANCE OR ACCEPTANCE OF CONTRACT.

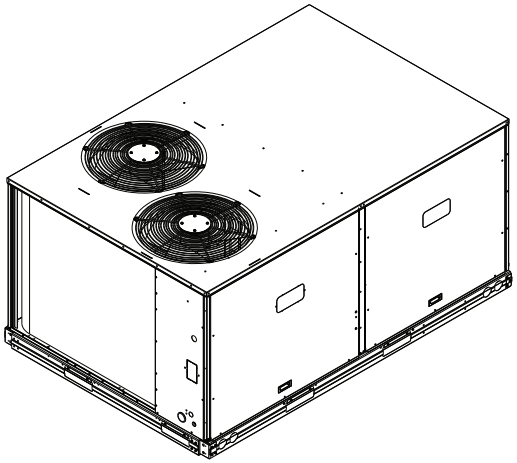

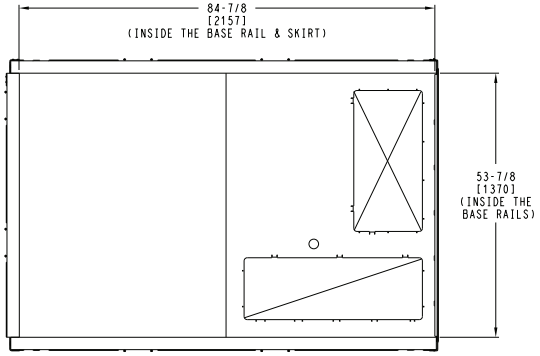

INSIDE BASERAIL DIMENSIONS

BOTTOM

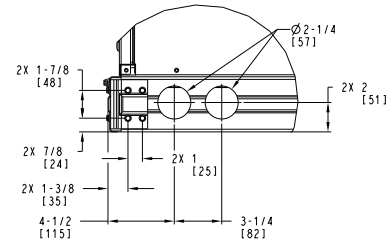

DETAIL B
AT 2 PLCS

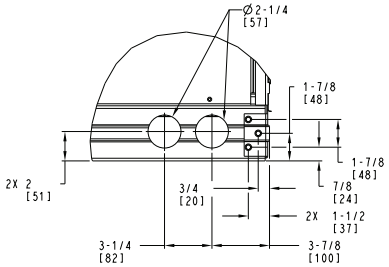

DETAIL C
AT 2 PLCS

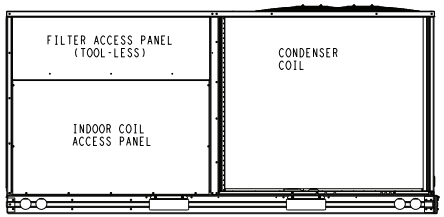

BACK

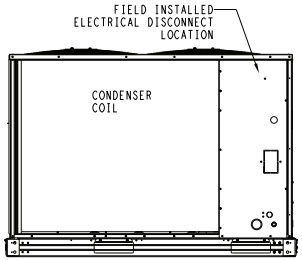

LEFT

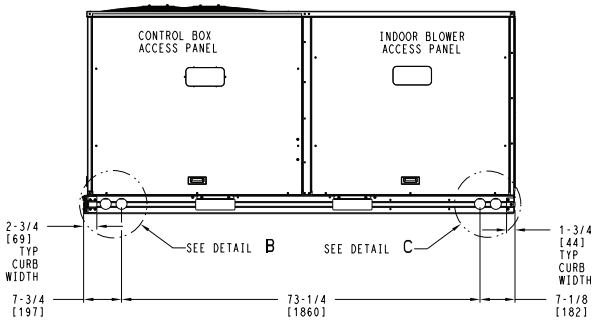

FRONT

ITC CLASSIFICATION	SHEET	DATE	SUPERCEDES			REV
U.S. ECCN:NSR	3 OF 3	8/8/23	-	50FE 08-12 SINGLE ZONE ELECTRICAL COOLING WITH ELECTRIC HEAT	48TM009323	-

50FE-*14 Base Unit Dimensions

NOTES:

1. DIMENSIONS ARE IN INCHES, DIMENSIONS IN [ ] ARE IN MILLIMETERS.
2. CENTER OF GRAVITY
3. DIRECTION OF AIR FLOW
4. ALL VIEW DRAWN USING 3RD ANGLE

Carrier
THIS DOCUMENT IS THE PROPERTY OF CARRIER CORPORATION AND IS DELIVERED UPON THE EXPRESS CONDITION THAT THE CONTENTS WILL NOT BE DISCLOSED OR USED WITHOUT CARRIER CORPORATION'S WRITTEN CONSENT.
SUBMISSION OF THESE DRAWINGS OR DOCUMENTS DOES NOT CONSTITUTE PART PERFORMANCE OR ACCEPTANCE OF CONTRACT.

UNIT	OUTDOOR COIL TYPE	H
50FE-M14	RTPF	15 7/8 [403]
RTPF - ROUND TUBE, PLATE FIN (COPPER/ALUM)		

	CONNECTION SIZES
A	1 3/8" [35] DIA FIELD POWER SUPPLY HOLE
B	2 1/2" [64] DIA POWER SUPPLY KNOCKOUT
C	1 3/4" [51] DIA GAUGE ACCESS PLUG
D	7/8" [22] DIA FIELD CONTROL WIRING HOLE
E	3/4"-14 NPT CONDENSATE DRAIN
G	2" [51] DIA POWER SUPPLY KNOCK-OUT

THRU-THE-BASE CHART THESE HOLES REQUIRED FOR USE CRBTMPWR002A01			
	THREADED CONDUIT SIZE	WIRE USE	REQ'D HOLE SIZES (MAX.)
W	1/2"	ACC.	7/8" [22.2]
X	1/2"	24V	7/8" [22.2]
Y	1 1/4" (002)	POWER	1 3/4" [44.4]
	FOR "THRU-THE-BASEPAN" FACTORY OPTION, FITTINGS FOR ONLY X & Y ARE PROVIDED		

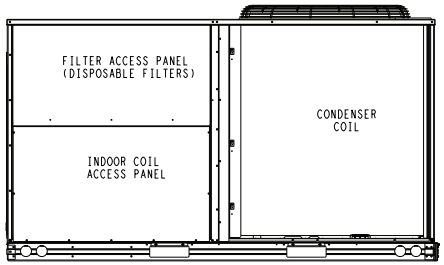

BACK

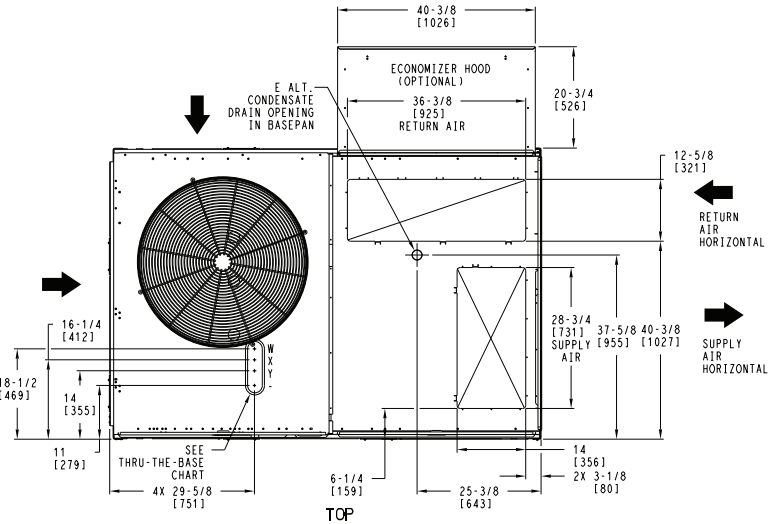

TOP

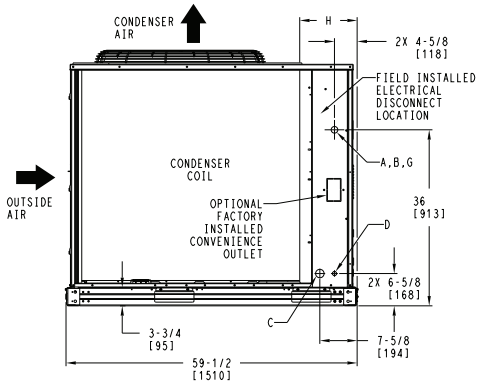

LEFT

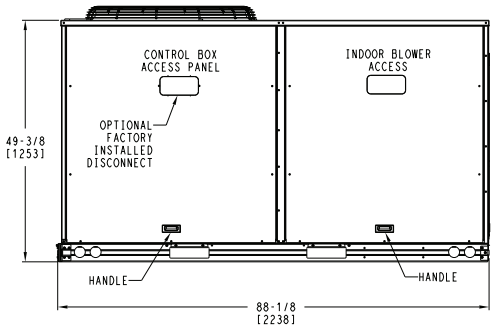

FRONT

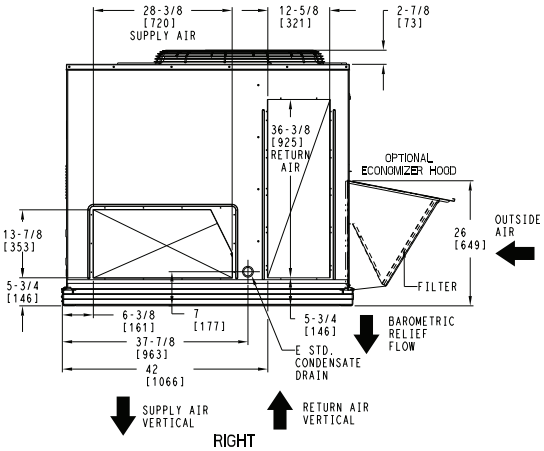

RIGHT

ITC CLASSIFICATION	SHEET	DATE	SUPERCEDES			REV
U.S. ECCN:NSR	1 OF 3	08/02/24	-	50FE-14 SINGLE ZONE ELECTRICAL COOLING WITH ELECTRIC HEAT	48TM009981	-

50FE-*14 Base Unit Dimensions (cont)

UNIT	OUTDOOR COIL TYPE	STD. UNIT WEIGHT***		CORNER WEIGHT (A)		CORNER WEIGHT (B)		CORNER WEIGHT (C)		CORNER WEIGHT (D)		C.G.		
		LBS.	KG.	LBS.	KG.	LBS.	KG.	LBS.	KG.	LBS.	KG.	X	Y	Z
50FE-M14	RTPF	978	444	245	111	191	87	238	108	305	138	38 5/8 [981]	33 [838]	20 1/2 [521]
RTPF - ROUND TUBE, PLATE FIN (COPPER/ALUM)														

*** STANDARD UNIT WEIGHT IS WITHOUT ELECTRIC HEAT AND WITHOUT PACKAGING.
FOR OTHER OPTIONS AND ACCESSORIES, REFER TO THE PRODUCT DATA CATALOG.

Carrier | THIS DOCUMENT IS THE PROPERTY OF CARRIER CORPORATION AND IS DELIVERED UPON THE EXPRESS CONDITION THAT THE CONTENTS WILL NOT BE DISCLOSED OR USED WITHOUT CARRIER CORPORATION'S WRITTEN CONSENT. | SUBMISSION OF THESE DRAWINGS OR DOCUMENTS DOES NOT CONSTITUTE PART PERFORMANCE OR ACCEPTANCE OF CONTRACT.

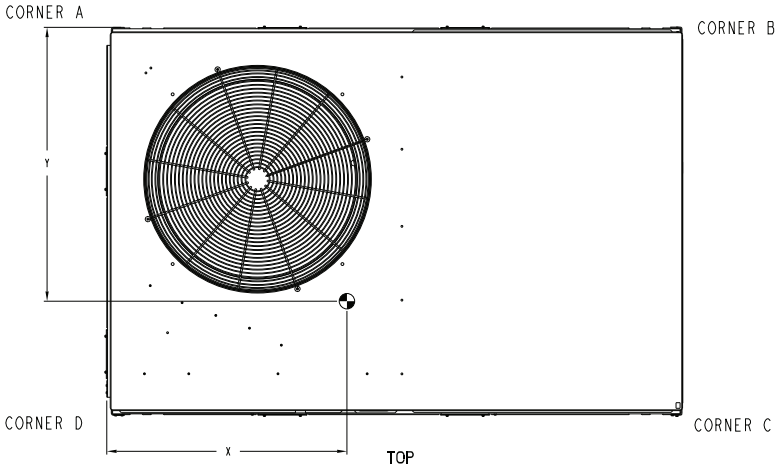

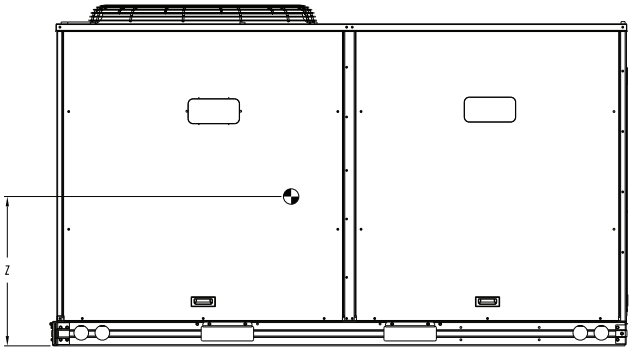

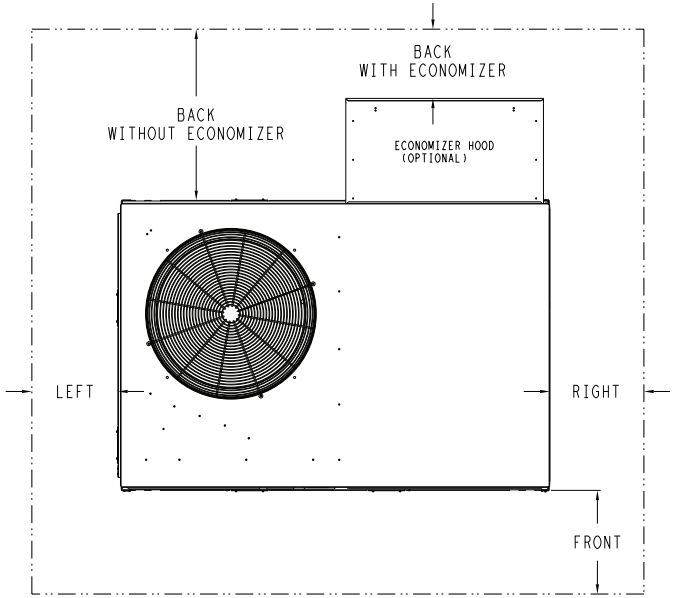

NOTE:

1. FOR ALL MINIMUM CLEARANCES LOCAL CODES OR JURISDICTIONS MAY PREVAIL.

CLEARANCE			
	SERVICE WITH:	SERVICE WITH:	OPERATING
SURFACE	CONDUCTIVE BARRIER	NONCONDUCTIVE BARRIER	CLEARANCE
FRONT	48 [1219mm]	36 [914mm]	18 [457mm]
LEFT	48 [1219mm]	42 [1067mm]	18 [457mm]
BACK W/O ECON	48 [1219mm]	42 [1067mm]	18 [457mm]
BACK W/ECON	36 [914mm]	36 [914mm]	18 [457mm]
RIGHT	36 [914mm]	36 [914mm]	18 [457mm]
TOP	72 [1829mm]	72 [1829mm]	72 [1829mm]

ITC CLASSIFICATION	SHEET	DATE	SUPERCEDES			REV
U.S. ECCN:NSR	2 OF 3	08/02/24	-	50FE-14 SINGLE ZONE ELECTRICAL COOLING WITH ELECTRIC HEAT	48TM009981	-

50FE-*14 Base Unit Dimensions (cont)

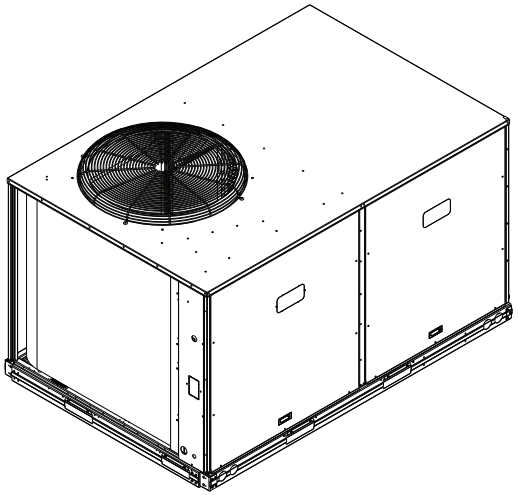

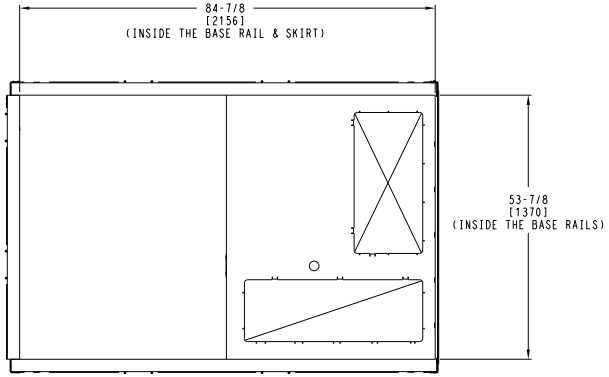

INSIDE BASERAIL DIMENSIONS
BOTTOM

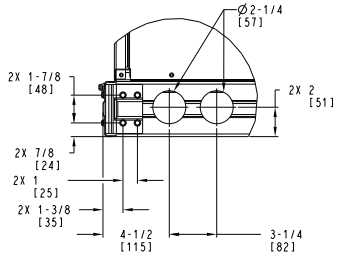

DETAIL B
TYP 2 PLCS

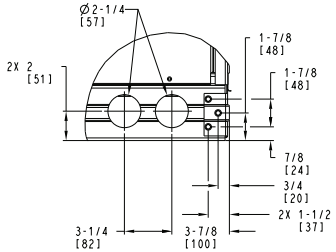

DETAIL C
TYP 2 PLCS

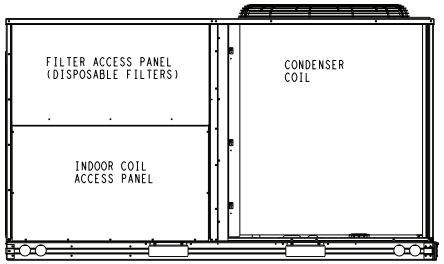

BACK

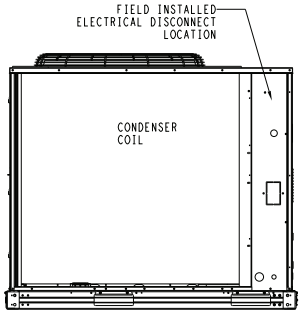

LEFT

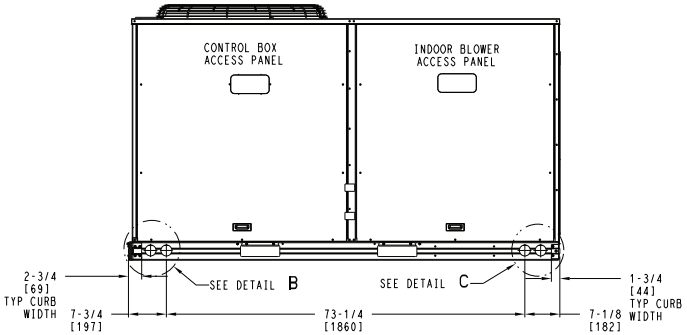

FRONT

ITC CLASSIFICATION	SHEET	DATE	SUPERCEDES			REV
U.S. ECCN:NSR	3 OF 3	08/02/24	-	50FE-14 SINGLE ZONE ELECTRICAL COOLING WITH ELECTRIC HEAT	48TM009981	-

Carrier
THIS DOCUMENT IS THE PROPERTY OF CARRIER CORPORATION AND IS DELIVERED UPON THE EXPRESS CONDITION THAT THE CONTENTS WILL NOT BE DISCLOSED OR USED WITHOUT CARRIER CORPORATION'S WRITTEN CONSENT.
SUBMISSION OF THESE DRAWINGS OR DOCUMENTS DOES NOT CONSTITUTE PART PERFORMANCE OR ACCEPTANCE OF CONTRACT.

Base unit dimensions (cont)

50FE-*16 Base Unit Dimensions

NOTES:

1. DIMENSIONS ARE IN INCHES, DIMENSIONS IN [ ] ARE IN MILLIMETERS.
2. CENTER OF GRAVITY
3. DIRECTION OF AIR FLOW

Carrier

THIS DOCUMENT IS THE PROPERTY OF CARRIER CORPORATION AND IS DELIVERED UPON THE EXPRESS CONDITION THAT THE CONTENTS WILL NOT BE DISCLOSED OR USED WITHOUT CARRIER CORPORATION'S WRITTEN CONSENT.

SUBMISSION OF THESE DRAWINGS OR DOCUMENTS DOES NOT CONSTITUTE PART PERFORMANCE OR ACCEPTANCE OF CONTRACT.

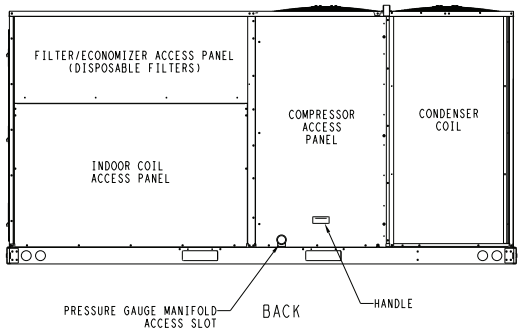

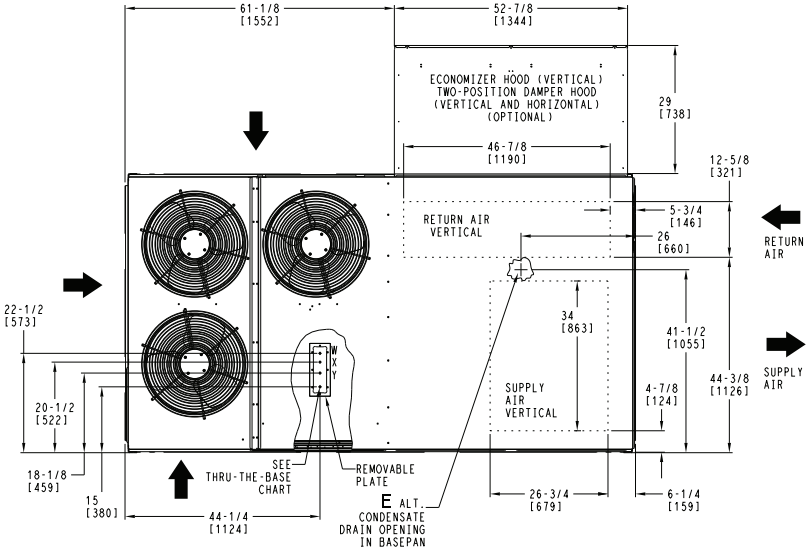

	CONNECTION SIZES
B	2 1/2" [64] DIA POWER SUPPLY HOLE
D	7/8" [22] DIA FIELD CONTROL WIRING HOLE
E	3/4"-14 NPT CONDENSATE DRAIN
F	7/8" [22] DIA FIELD CONVENIENCE OUTLET HOLE

THRU-THE-BASE CHART
THESE HOLES REQUIRED FOR USE
CRBTMPWR005A00,006A00,007A00

ACCESSORY NO.		THREADED CONDUIT SIZE	WIRE USE	REQ'D HOLE SIZES (MAX.)
005	W	1/2"	ACC.	7/8" [22.2]
	X	1/2"	24V	7/8" [22.2]
	Y	1 1/4"	POWER	1 1/2" [38.1]
006	W	1/2"	ACC.	7/8" [22.2]
	X	1/2"	24V	7/8" [22.2]
	Y	1 1/2"	POWER	2" [50.8]
007	W	1/2"	ACC.	7/8" [22.2]
	X	1/2"	24V	7/8" [22.2]
	Y	2"	POWER	2 1/2" [63.5]
	FOR "THRU-THE-BASEPAN" FACTORY OPTION, FITTINGS FOR X & Y ARE PROVIDED AS SPECIFIED ON "006".			

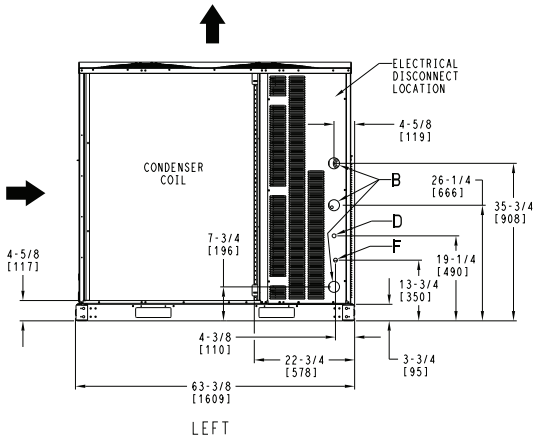

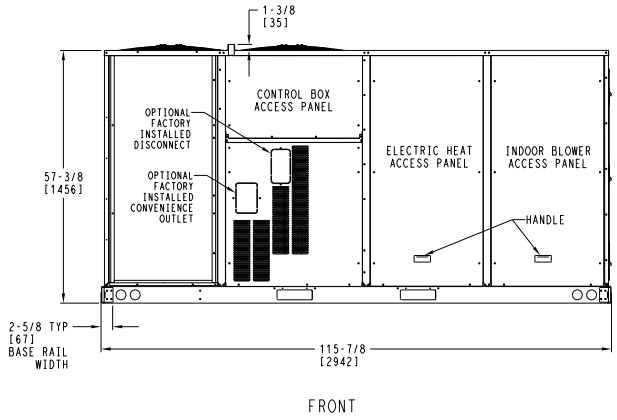

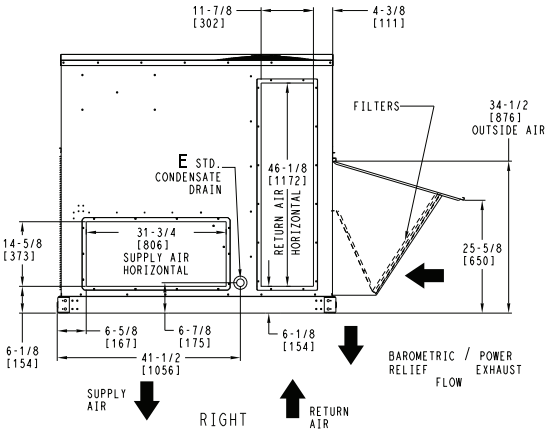

ITC CLASSIFICATION	SHEET	DATE	SUPERCEDES			REV
U.S. ECCN:NSR	1 OF 2	8/10/23	-	50FE 16 SINGLE ZONE ELECTRICAL COOLING WITH ELECTRIC HEAT	50TM003165	-

Carrier

50FE-*16 Base Unit Dimensions (cont)

UNIT	STD UNIT WEIGHT		CORNER WEIGHT (A)		CORNER WEIGHT (B)		CORNER WEIGHT (C)		CORNER WEIGHT (D)		C.G.		
	LBS.	KG.	LBS.	KG.	LBS.	KG.	LBS.	KG.	LBS.	KG.	X	Y	Z
50FE-M16	1325	601	370	168	312	142	294	133	349	158	53 [1345]	30 3/4 [781]	22 [559]

STANDARD UNIT WEIGHT IS WITHOUT ELECTRIC HEAT & WITHOUT PACKAGING.
FOR OPTIONS & ACCESSORIES, REFER TO THE PRODUCT DATA CATALOG.

Carrier
THIS DOCUMENT IS THE PROPERTY OF CARRIER CORPORATION AND IS DELIVERED UPON THE EXPRESS CONDITION THAT THE CONTENTS WILL NOT BE DISCLOSED OR USED WITHOUT CARRIER CORPORATION'S WRITTEN CONSENT.
SUBMISSION OF THESE DRAWINGS OR DOCUMENTS DOES NOT CONSTITUTE PART PERFORMANCE OR ACCEPTANCE OF CONTRACT.

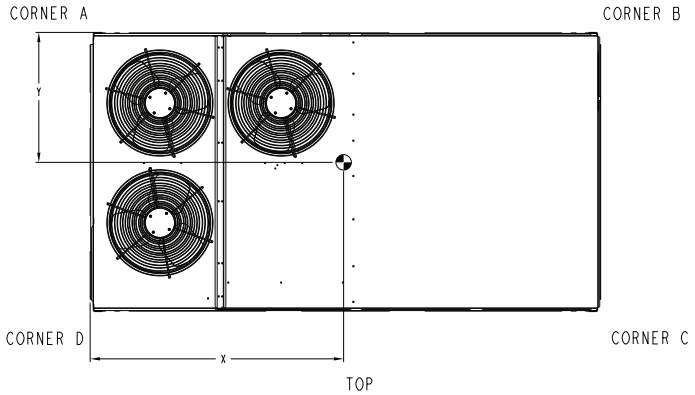

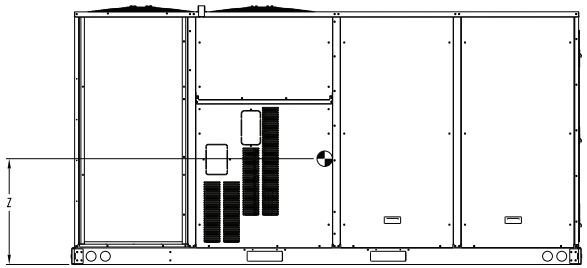

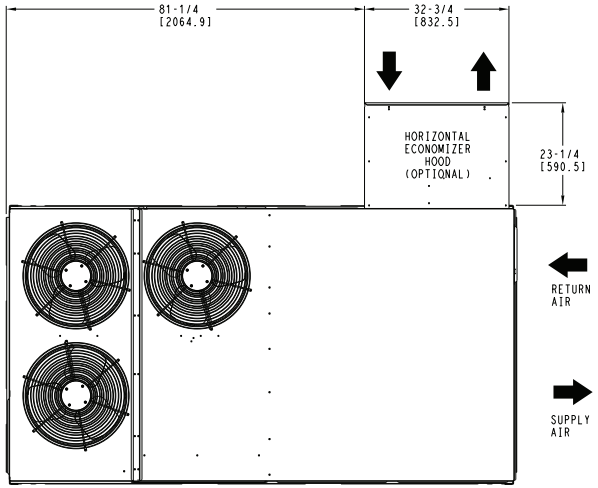

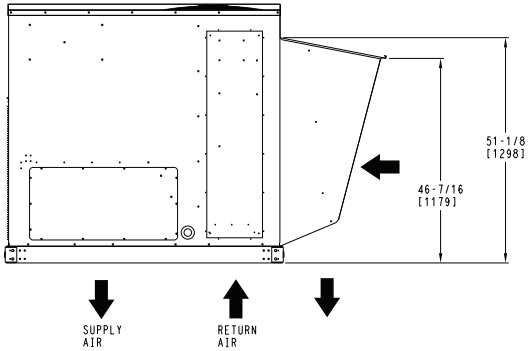

HORIZONTAL ECONOMIZER

ITC CLASSIFICATION	SHEET	DATE	SUPERCEDES			REV
U.S. ECCN:NSR	2 OF 2	8/10/23	-	50FE 16 SINGLE ZONE ELECTRICAL COOLING WITH ELECTRIC HEAT	50TM003165	-

50FE**16 Base Unit Dimensions — Clearances

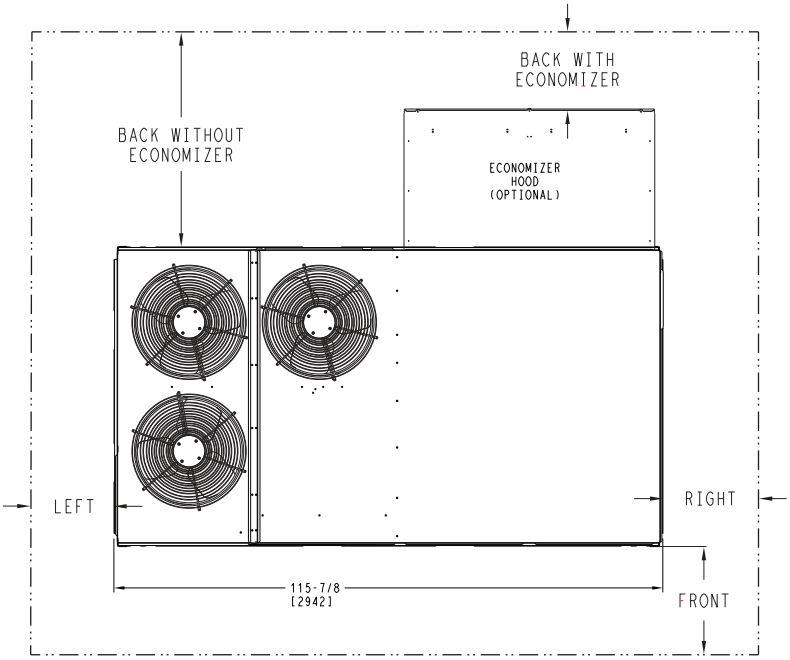

CLEARANCE[a,b]			
SURFACE	**Service with Conductive Barrier**	**Service with Non-conductive Barrier**	**Operating Clearance**
FRONT	48 in. (1219 mm)	36 in. (914 mm)	18 in. (457 mm)
LEFT	48 in. (1219 mm)	42 in. (1067 mm)	18 in. (457 mm)
BACK W/O ECONOMIZER	48 in. (1219 mm)	42 in. (1067 mm)	18 in. (457 mm)
BACK W/ ECONOMIZER	36 in. (914 mm)	36 in. (914 mm)	18 in. (457 mm)
RIGHT	36 in. (914 mm)	36 in. (914 mm)	18 in. (457 mm)
LEFT	72 in. (1829 mm)	72 in. (1829 mm)	72 in. (1829 mm)

NOTE(S):

a. For all minimum clearances local codes or jurisdictions may prevail.
b. See page 29 for 48FE 08-12 clearances, See page 32 for 48FE 14 clearances.

Roof Curb Dimensions — 48/50FE 08-14

ROOF CURB ACCESSORY #	A
CRRFCURB003A01	14" [356]
CRRFCURB004A01	24" [610]

NOTES:
1. ROOFCURB ACCESSORY IS SHIPPED DISASSEMBLED.
2. INSULATED PANELS: 25.4 [1"] THK. POLYURETHANE FOAM, 44.5 [1-3/4] # DENSITY.
3. DIMENSIONS IN [ ] ARE IN MILLIMETERS.
4. ROOFCURB: 18 GAGE STEEL.
5. ATTACH DUCTWORK TO CURB. (FLANGES OF DUCT REST ON CURB).
6. SERVICE CLEARANCE 4 FEET ON EACH SIDE.
7. DIRECTION OF AIR FLOW.
8. CONNECTOR PACKAGE CRBTMPWR002A01 IS FOR THRU-THE-CURB GAS TYPE PACKAGE CRBTMPWR004A01 IS FOR THRU-THE-BOTTOM TYPE GAS CONNECTIONS.

CONNECTOR PKG. ACC.	GAS CONNECTION TYPE	GAS FITTING	POWER WIRING FITTING	CONTROL WIRING FITTING	ACCESSORY CONVENIENCE OUTLET WIRING CONNECTOR
CRBTMPWR002A01	THRU THE CURB	3/4" [19] NPT	1 1/4" [31.7] NPT	1/2" [12.7] NPT	1/2" [12.7] NPT
CRBTMPWR004A01	THRU THE BOTTOM				

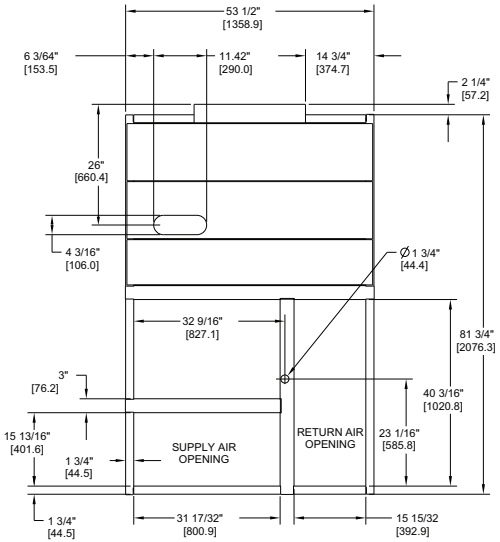

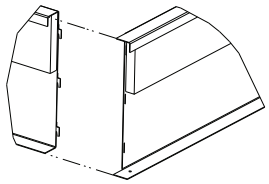

VIEW "B"
CORNER DETAIL

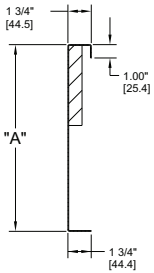

SECTION THRU SIDE

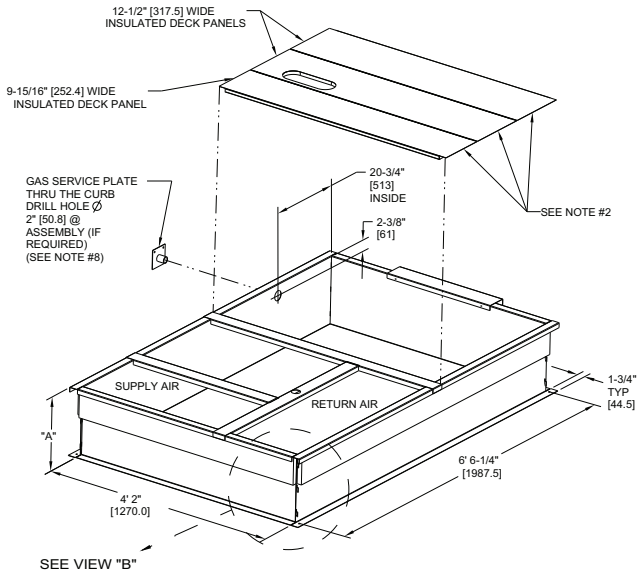

CERTIFIED DRAWING

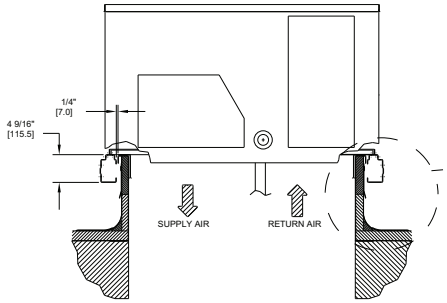

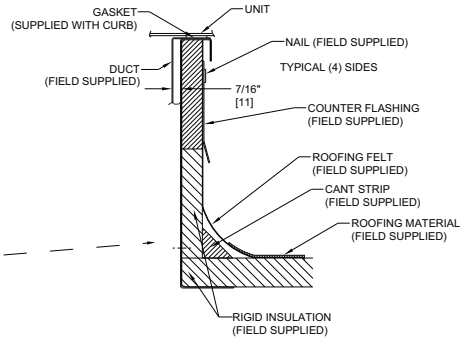

REV	REVISION RECORD	DATE	BY	CHK'D	APP'D	ECN NO.
C	6' 61/4" WAS 6' 7 1/6", 4'2' WAS 4' 2 13/16"; 18 GA WAS 16 GA.; 15 13/16" WAS 15 15/16"; NAIL FIELD SUPPLIED WAS WITH CURB	4/22/13	MMC	-	-	1067898

DRAWING RELEASE LEVEL: PRODUCTION			
THIRD ANGLE PROJECTION	UNLESS OTHERWISE SPECIFIED DIMENSIONS ARE IN INCHES TOLERANCES ON: 1 DEC ± - 2 DEC ± - 3 DEC ± - ANG ± -	THIS DOCUMENT AND THE INFORMATION CONTAINED THEREIN IS PROPRIETARY TO CARRIER CORPORATION AND SHALL NOT BE USED OR DISCLOSED TO OTHERS, IN WHOLE OR IN PART, WITHOUT THE WRITTEN AUTHORIZATION OF CARRIER CORPORATION.	
MATERIAL - - -	AUTHORIZATION NUMBER 1029120	TITLE CURB ASY, ROOF	
ENGINEERING REQUIREMENTS T-005, Y-002	ENGINEERING - - MANUFACTURING - -	SIZE D	DRAWING NUMBER 50HJ405012 SHEET 5 OF 5 / REV C
WEIGHT: -	DRAFTER MMC 12/16/09 CHECKER - -		
SURFACE FINISH - / MFG/PURCH PURCH	MODEL (INTERNAL USE ONLY)	NEXT DRAWING - / SCALE N/A	DISTRIBUTION -

Roof Curb Dimensions — 48/50FE 16

ROOF CURB ACCESSORY #	A
CRRFCURB074A00	14" [356]
CRRFCURB075A00	24" [610]

NOTES:
1. ROOFCURB ACCESSORY IS SHIPPED DISASSEMBLED.
2. INSULATED PANELS: 1/2" THK. NEOPRENE FOAM, 1.0# DENSITY.
3. DIMENSIONS IN [ ] ARE IN MILLIMETERS.
4. ROOFCURB SIDEWALLS: 16 GAGE STEEL.
5. ATTACH DUCTWORK TO CURB. (FLANGES OF DUCT REST ON CURB).
6. SERVICE CLEARANCE 4 FT ON EACH SIDE.
7. ➡ DIRECTION OF AIR FLOW.
8. "L" & "S" DESIGNATIONS DENOTE LOCATION OF COMMON CROSS RAIL. (POSITION "L" FOR LARGE DUCT OPENING CURB).

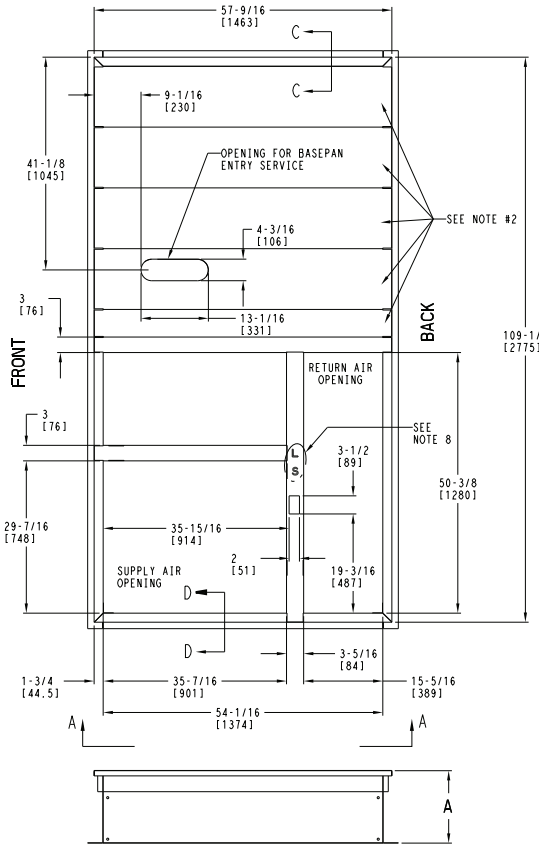

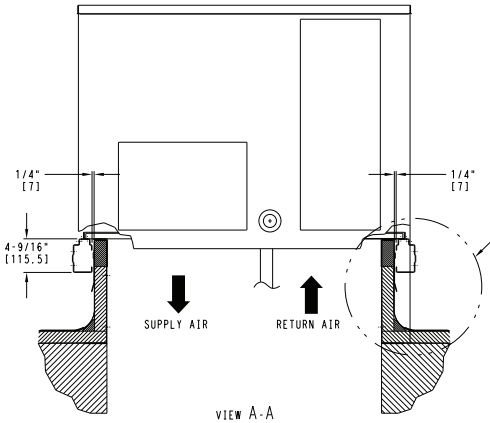

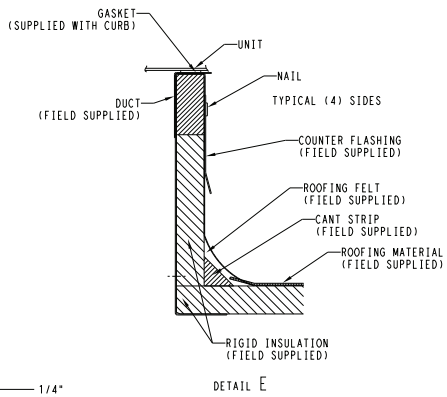

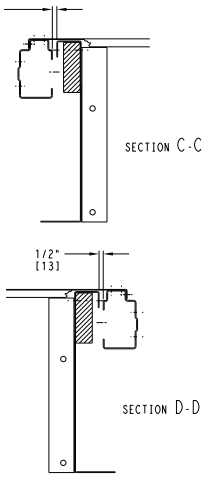

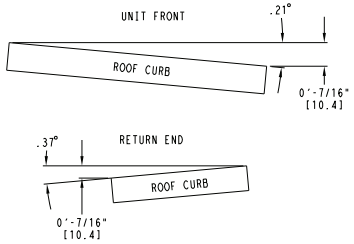

MAX CURB LEVELING TOLERANCES

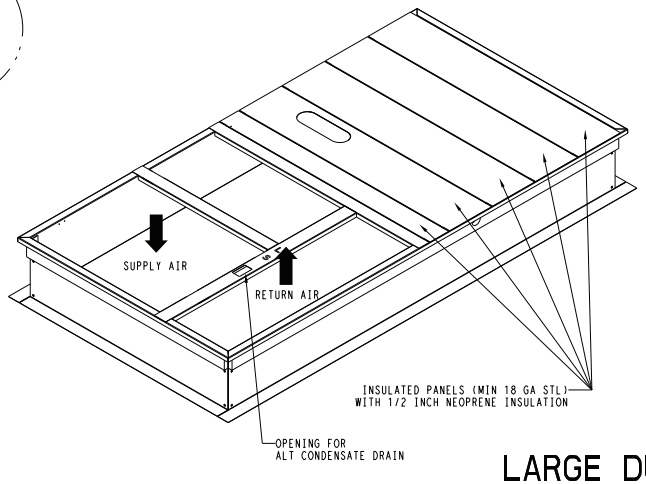

LARGE DUCT OPENINGS

50TM500780	REV B

48/50FE**08 Two Stage Cooling Capacities

48/50FE**08				AMBIENT TEMPERATURE (°F)														
				85			95			105			115			125		
				EA (db)			EA (db)			EA (db)			EA (db)			EA (db)		
				75	80	85	75	80	85	75	80	85	75	80	85	75	80	85
2250 cfm	EA (wb)	58	TC	80.7	80.7	91.2	77.4	77.4	87.5	73.8	73.8	83.6	70.0	70.0	79.3	65.9	65.9	74.7
			SHC	70.2	80.7	91.2	67.3	77.4	87.5	64.1	73.8	83.6	60.7	70.0	79.3	57.1	65.9	74.7
		62	TC	85.2	85.2	85.2	80.7	80.7	84.3	76.3	76.3	81.9	71.5	71.5	79.3	66.5	66.5	76.2
			SHC	56.5	67.6	78.7	61.1	72.7	84.3	58.7	70.3	81.9	56.2	67.7	79.3	53.4	64.8	76.2
		67	TC	93.4	93.4	93.4	88.9	88.9	88.9	84.0	84.0	84.0	78.8	78.8	78.8	73.3	73.3	73.3
			SHC	51.8	63.4	75.0	49.7	61.3	72.9	47.4	59.0	70.7	45.0	56.7	68.3	42.5	54.2	65.9
		72	TC	102.8	102.8	102.8	97.9	97.9	97.9	92.6	92.6	92.6	87.0	87.0	87.0	80.9	80.9	80.9
			SHC	40.1	51.5	62.9	37.9	49.4	60.8	35.6	47.1	58.6	33.2	44.8	56.3	30.7	42.3	53.9
		76	TC	—	111.1	111.1	—	105.8	105.8	—	100.1	100.1	—	94.0	94.0	—	87.6	87.6
			SHC	—	41.5	53.8	—	39.5	51.9	—	37.3	47.3	—	35.0	45.7	—	32.6	43.6
2650 cfm	EA (wb)	58	TC	85.5	85.5	96.6	81.9	81.9	92.6	78.1	78.1	88.3	74.0	74.0	83.7	69.5	69.5	78.7
			SHC	74.4	85.5	96.6	71.3	81.9	92.6	67.9	78.1	88.3	64.2	74.0	83.7	60.2	69.5	78.7
		62	TC	87.8	87.8	95.4	83.4	83.4	92.8	78.9	78.9	89.9	75.3	75.3	83.2	70.6	70.6	78.6
			SHC	68.6	82.0	95.4	66.2	79.5	92.8	63.6	76.7	89.9	59.1	71.1	83.2	55.6	67.1	78.6
		67	TC	96.4	96.4	96.4	91.6	91.6	91.6	86.5	86.5	86.5	81.0	81.0	81.0	75.2	75.2	75.2
			SHC	55.3	68.8	82.4	53.1	66.6	80.2	50.8	64.4	77.9	48.3	61.9	75.5	45.8	59.4	73.0
		72	TC	105.8	105.8	105.8	100.6	100.6	100.6	95.1	95.1	95.1	89.1	89.1	89.1	82.9	82.9	82.9
			SHC	41.4	54.8	68.1	39.2	52.6	66.0	36.8	50.3	63.8	34.4	47.9	61.5	31.9	45.4	59.0
		76	TC	—	114.1	114.1	—	108.5	108.5	—	102.6	102.6	—	96.2	96.2	—	89.6	89.6
			SHC	—	43.2	55.1	—	41.1	53.5	—	38.9	51.6	—	36.5	49.5	—	34.1	47.2
3000 cfm	EA (wb)	58	TC	89.0	89.0	100.5	85.3	85.3	96.4	81.2	81.2	91.8	76.9	76.9	87.0	72.2	72.2	81.7
			SHC	77.5	89.0	100.5	74.2	85.3	96.4	70.6	81.2	91.8	66.7	76.9	87.0	62.6	72.2	81.7
		62	TC	90.0	90.0	102.0	85.7	85.7	98.7	82.0	82.0	93.2	77.4	77.4	88.9	72.3	72.3	85.1
			SHC	72.6	87.3	102.0	69.8	84.2	98.7	66.0	79.6	93.2	62.7	75.8	88.9	59.4	72.3	85.1
		67	TC	98.3	98.3	98.3	93.4	93.4	93.4	88.1	88.1	88.1	82.5	82.5	82.5	76.5	76.5	79.0
			SHC	58.1	73.3	88.5	55.9	71.1	86.4	53.5	68.8	84.0	51.1	66.3	81.6	48.5	63.7	79.0
		72	TC	107.8	107.8	107.8	102.5	102.5	102.5	96.7	96.7	96.7	90.6	90.6	90.6	84.2	84.2	84.2
			SHC	42.3	57.4	72.5	40.1	55.2	70.3	37.7	52.9	68.1	35.3	50.5	65.7	32.8	48.0	63.2
		76	TC	—	116.2	116.2	—	110.4	110.4	—	104.3	104.3	—	97.7	97.7	—	90.9	90.9
			SHC	—	44.4	58.5	—	42.2	56.6	—	40.0	54.6	—	37.6	52.3	—	35.1	50.0
3400 cfm	EA (wb)	58	TC	92.5	92.5	104.4	88.5	88.5	100.0	84.2	84.2	95.2	79.6	79.6	90.1	74.8	74.8	84.7
			SHC	80.6	92.5	104.4	77.0	88.5	100.0	73.2	84.2	95.2	69.2	79.6	90.1	64.9	74.8	84.7
		62	TC	94.5	94.5	101.5	90.3	90.3	97.8	84.3	84.3	99.0	79.7	79.7	93.7	74.8	74.8	88.1
			SHC	73.3	87.4	101.5	70.3	84.1	97.8	69.6	84.3	99.0	65.7	79.7	93.7	61.6	74.8	88.1
		67	TC	100.1	100.1	100.1	95.0	95.0	95.0	89.5	89.5	90.7	83.8	83.8	88.2	77.6	77.6	85.4
			SHC	61.2	78.3	95.3	58.9	76.0	93.1	56.6	73.6	90.7	54.1	71.1	88.2	51.5	68.4	85.4
		72	TC	109.7	109.7	109.7	104.1	104.1	104.1	98.2	98.2	98.2	91.9	91.9	91.9	85.4	85.4	85.4
			SHC	43.2	60.2	77.2	41.0	58.0	75.0	38.6	55.7	72.7	36.2	53.3	70.3	33.7	50.8	67.9
		76	TC	—	118.0	118.0	—	112.1	112.1	—	105.8	105.8	—	99.0	99.0	—	84.7	84.7
			SHC	—	45.5	61.7	—	43.3	59.7	—	41.0	57.6	—	38.5	55.3	—	52.2	73.0
3750 cfm	EA (wb)	58	TC	95.0	95.0	107.3	90.9	90.9	102.7	86.5	86.5	97.8	81.7	81.7	92.4	76.6	76.6	86.7
			SHC	82.8	95.0	107.3	79.1	90.9	102.7	75.2	86.5	97.8	71.0	81.7	92.4	66.5	76.6	86.7
		62	TC	97.2	97.2	103.5	91.0	91.0	106.8	86.6	86.6	101.6	81.8	81.8	96.1	76.7	76.7	90.2
			SHC	74.9	89.2	103.5	75.3	91.0	106.8	71.5	86.6	101.6	67.5	81.8	96.1	63.2	76.7	90.2
		67	TC	101.4	101.4	101.4	96.2	96.2	98.8	90.6	90.6	96.3	84.7	84.7	93.6	78.5	78.5	90.8
			SHC	63.8	82.4	101.1	61.5	80.2	98.8	59.1	77.7	96.3	56.6	75.1	93.6	54.0	72.4	90.8
		72	TC	111.0	111.0	111.0	105.3	105.3	105.3	99.3	99.3	99.3	92.9	92.9	92.9	86.2	86.2	86.2
			SHC	43.9	62.5	81.1	41.6	60.3	78.9	39.3	58.0	76.6	36.8	55.5	74.2	34.3	53.0	71.8
		76	TC	—	119.3	119.3	—	113.3	113.3	—	106.8	106.8	—	99.9	99.9	—	92.9	92.9
			SHC	—	46.2	64.2	—	44.0	62.1	—	41.6	59.9	—	39.2	57.6	—	36.7	55.2

LEGEND

— — Do Not Operate
cfm — Cubic Feet Per Minute (Supply Air)
EA (db) — Entering Air Temperature (dry bulb)
EA (wb) — Entering Air Temperature (wet bulb)
SHC — Sensible Heat Capacity (1000 Btuh) Gross
TC — Total Capacity (1000 Btuh) Gross

NOTE: See minimum-maximum airflow ratings on page 8.

48/50FE**08 Single Stage Cooling Capacities

48/50FE**08				AMBIENT TEMPERATURE (°F)														
				85			95			105			115			125		
				EA (db)			EA (db)			EA (db)			EA (db)			EA (db)		
				75	80	85	75	80	85	75	80	85	75	80	85	75	80	85
1150 cfm	EA (wb)	58	TC	41.5	41.5	47.1	40.2	40.2	45.6	38.7	38.7	43.9	37.0	37.0	42.0	35.1	35.1	39.9
			SHC	35.9	41.5	47.1	34.8	40.2	45.6	33.5	38.7	43.9	32.0	37.0	42.0	30.4	35.1	39.9
		62	TC	44.1	44.1	44.6	42.3	42.3	43.7	40.2	40.2	42.8	38.0	38.0	41.8	35.6	35.6	40.6
			SHC	32.4	38.5	44.6	31.5	37.6	43.7	30.6	36.7	42.8	29.6	35.7	41.8	28.5	34.5	40.6
		67	TC	49.0	49.0	49.0	47.0	47.0	47.0	44.8	44.8	44.8	42.3	42.3	42.3	39.7	39.7	39.7
			SHC	26.6	32.7	38.8	25.8	31.9	38.0	24.9	31.0	37.1	23.9	30.0	36.1	22.8	29.0	35.1
		72	TC	54.3	54.3	54.3	52.1	52.1	52.1	49.7	49.7	49.7	47.1	47.1	47.1	44.2	44.2	44.2
			SHC	20.8	26.8	32.7	20.0	26.0	32.0	19.0	25.1	31.1	18.1	24.1	30.2	17.0	23.1	29.1
		76	TC	—	59.0	59.0	—	56.6	56.6	—	54.0	54.0	—	51.1	51.1	—	44.8	44.8
			SHC	—	21.8	28.1	—	21.0	27.4	—	20.2	25.4	—	19.3	24.8	—	21.3	27.5
1350 cfm	EA (wb)	58	TC	44.3	44.3	50.2	42.8	42.8	48.5	41.2	41.2	46.7	39.3	39.3	44.6	37.3	37.3	42.3
			SHC	38.4	44.3	50.2	37.1	42.8	48.5	35.7	41.2	46.7	34.1	39.3	44.6	32.3	37.3	42.3
		62	TC	45.8	45.8	49.5	43.8	43.8	48.6	41.7	41.7	47.5	40.0	40.0	44.6	37.4	37.4	44.0
			SHC	35.3	42.4	49.5	34.4	41.5	48.6	33.4	40.5	47.5	31.5	38.0	44.6	30.7	37.4	44.0
		67	TC	50.7	50.7	50.7	48.6	48.6	48.6	46.2	46.2	46.2	43.7	43.7	43.7	40.9	40.9	40.9
			SHC	28.6	35.7	42.8	27.7	34.9	42.0	26.8	33.9	41.1	25.8	32.9	40.1	24.7	31.9	39.0
		72	TC	56.2	56.2	56.2	53.8	53.8	53.8	51.2	51.2	51.2	48.4	48.4	48.4	45.4	45.4	45.4
			SHC	21.7	28.7	35.7	20.8	27.9	34.9	19.9	27.0	34.0	18.9	26.0	33.1	17.8	24.9	32.0
		76	TC	—	60.8	60.8	—	58.3	58.3	—	55.6	55.6	—	52.6	52.6	—	49.3	49.3
			SHC	—	22.9	29.2	—	22.1	28.6	—	21.3	27.9	—	20.3	27.1	—	19.3	26.1
1600 cfm	EA (wb)	58	TC	47.2	47.2	53.4	45.5	45.5	51.6	43.7	43.7	49.5	41.7	41.7	47.3	39.5	39.5	44.8
			SHC	40.9	47.2	53.4	39.5	45.5	51.6	37.9	43.7	49.5	36.2	41.7	47.3	34.2	39.5	44.8
		62	TC	47.5	47.5	54.8	46.0	46.0	52.7	43.8	43.8	51.5	41.8	41.8	49.2	39.5	39.5	46.6
			SHC	38.5	46.6	54.8	37.1	44.9	52.7	36.0	43.8	51.5	34.4	41.8	49.2	32.5	39.5	46.6
		67	TC	52.4	52.4	52.4	50.1	50.1	50.1	47.6	47.6	47.6	44.9	44.9	44.9	41.9	41.9	43.7
			SHC	30.9	39.3	47.7	30.0	38.4	46.8	29.0	37.5	45.9	28.0	36.4	44.8	26.9	35.3	43.7
		72	TC	57.9	57.9	57.9	55.4	55.4	55.4	52.7	52.7	52.7	49.7	49.7	49.7	48.2	48.2	48.2
			SHC	22.7	31.0	39.3	21.8	30.1	38.5	20.8	29.2	37.5	19.8	28.2	36.5	17.8	26.4	35.0
		76	TC	—	62.6	62.6	—	60.0	60.0	—	57.1	57.1	—	53.9	53.9	—	50.5	50.5
			SHC	—	24.2	32.1	—	23.4	31.3	—	22.4	30.5	—	21.4	29.6	—	20.4	28.6
1800 cfm	EA (wb)	58	TC	49.1	49.1	55.6	47.4	47.4	53.6	45.4	45.4	51.4	43.3	43.3	49.0	41.0	41.0	46.4
			SHC	42.6	49.1	55.6	41.1	47.4	53.6	39.4	45.4	51.4	37.6	43.3	49.0	35.5	41.0	46.4
		62	TC	48.8	48.8	57.8	47.4	47.4	55.8	45.5	45.5	53.5	43.3	43.3	51.0	41.0	41.0	48.3
			SHC	39.8	48.8	57.8	39.0	47.4	55.8	37.4	45.5	53.5	35.7	43.3	51.0	33.7	41.0	48.3
		67	TC	53.4	53.4	53.4	51.0	51.0	51.0	48.4	48.4	49.6	45.6	45.6	48.5	42.6	42.6	47.2
			SHC	32.6	42.0	51.4	31.7	41.1	50.6	30.8	40.2	49.6	29.7	39.1	48.5	28.5	37.9	47.2
		72	TC	59.0	59.0	59.0	56.4	56.4	56.4	53.5	53.5	53.5	50.5	50.5	50.5	47.2	47.2	47.2
			SHC	23.4	32.7	42.0	22.5	31.8	41.2	21.5	30.9	40.2	20.5	29.9	39.2	19.3	28.7	38.1
		76	TC	—	63.7	63.7	—	61.0	61.0	—	58.0	58.0	—	54.7	54.7	—	51.2	51.2
			SHC	—	25.1	34.1	—	24.2	33.3	—	23.3	32.4	—	22.3	31.5	—	21.2	30.4
2050 cfm	EA (wb)	58	TC	51.2	51.2	57.9	49.3	49.3	55.8	47.2	47.2	53.4	45.0	45.0	50.9	42.5	42.5	48.1
			SHC	44.4	51.2	57.9	42.8	49.3	55.8	41.0	47.2	53.4	39.0	45.0	50.9	36.9	42.5	48.1
		62	TC	51.2	51.2	60.2	49.3	49.3	58.0	47.3	47.3	55.6	45.0	45.0	52.9	42.5	42.5	50.0
			SHC	42.2	51.2	60.2	40.7	49.3	58.0	39.0	47.3	55.6	37.1	45.0	52.9	35.0	42.5	50.0
		67	TC	54.4	54.4	56.0	51.9	51.9	55.0	49.2	49.2	53.9	46.4	46.4	52.8	43.3	43.3	51.5
			SHC	34.7	45.4	56.0	33.8	44.4	55.0	32.8	43.4	53.9	31.7	42.2	52.8	30.5	41.0	51.5
		72	TC	60.0	60.0	60.0	57.3	57.3	57.3	54.4	54.4	54.4	51.2	51.2	51.2	47.8	47.8	47.8
			SHC	24.2	34.8	45.3	23.3	33.9	44.5	22.3	32.9	43.5	21.2	31.9	42.5	20.1	30.8	41.4
		76	TC	—	64.8	64.8	—	62.0	62.0	—	58.8	58.8	—	55.4	55.4	—	51.8	51.8
			SHC	—	26.1	36.4	—	25.2	35.6	—	24.3	34.7	—	23.3	33.7	—	22.1	32.6

LEGEND

— — Do Not Operate
cfm — Cubic Feet Per Minute (Supply Air)
EA (db) — Entering Air Temperature (dry bulb)
EA (wb) — Entering Air Temperature (wet bulb)
SHC — Sensible Heat Capacity (1000 Btuh) Gross
TC — Total Capacity (1000 Btuh) Gross

NOTE: See minimum-maximum airflow ratings on page 8.

48/50FE*N08 — Unit With Humidi-MiZer® System in Subcooling Mode — Cooling Capacities

TEMP (°F) AIR ENTERING CONDENSER (Edb)		AIR ENTERING EVAPORATOR — SCFM/BF (80°F db)								
		2250/0.14			3000 /0.15			3750/0.17		
		Air Entering Evaporator — Ewb (°F)								
		72	67	62	72	67	62	72	67	62
75	TC	95.0	86.0	77.0	104.0	93.0	83.0	108.0	97.0	87.0
	SHC	38.0	49.0	60.0	47.0	60.0	72.0	53.0	69.0	83.0
	kW	6.4	6.4	6.3	6.6	6.5	6.4	6.6	6.5	6.4
85	TC	86.0	81.0	71.0	97.0	86.0	77.0	101.0	91.0	81.0
	SHC	29.0	44.0	54.0	40.0	53.0	67.0	46.0	63.0	76.0
	kW	6.9	7.0	7.0	7.2	7.1	7.0	7.2	7.2	7.1
95	TC	84.0	74.0	65.0	90.0	80.0	71.0	94.0	83.0	74.0
	SHC	28.0	38.0	49.0	34.0	47.0	61.0	40.0	56.0	70.0
	kW	7.8	7.7	7.7	7.9	7.8	7.7	8.0	7.9	7.8
105	TC	77.0	68.0	59.0	82.0	73.0	64.0	86.0	76.0	68.0
	SHC	22.0	32.0	43.0	27.0	41.0	55.0	33.0	49.0	64.0
	kW	8.7	8.5	8.4	8.8	8.6	8.5	8.8	8.7	8.6
115	TC	70.0	61.0	53.0	74.0	65.0	57.0	78.0	68.0	60.0
	SHC	15.0	26.0	37.0	20.0	35.0	49.0	25.0	42.0	57.0
	kW	9.5	9.4	9.3	9.6	9.5	9.4	9.7	9.5	9.4
125	TC	62.0	54.0	46.0	66.0	58.0	50.0	69.0	60.0	53.0
	SHC	8.0	20.0	31.0	13.0	28.0	42.0	18.0	35.0	50.0
	kW	10.5	10.4	10.3	10.6	10.5	10.3	10.7	10.5	10.4

48/50FE*N08 — Unit With Humidi-MiZer System in Hot Gas Reheat Mode — Cooling Capacities

TEMP (°F) AIR ENTERING CONDENSER (Edb)		AIR ENTERING EVAPORATOR — Ewb (°F)								
		75 Dry Bulb 62.5 Wet Bulb (50% Relative)			75 Dry Bulb 64 Wet Bulb (56% Relative)			75 Dry Bulb 65.3 Wet Bulb (60% Relative)		
		Air Entering Evaporator — cfm								
		2250	3000	3750	2250	3000	3750	2250	3000	3750
80	TC	35.0	39.0	41.0	37.0	40.0	42.0	38.0	41.0	43.0
	SHC	8.0	14.0	21.0	4.0	9.0	15.0	0.0	5.0	10.0
	kW	6.6	6.6	6.6	6.6	6.6	6.6	6.6	6.6	6.6
75	TC	37.0	41.0	43.0	39.0	42.0	44.0	40.0	43.0	46.0
	SHC	9.0	16.0	23.0	6.0	12.0	17.0	2.0	7.0	12.0
	kW	5.9	5.9	6.0	5.9	6.0	6.0	6.0	6.1	6.1
70	TC	40.0	43.0	45.0	41.0	44.0	47.0	42.0	46.0	48.0
	SHC	11.0	18.0	25.0	8.0	13.0	19.0	4.0	9.0	14.0
	kW	5.7	5.7	5.7	5.7	5.7	5.7	5.7	5.7	5.7
60	TC	44.0	47.0	50.0	45.0	49.0	51.0	47.0	50.0	53.0
	SHC	15.0	22.0	29.0	11.0	17.0	23.0	8.0	13.0	18.0
	kW	5.7	5.7	5.7	5.7	5.7	5.7	5.7	5.7	5.7
50	TC	47.0	51.0	54.0	49.0	53.0	55.0	51.0	54.0	57.0
	SHC	19.0	26.0	33.0	15.0	21.0	27.0	12.0	17.0	22.0
	kW	5.7	5.6	5.6	5.6	5.6	5.6	5.6	5.6	5.6
40	TC	51.0	55.0	58.0	53.0	57.0	60.0	54.0	59.0	61.0
	SHC	22.0	30.0	37.0	18.0	25.0	31.0	15.0	21.0	26.0
	kW	5.6	5.6	5.6	5.6	5.6	5.6	5.6	5.6	5.6

LEGEND

Edb — Entering Dry Bulb
Ewb — Entering Wet Bulb
kW — Compressor Power Input
SCFM/BF — Standard Cubic Feet per Minute/Bypass Factor
SHC — Sensible Heat Capacity (1000 Btuh) Gross
TC — Total Capacity (1000 Btuh) Gross

48/50FE**09 Two Stage Cooling Capacities

48/50FE**09				AMBIENT TEMPERATURE (°F)														
				85			95			105			115			125		
				EA (db)			EA (db)			EA (db)			EA (db)			EA (db)		
				75	80	85	75	80	85	75	80	85	75	80	85	75	80	85
2550 cfm	EA (wb)	58	TC	88.4	88.4	99.8	84.9	84.9	95.9	81.0	81.0	91.6	76.5	76.5	86.6	71.4	71.4	80.9
			SHC	76.9	88.4	99.8	73.9	84.9	95.9	70.4	81.0	91.6	66.4	76.5	86.6	62.0	71.4	80.9
		62	TC	92.6	92.6	95.8	88.2	88.2	93.6	88.5	88.5	88.5	77.6	77.6	88.0	71.5	71.5	84.2
			SHC	69.9	82.9	95.8	67.7	80.6	93.6	60.6	70.0	79.5	62.3	75.1	88.0	59.0	71.5	84.2
		67	TC	102.2	102.2	102.2	97.3	97.3	97.3	91.8	91.8	91.8	85.7	85.7	85.7	78.9	78.9	78.9
			SHC	57.2	70.0	83.0	54.9	67.8	80.6	52.4	65.4	78.3	49.8	62.7	75.7	46.8	59.8	72.8
		72	TC	112.8	112.8	112.8	107.4	107.4	107.4	101.5	101.5	101.5	94.7	94.7	94.7	87.4	87.4	87.4
			SHC	44.4	57.2	69.9	42.1	54.9	67.8	39.6	52.4	65.3	36.9	49.7	62.7	33.9	46.9	59.9
		76	TC	—	122.2	122.2	—	116.4	116.4	—	109.9	109.9	—	102.8	102.8	—	94.9	94.9
			SHC	—	46.6	59.8	—	44.3	55.9	—	41.9	54.0	—	39.2	51.6	—	36.4	49.0
3000 cfm	EA (wb)	58	TC	93.8	93.8	105.9	90.1	90.1	101.8	85.7	85.7	96.9	81.0	81.0	91.6	75.5	75.5	85.4
			SHC	81.7	93.8	105.9	78.4	90.1	101.8	74.6	85.7	96.9	70.3	81.0	91.6	65.5	75.5	85.4
		62	TC	101.6	101.6	101.6	95.6	95.6	95.6	86.2	86.2	99.9	81.1	81.1	95.3	75.6	75.6	88.9
			SHC	70.4	81.4	92.2	69.2	81.2	93.2	70.5	85.2	99.9	66.9	81.1	95.3	62.3	75.6	88.9
		67	TC	105.6	105.6	105.6	100.3	100.3	100.3	94.5	94.5	94.5	84.4	84.4	84.4	80.1	80.1	80.1
			SHC	61.2	76.5	91.6	59.0	74.1	89.3	56.4	71.6	86.8	38.5	53.8	69.0	47.4	62.7	78.0
		72	TC	116.4	116.4	116.4	110.8	110.8	110.8	104.3	104.3	104.3	97.2	97.2	97.2	89.4	89.4	89.4
			SHC	46.1	61.1	76.2	43.8	58.9	73.9	41.2	56.4	71.5	38.4	53.6	68.7	35.4	50.6	65.8
		76	TC	—	126.0	126.0	—	119.7	119.7	—	112.9	112.9	—	105.3	105.3	—	97.1	97.1
			SHC	—	48.8	62.9	—	46.4	60.8	—	43.8	58.4	—	41.1	55.8	—	38.2	53.2
3400 cfm	EA (wb)	58	TC	98.0	98.0	110.6	93.9	93.9	106.1	89.3	89.3	100.9	84.1	84.1	95.1	78.3	78.3	88.6
			SHC	85.3	98.0	110.6	81.8	93.9	106.1	77.7	89.3	100.9	73.1	84.1	95.1	68.0	78.3	88.6
		62	TC	101.1	101.1	108.4	94.8	94.8	108.8	89.5	89.5	105.0	84.4	84.4	99.1	78.6	78.6	92.4
			SHC	78.4	93.4	108.4	77.1	93.0	108.8	73.9	89.5	105.0	69.6	84.4	99.1	64.8	78.6	92.4
		67	TC	107.9	107.9	107.9	102.5	102.5	102.5	96.5	96.5	96.5	89.6	89.6	91.3	82.2	82.2	88.3
			SHC	64.7	81.8	98.9	61.2	78.3	95.5	58.7	75.9	93.1	57.0	74.1	91.3	54.0	71.2	88.3
		72	TC	118.9	118.9	118.9	112.9	112.9	112.9	106.2	106.2	106.2	99.2	99.2	99.2	90.8	90.8	90.8
			SHC	47.5	64.5	81.6	45.1	62.1	79.2	42.4	59.5	76.6	39.8	56.9	74.0	36.7	53.8	71.0
		76	TC	—	128.4	128.4	—	122.0	122.0	—	115.0	115.0	—	107.0	107.0	—	98.5	98.5
			SHC	—	50.4	66.8	—	48.0	64.5	—	45.5	62.1	—	42.6	59.4	—	39.7	56.6
3850 cfm	EA (wb)	58	TC	101.7	101.7	114.8	97.4	97.4	110.0	92.7	92.7	104.7	87.1	87.1	98.5	81.4	81.4	92.0
			SHC	88.6	101.7	114.8	84.9	97.4	110.0	80.7	92.7	104.7	75.8	87.1	98.5	70.7	81.4	92.0
		62	TC	102.1	102.1	119.5	97.8	97.8	114.6	92.8	92.8	108.9	87.4	87.4	102.6	81.5	81.5	95.7
			SHC	84.6	102.1	119.5	80.9	97.8	114.6	76.7	92.8	108.9	72.2	87.4	102.6	67.2	81.5	95.7
		67	TC	110.4	110.4	110.4	104.3	104.3	104.9	98.1	98.1	102.1	91.1	91.1	99.1	83.5	83.5	95.8
			SHC	67.7	87.0	106.3	66.2	85.5	104.9	63.5	82.8	102.1	60.6	79.9	99.1	57.5	76.6	95.8
		72	TC	121.1	121.1	121.1	114.8	114.8	114.8	108.0	108.0	108.0	100.5	100.5	100.5	92.3	92.3	92.3
			SHC	48.9	68.1	87.3	46.5	65.8	85.1	43.8	63.1	82.4	41.0	60.4	79.7	38.0	57.4	76.7
		76	TC	—	130.7	130.7	—	124.0	124.0	—	116.7	116.7	—	108.6	108.6	—	99.6	99.6
			SHC	—	52.1	70.8	—	49.7	68.5	—	47.1	66.0	—	44.3	63.3	—	41.2	60.3
4250 cfm	EA (wb)	58	TC	104.9	104.9	118.3	100.3	100.3	113.1	95.3	95.3	107.6	89.7	89.7	101.3	83.3	83.3	94.1
			SHC	91.4	104.9	118.3	87.3	100.3	113.1	82.9	95.3	107.6	78.0	89.7	101.3	72.3	83.3	94.1
		62	TC	105.0	105.0	123.0	100.5	100.5	117.7	95.4	95.4	112.0	89.7	89.7	105.3	83.4	83.4	98.1
			SHC	87.0	105.0	123.0	83.3	100.5	117.7	78.9	95.4	112.0	74.1	89.7	105.3	68.9	83.4	98.1
		67	TC	111.3	111.3	114.1	105.7	105.7	111.8	99.2	99.2	108.9	92.1	92.1	105.7	84.6	84.6	102.2
			SHC	71.7	92.9	114.1	69.4	90.5	111.8	66.6	87.7	108.9	63.7	84.7	105.7	60.5	81.4	102.2
		72	TC	122.6	122.6	122.6	116.2	116.2	116.2	109.3	109.3	109.3	101.7	101.7	101.7	93.4	93.4	93.4
			SHC	50.1	71.3	92.5	47.6	68.8	90.1	45.0	66.2	87.4	42.1	63.3	84.5	39.2	60.5	81.8
		76	TC	—	132.4	132.4	—	125.5	125.5	—	117.9	117.9	—	109.6	109.6	—	—	—
			SHC	—	53.5	74.2	—	51.0	71.8	—	48.4	69.3	—	45.5	66.5	—	—	—

LEGEND

— — Do Not Operate
cfm — Cubic Feet Per Minute (Supply Air)
EA (db) — Entering Air Temperature (dry bulb)
EA (wb) — Entering Air Temperature (wet bulb)
SHC — Sensible Heat Capacity (1000 Btuh) Gross
TC — Total Capacity (1000 Btuh) Gross

NOTE: See minimum-maximum airflow ratings on page 8.

48/50FE**09 Single Stage Cooling Capacities

48/50FE**09				AMBIENT TEMPERATURE (°F)														
				85			95			105			115			125		
				EA (db)			EA (db)			EA (db)			EA (db)			EA (db)		
				75	80	85	75	80	85	75	80	85	75	80	85	75	80	85
1275 cfm	EA (wb)	58	TC	42.8	42.8	49.0	39.9	39.9	45.9	36.9	36.9	42.6	33.6	33.6	39.1	30.0	30.0	35.2
			SHC	36.6	42.8	49.0	33.9	39.9	45.9	31.1	36.9	42.6	28.0	33.6	39.1	24.8	30.0	35.2
		62	TC	45.7	45.7	46.8	42.2	42.2	44.5	38.5	38.5	42.1	38.8	38.8	44.9	31.1	31.1	35.3
			SHC	33.0	39.9	46.8	30.7	37.6	44.5	28.2	35.1	42.1	32.7	38.8	44.9	22.4	28.9	35.3
		67	TC	51.7	51.7	51.7	48.1	48.1	48.1	44.1	44.1	44.1	39.9	39.9	39.9	35.2	35.2	35.2
			SHC	27.1	34.0	40.9	24.7	31.6	38.5	22.3	29.2	36.1	19.7	26.6	33.5	17.0	23.9	30.9
		72	TC	58.3	58.3	58.3	54.4	54.4	54.4	50.2	50.2	50.2	45.7	45.7	45.7	40.8	40.8	40.8
			SHC	21.1	27.9	34.7	18.7	25.5	32.4	16.2	23.1	29.9	13.7	20.5	27.4	11.0	17.8	24.7
		76	TC	—	—	—	—	—	—	—	—	—	—	—	—	—	—	—
			SHC	—	—	—	—	—	—	—	—	—	—	—	—	—	—	—
1500 cfm	EA (wb)	58	TC	46.3	46.3	52.9	43.2	43.2	49.6	40.0	40.0	46.1	36.4	36.4	42.3	32.6	32.6	38.1
			SHC	39.7	46.3	52.9	36.9	43.2	49.6	33.9	40.0	46.1	30.6	36.4	42.3	27.1	32.6	38.1
		62	TC	49.6	49.6	56.6	44.2	44.2	50.3	41.2	41.2	46.3	36.5	36.5	44.3	32.7	32.7	40.1
			SHC	40.8	48.7	56.6	34.2	42.3	50.3	31.1	38.7	46.3	28.7	36.5	44.3	25.3	32.7	40.1
		67	TC	53.9	53.9	53.9	50.1	50.1	50.1	47.2	47.2	47.2	41.5	41.5	41.5	37.6	37.6	38.6
			SHC	29.6	37.6	45.7	27.1	35.2	43.3	27.9	35.9	44.0	22.0	30.1	38.2	22.4	30.5	38.6
		72	TC	60.7	60.7	60.7	56.6	56.6	56.6	52.2	52.2	52.2	47.4	47.4	47.4	—	—	—
			SHC	22.3	30.4	38.4	19.9	27.9	36.0	17.4	25.4	33.5	14.8	22.8	30.9	—	—	—
		76	TC	—	—	—	—	—	—	—	—	—	—	—	—	—	—	—
			SHC	—	—	—	—	—	—	—	—	—	—	—	—	—	—	—
1700 cfm	EA (wb)	58	TC	49.0	49.0	55.8	45.7	45.7	52.4	42.3	42.3	48.7	38.6	38.6	44.7	34.6	34.6	40.3
			SHC	42.1	49.0	55.8	39.1	45.7	52.4	35.9	42.3	48.7	32.5	38.6	44.7	28.9	34.6	40.3
		62	TC	50.2	50.2	56.0	45.8	45.8	54.7	42.4	42.4	50.9	38.7	38.7	46.8	34.7	34.7	42.3
			SHC	39.0	47.5	56.0	37.0	45.8	54.7	33.9	42.4	50.9	30.6	38.7	46.8	27.0	34.7	42.3
		67	TC	55.5	55.5	55.5	51.4	51.4	51.4	47.2	47.2	47.2	42.6	42.6	42.6	37.6	37.6	39.5
			SHC	31.6	40.8	49.9	29.2	38.3	47.5	26.6	35.8	44.9	24.0	33.1	42.3	21.2	30.3	39.5
		72	TC	62.3	62.3	62.3	58.1	58.1	58.1	53.5	53.5	53.5	—	—	—	—	—	—
			SHC	23.3	32.4	41.5	20.9	29.9	39.0	18.3	27.4	36.5	—	—	—	—	—	—
		76	TC	—	—	—	—	—	—	—	—	—	—	—	—	—	—	—
			SHC	—	—	—	—	—	—	—	—	—	—	—	—	—	—	—
1925 cfm	EA (wb)	58	TC	51.5	51.5	58.7	48.1	48.1	55.0	44.6	44.6	51.2	40.7	40.7	47.0	36.5	36.5	42.4
			SHC	44.4	51.5	58.7	41.2	48.1	55.0	38.0	44.6	51.2	34.4	40.7	47.0	30.6	36.5	42.4
		62	TC	51.6	51.6	61.2	48.2	48.2	57.4	44.6	44.6	53.5	40.8	40.8	49.2	36.6	36.6	44.5
			SHC	42.0	51.6	61.2	39.0	48.2	57.4	35.8	44.6	53.5	32.4	40.8	49.2	28.6	36.6	44.5
		67	TC	56.8	56.8	56.8	52.7	52.7	52.7	48.3	48.3	49.4	43.5	43.5	46.7	38.4	38.4	43.8
			SHC	33.8	44.1	54.5	31.4	41.7	52.0	28.8	39.1	49.4	26.1	36.4	46.7	23.2	33.5	43.8
		72	TC	63.8	63.8	63.8	—	—	—	—	—	—	—	—	—	—	—	—
			SHC	24.3	34.6	44.8	—	—	—	—	—	—	—	—	—	—	—	—
		76	TC	—	—	—	—	—	—	—	—	—	—	—	—	—	—	—
			SHC	—	—	—	—	—	—	—	—	—	—	—	—	—	—	—
2125 cfm	EA (wb)	58	TC	53.5	53.5	60.9	50.0	50.0	57.1	46.3	46.3	53.1	42.3	42.3	48.8	38.0	38.0	44.1
			SHC	46.1	53.5	60.9	42.9	50.0	57.1	39.5	46.3	53.1	35.8	42.3	48.8	31.9	38.0	44.1
		62	TC	53.6	53.6	63.4	50.1	50.1	59.6	46.4	46.4	55.5	42.4	42.4	51.0	38.0	38.0	46.2
			SHC	43.7	53.6	63.4	40.6	50.1	59.6	37.3	46.4	55.5	33.7	42.4	51.0	29.9	38.0	46.2
		67	TC	57.8	57.8	58.4	53.6	53.6	55.9	49.1	49.1	53.3	44.3	44.3	50.5	39.1	39.1	47.5
			SHC	35.7	47.1	58.4	33.2	44.5	55.9	30.6	41.9	53.3	27.8	39.2	50.5	25.0	36.2	47.5
		72	TC	—	—	—	—	—	—	—	—	—	—	—	—	—	—	—
			SHC	—	—	—	—	—	—	—	—	—	—	—	—	—	—	—
		76	TC	—	—	—	—	—	—	—	—	—	—	—	—	—	—	—
			SHC	—	—	—	—	—	—	—	—	—	—	—	—	—	—	—

LEGEND

— — Do Not Operate
cfm — Cubic Feet Per Minute (Supply Air)
EA (db) — Entering Air Temperature (dry bulb)
EA (wb) — Entering Air Temperature (wet bulb)
SHC — Sensible Heat Capacity (1000 Btuh) Gross
TC — Total Capacity (1000 Btuh) Gross

NOTE: See minimum-maximum airflow ratings on page 8.

48/50FE*N09 — Unit With Humidi-MiZer® System in Subcooling Mode — Cooling Capacities

TEMP (°F) AIR ENTERING CONDENSER (Edb)		AIR ENTERING EVAPORATOR — SCFM/BF (80°F db)								
		2550/0.11			3400/0.14			4250/0.15		
		Air Entering Evaporator — Ewb (°F)								
		72	67	62	72	67	62	72	67	62
75	TC	108.0	96.0	86.0	108.0	97.0	90.0	119.0	107.0	97.0
	SHC	46.0	57.0	69.0	48.0	64.0	82.0	61.0	79.0	95.0
	kW	7.3	7.2	7.1	7.2	7.1	7.1	7.5	7.3	7.3
85	TC	101.0	86.0	79.0	107.0	96.0	85.0	111.0	100.0	90.0
	SHC	40.0	48.0	63.0	47.0	63.0	77.0	54.0	73.0	88.0
	kW	8.0	7.8	7.8	8.1	8.0	7.9	8.1	8.0	7.9
95	TC	93.0	82.0	73.0	99.0	88.0	78.0	103.0	92.0	84.0
	SHC	33.0	46.0	58.0	40.0	56.0	71.0	47.0	66.0	77.0
	kW	8.7	8.6	8.5	8.8	8.7	8.6	8.9	8.7	8.6
105	TC	85.0	75.0	66.0	90.0	80.0	71.0	94.0	83.0	75.0
	SHC	27.0	40.0	52.0	33.0	50.0	65.0	40.0	60.0	74.0
	kW	9.5	9.4	9.3	9.6	9.5	9.4	9.7	9.5	9.4
115	TC	77.0	68.0	59.0	81.0	72.0	63.0	85.0	75.0	69.0
	SHC	21.0	33.0	46.0	26.0	43.0	59.0	33.0	53.0	62.0
	kW	10.4	10.3	10.2	10.5	10.4	10.3	10.5	10.4	10.3
125	TC	69.0	60.0	51.0	73.0	64.0	56.0	75.0	66.0	60.0
	SHC	14.0	27.0	40.0	20.0	37.0	52.0	25.0	46.0	58.0
	kW	11.4	11.3	11.2	11.5	11.4	11.3	11.5	11.4	11.3

48/50FE*N09 — Unit With Humidi-MiZer System in Hot Gas Reheat Mode — Cooling Capacities

TEMP (°F) AIR ENTERING CONDENSER (Edb)		AIR ENTERING EVAPORATOR — Ewb (°F)								
		75 Dry Bulb 62.5 Wet Bulb (50% Relative)			75 Dry Bulb 64 Wet Bulb (56% Relative)			75 Dry Bulb 65.3 Wet Bulb (60% Relative)		
		Air Entering Evaporator — cfm								
		2550	3400	4250	2550	3400	4250	2550	3400	4250
80	TC	36.0	39.0	41.0	37.0	40.0	430.0	38.0	42.0	44.0
	SHC	7.0	14.0	22.0	2.0	8.0	155.0	-2.0	3.0	9.0
	kW	6.2	6.2	6.2	6.3	6.3	6.2	6.3	6.3	6.3
75	TC	38.0	41.0	43.0	39.0	43.0	45.0	41.0	44.0	46.0
	SHC	8.0	16.0	24.0	4.0	11.0	17.0	0.0	6.0	12.0
	kW	5.4	5.4	5.4	5.4	5.5	5.5	5.6	5.6	5.7
70	TC	40.0	43.0	46.0	41.0	45.0	47.0	43.0	46.0	48.0
	SHC	10.0	18.0	26.0	6.0	13.0	19.0	2.0	8.0	14.0
	kW	5.2	5.2	5.2	5.2	5.2	5.2	5.2	5.2	5.2
60	TC	44.0	48.0	50.0	46.0	49.0	52.0	47.0	50.0	53.0
	SHC	14.0	22.0	30.0	9.0	16.0	23.0	5.0	11.0	17.0
	kW	5.2	5.1	5.1	5.1	5.1	5.1	5.1	5.1	5.1
50	TC	48.0	52.0	54.0	50.0	54.0	56.0	51.0	55.0	57.0
	SHC	17.0	26.0	34.0	13.0	20.0	27.0	9.0	15.0	21.0
	kW	5.1	5.1	5.1	5.1	5.1	5.1	5.1	5.1	5.1
40	TC	52.0	56.0	58.0	54.0	58.0	60.0	55.0	59.0	62.0
	SHC	21.0	30.0	38.0	16.0	24.0	31.0	12.0	19.0	25.0
	kW	5.1	5.1	5.1	5.1	5.1	5.1	5.1	5.1	5.0

LEGEND

Edb — Entering Dry Bulb
Ewb — Entering Wet Bulb
kW — Compressor Power Input
SCFM/BF — Standard Cubic Feet per Minute/Bypass Factor
SHC — Sensible Heat Capacity (1000 Btuh) Gross
TC — Total Capacity (1000 Btuh) Gross

48/50FE**12 Two Stage Cooling Capacities

48/50FE**12				AMBIENT TEMPERATURE (°F)														
				85			95			105			115			125		
				EA (db)			EA (db)			EA (db)			EA (db)			EA (db)		
				75	80	85	75	80	85	75	80	85	75	80	85	75	80	85
3000 cfm	EA (wb)	58	TC	106.2	106.2	120.5	100.9	100.9	114.7	95.3	95.3	108.4	89.3	89.3	101.8	82.9	82.9	94.9
			SHC	92.0	106.2	120.5	87.2	100.9	114.7	82.1	95.3	108.4	76.8	89.3	101.8	71.1	82.9	94.9
		62	TC	112.7	112.7	112.8	106.2	106.2	109.0	99.3	99.3	105.0	91.9	91.9	100.8	84.3	84.3	96.5
			SHC	82.2	97.5	112.8	78.4	93.7	109.0	74.5	89.7	105.0	70.3	85.6	100.8	66.1	81.3	96.5
		67	TC	124.5	124.5	124.5	117.4	117.4	117.4	110.0	110.0	110.0	102.0	102.0	102.0	93.8	93.8	93.8
			SHC	67.4	82.7	98.0	63.6	78.9	94.2	59.7	75.0	90.3	55.6	70.9	86.3	51.4	66.7	82.1
		72	TC	137.3	137.3	137.3	129.8	129.8	129.8	121.7	121.7	121.7	113.1	113.1	113.1	—	—	—
			SHC	52.3	67.6	82.9	48.5	63.8	79.2	44.6	59.9	75.2	40.6	55.9	71.2	—	—	—
		76	TC	—	148.3	148.3	—	140.2	140.2	—	131.7	131.7	—	122.6	122.6	—	—	—
			SHC	—	55.3	70.2	—	51.5	66.5	—	47.6	62.6	—	43.5	58.5	—	—	—
3500 cfm	EA (wb)	58	TC	112.9	112.9	127.8	107.2	107.2	121.6	101.2	101.2	115.0	94.8	94.8	108.0	88.0	88.0	100.5
			SHC	97.9	112.9	127.8	92.7	107.2	121.6	87.3	101.2	115.0	81.6	94.8	108.0	75.5	88.0	100.5
		62	TC	116.7	116.7	124.6	109.9	109.9	120.7	102.7	102.7	116.6	95.2	95.2	111.9	88.2	88.2	104.8
			SHC	89.3	107.0	124.6	85.4	103.1	120.7	81.3	99.0	116.6	77.0	94.4	111.9	71.4	88.2	104.8
		67	TC	128.4	128.4	128.4	121.1	121.1	121.1	113.3	113.3	113.3	105.0	105.0	105.0	96.4	96.4	96.4
			SHC	71.9	89.7	107.4	68.1	85.9	103.6	64.1	81.8	99.6	59.9	77.7	95.5	55.8	73.4	91.2
		72	TC	141.4	141.4	141.4	133.4	133.4	133.4	125.0	125.0	125.0	116.2	116.2	116.2	—	—	—
			SHC	54.2	71.9	89.7	50.4	68.1	85.9	46.4	64.1	81.9	42.3	60.0	77.7	—	—	—
		76	TC	—	152.5	152.5	—	144.0	144.0	—	135.1	135.1	—	125.7	125.7	—	—	—
			SHC	—	57.5	74.9	—	53.6	71.0	—	49.6	67.1	—	45.5	63.0	—	—	—
4000 cfm	EA (wb)	58	TC	118.4	118.4	134.0	112.4	112.4	127.5	106.0	106.0	120.5	99.3	99.3	113.1	92.2	92.2	105.2
			SHC	102.7	118.4	134.0	97.4	112.4	127.5	91.7	106.0	120.5	85.6	99.3	113.1	79.2	92.2	105.2
		62	TC	120.0	120.0	135.9	113.1	113.1	131.5	107.0	107.0	123.1	99.5	99.5	117.7	92.3	92.3	109.6
			SHC	96.0	115.9	135.9	91.9	111.7	131.5	85.9	104.5	123.1	81.1	99.5	117.7	75.0	92.3	109.6
		67	TC	131.6	131.6	131.6	123.9	123.9	123.9	115.8	115.8	115.8	107.3	107.3	107.3	98.4	98.4	100.0
			SHC	76.2	96.4	116.6	72.3	92.5	112.7	68.3	88.4	108.6	64.1	84.3	104.3	59.9	80.0	100.0
		72	TC	144.5	144.5	144.5	136.2	136.2	136.2	127.6	127.6	127.6	118.4	118.4	118.4	—	—	—
			SHC	55.9	76.0	96.2	52.0	72.1	92.2	48.0	68.1	88.3	43.8	63.9	84.1	—	—	—
		76	TC	—	155.6	155.6	—	146.9	146.9	—	137.7	137.7	—	128.0	128.0	—	—	—
			SHC	—	59.4	79.1	—	55.5	75.2	—	51.5	71.3	—	47.3	67.2	—	—	—
4500 cfm	EA (wb)	58	TC	123.0	123.0	139.3	116.8	116.8	132.3	110.1	110.1	125.0	103.1	103.1	117.2	95.7	95.7	109.1
			SHC	106.9	123.0	139.3	101.3	116.8	132.3	95.3	110.1	125.0	88.9	103.1	117.2	82.3	95.7	109.1
		62	TC	125.3	125.3	138.0	119.2	119.2	129.7	110.3	110.3	130.2	103.2	103.2	122.2	95.8	95.8	113.6
			SHC	98.3	118.2	138.0	92.2	111.0	129.7	90.3	110.3	130.2	84.3	103.2	122.2	77.9	95.8	113.6
		67	TC	134.0	134.0	134.0	126.2	126.2	126.2	117.8	117.8	117.8	109.1	109.1	113.1	100.0	100.0	108.7
			SHC	80.4	102.9	125.4	76.4	98.9	121.4	72.4	94.8	117.3	68.2	90.6	113.1	63.9	86.4	108.7
		72	TC	147.0	147.0	147.0	138.5	138.5	138.5	129.6	129.6	129.6	120.2	120.2	120.2	—	—	—
			SHC	57.4	79.9	102.4	53.4	75.9	98.4	49.4	71.9	94.4	45.2	67.7	90.3	—	—	—
		76	TC	—	158.1	158.1	—	149.1	149.1	—	139.7	139.7	—	129.7	129.7	—	—	—
			SHC	—	61.1	83.2	—	57.2	79.2	—	53.1	75.2	—	48.9	71.1	—	—	—
5000 cfm	EA (wb)	58	TC	127.0	127.0	143.7	120.6	120.6	136.5	113.7	113.7	129.0	106.3	106.3	120.8	98.6	98.6	112.3
			SHC	110.4	127.0	143.7	104.5	120.6	136.5	98.3	113.7	129.0	91.8	106.3	120.8	84.9	98.6	112.3
		62	TC	127.2	127.2	149.4	120.7	120.7	142.0	113.8	113.8	134.2	106.4	106.4	125.8	98.7	98.7	117.0
			SHC	105.0	127.2	149.4	99.3	120.7	142.0	93.4	113.8	134.2	87.0	106.4	125.8	80.4	98.7	117.0
		67	TC	135.9	135.9	135.9	128.0	128.0	130.1	119.5	119.5	125.9	110.6	110.6	121.5	—	—	—
			SHC	84.4	109.2	134.0	80.4	105.2	130.1	76.4	101.1	125.9	72.1	96.8	121.5	—	—	—
		72	TC	148.9	148.9	148.9	140.2	140.2	140.2	131.1	131.1	131.1	121.6	121.6	121.6	—	—	—
			SHC	58.7	83.6	108.4	54.8	79.6	104.5	50.7	75.5	100.4	46.6	71.3	96.1	—	—	—
		76	TC	—	160.1	160.1	—	150.9	150.9	—	141.2	141.2	—	131.1	131.1	—	—	—
			SHC	—	62.6	87.0	—	58.7	83.1	—	54.6	79.0	—	50.4	74.9	—	—	—

LEGEND

— — Do Not Operate
cfm — Cubic Feet Per Minute (Supply Air)
EA (db) — Entering Air Temperature (dry bulb)
EA (wb) — Entering Air Temperature (wet bulb)
SHC — Sensible Heat Capacity (1000 Btuh) Gross
TC — Total Capacity (1000 Btuh) Gross

NOTE: See minimum-maximum airflow ratings on page 8.

48/50FE**12 Single Stage Cooling Capacities

48/50FE**12				AMBIENT TEMPERATURE (°F)														
				85			95			105			115			125		
				EA (db)			EA (db)			EA (db)			EA (db)			EA (db)		
				75	80	85	75	80	85	75	80	85	75	80	85	75	80	85
1800 cfm	EA (wb)	58	TC	60.0	60.0	68.4	56.3	56.3	64.4	52.4	52.4	60.2	48.3	48.3	55.7	44.0	44.0	51.0
			SHC	51.6	60.0	68.4	48.2	56.3	64.4	44.7	52.4	60.2	40.9	48.3	55.7	36.9	44.0	51.0
		62	TC	62.6	62.6	66.5	58.2	58.2	63.6	53.6	53.6	60.7	48.7	48.7	57.5	44.0	44.0	53.4
			SHC	47.0	56.7	66.5	44.1	53.9	63.6	41.2	50.9	60.7	38.1	47.8	57.5	34.6	44.0	53.4
		67	TC	70.0	70.0	70.0	65.2	65.2	65.2	60.2	60.2	60.2	55.0	55.0	55.0	49.5	49.5	49.5
			SHC	38.1	47.8	57.6	35.2	45.0	54.8	32.3	42.1	51.8	29.3	39.1	48.8	26.2	36.0	45.8
		72	TC	77.9	77.9	77.9	72.9	72.9	72.9	67.6	67.6	67.6	62.0	62.0	62.0	56.1	56.1	56.1
			SHC	29.0	38.8	48.5	26.1	35.9	45.7	23.2	33.0	42.8	20.2	30.0	39.8	17.2	26.9	36.7
		76	TC	—	84.8	84.8	—	79.5	79.5	—	73.9	73.9	—	68.0	68.0	—	61.7	61.7
			SHC	—	31.4	41.0	—	28.5	38.2	—	25.6	35.3	—	22.6	32.3	—	19.6	29.2
2100 cfm	EA (wb)	58	TC	64.1	64.1	72.9	60.1	60.1	68.6	56.0	56.0	64.2	51.7	51.7	59.4	47.0	47.0	54.3
			SHC	55.2	64.1	72.9	51.6	60.1	68.6	47.8	56.0	64.2	43.9	51.7	59.4	39.6	47.0	54.3
		62	TC	65.0	65.0	74.1	60.4	60.4	71.1	56.1	56.1	67.0	51.7	51.7	62.1	47.1	47.1	56.9
			SHC	51.6	62.9	74.1	48.6	59.8	71.1	45.1	56.1	67.0	41.3	51.7	62.1	37.2	47.1	56.9
		67	TC	72.3	72.3	72.3	67.3	67.3	67.3	62.1	62.1	62.1	56.7	56.7	56.7	50.9	50.9	51.7
			SHC	41.1	52.5	63.8	38.2	49.5	60.9	35.2	46.6	57.9	32.2	43.5	54.9	29.0	40.4	51.7
		72	TC	80.2	80.2	80.2	75.0	75.0	75.0	69.5	69.5	69.5	63.7	63.7	63.7	57.6	57.6	57.6
			SHC	30.3	41.7	53.1	27.5	38.8	50.2	24.5	35.9	47.2	21.5	32.8	44.2	18.3	29.7	41.1
		76	TC	—	87.2	87.2	—	81.6	81.6	—	75.8	75.8	—	69.7	69.7	—	63.3	63.3
			SHC	—	33.0	44.2	—	30.1	41.3	—	27.1	38.4	—	24.1	35.4	—	21.0	32.3
2400 cfm	EA (wb)	58	TC	67.5	67.5	76.7	63.3	63.3	72.2	59.0	59.0	67.5	54.4	54.4	62.5	49.5	49.5	57.2
			SHC	58.2	67.5	76.7	54.4	63.3	72.2	50.5	59.0	67.5	46.3	54.4	62.5	41.9	49.5	57.2
		62	TC	67.5	67.5	79.9	63.4	63.4	75.2	59.0	59.0	70.4	54.5	54.5	65.4	49.5	49.5	59.7
			SHC	55.2	67.5	79.9	51.5	63.4	75.2	47.7	59.0	70.4	43.7	54.5	65.4	39.3	49.5	59.7
		67	TC	74.0	74.0	74.0	68.9	68.9	68.9	63.5	63.5	63.9	58.0	58.0	60.8	52.1	52.1	57.5
			SHC	44.0	56.9	69.8	41.0	53.9	66.9	38.0	50.9	63.9	34.9	47.8	60.8	31.8	44.7	57.5
		72	TC	82.0	82.0	82.0	76.6	76.6	76.6	70.9	70.9	70.9	65.0	65.0	65.0	58.7	58.7	58.7
			SHC	31.6	44.5	57.5	28.7	41.6	54.6	25.7	38.6	51.5	22.6	35.5	48.5	19.4	32.4	45.3
		76	TC	—	89.0	89.0	—	83.2	83.2	—	77.3	77.3	—	71.0	71.0	—	64.4	64.4
			SHC	—	34.5	47.3	—	31.5	44.3	—	28.6	41.4	—	25.5	38.3	—	22.3	35.2
2700 cfm	EA (wb)	58	TC	70.3	70.3	79.9	66.0	66.0	75.2	61.5	61.5	70.3	56.7	56.7	65.1	51.6	51.6	59.4
			SHC	60.8	70.3	79.9	56.9	66.0	75.2	52.7	61.5	70.3	48.4	56.7	65.1	43.7	51.6	59.4
		62	TC	70.5	70.5	83.2	66.1	66.1	78.4	61.6	61.6	73.3	56.8	56.8	68.0	51.7	51.7	62.2
			SHC	57.7	70.5	83.2	53.9	66.1	78.4	49.9	61.6	73.3	45.6	56.8	68.0	41.2	51.7	62.2
		67	TC	75.3	75.3	75.6	70.1	70.1	72.7	64.7	64.7	69.6	59.0	59.0	66.5	53.0	53.0	63.2
			SHC	46.7	61.2	75.6	43.7	58.2	72.7	40.7	55.2	69.6	37.6	52.0	66.5	34.4	48.8	63.2
		72	TC	83.4	83.4	83.4	77.8	77.8	77.8	72.0	72.0	72.0	65.9	65.9	65.9	59.5	59.5	59.5
			SHC	32.7	47.2	61.7	29.8	44.3	58.8	26.7	41.2	55.7	23.6	38.1	52.6	20.5	34.9	49.4
		76	TC	—	90.3	90.3	—	84.5	84.5	—	78.4	78.4	—	72.0	72.0	—	65.2	65.2
			SHC	—	35.8	50.1	—	32.9	47.2	—	29.9	44.2	—	26.8	41.2	—	23.6	38.0
3000 cfm	EA (wb)	58	TC	72.8	72.8	82.6	68.3	68.3	77.7	63.6	63.6	72.6	58.6	58.6	67.2	53.4	53.4	61.4
			SHC	63.0	72.8	82.6	58.8	68.3	77.7	54.6	63.6	72.6	50.1	58.6	67.2	45.3	53.4	61.4
		62	TC	72.8	72.8	85.9	68.4	68.4	81.0	63.7	63.7	75.7	58.7	58.7	70.1	53.4	53.4	64.2
			SHC	59.7	72.8	85.9	55.8	68.4	81.0	51.6	63.7	75.7	47.3	58.7	70.1	42.6	53.4	64.2
		67	TC	76.4	76.4	81.3	71.2	71.2	78.4	65.6	65.6	75.2	59.9	59.9	71.9	53.9	53.9	68.4
			SHC	49.4	65.3	81.3	46.4	62.4	78.4	43.3	59.3	75.2	40.2	56.1	71.9	36.9	52.6	68.4
		72	TC	84.5	84.5	84.5	78.8	78.8	78.8	72.9	72.9	72.9	66.7	66.7	66.7	60.2	60.2	60.2
			SHC	33.7	49.8	65.8	30.8	46.8	62.9	27.8	43.8	59.8	24.6	40.7	56.7	21.4	37.4	53.4
		76	TC	—	91.4	91.4	—	85.5	85.5	—	79.3	79.3	—	72.8	72.8	—	—	—
			SHC	—	37.1	52.9	—	34.1	50.0	—	31.1	47.0	—	28.0	43.9	—	—	—

LEGEND

— — Do Not Operate
cfm — Cubic Feet Per Minute (Supply Air)
EA (db) — Entering Air Temperature (dry bulb)
EA (wb) — Entering Air Temperature (wet bulb)
SHC — Sensible Heat Capacity (1000 Btuh) Gross
TC — Total Capacity (1000 Btuh) Gross

NOTE: See minimum-maximum airflow ratings on page 8.

48/50FE*N12 — Unit With Humidi-MiZer® System in Subcooling Mode — Cooling Capacities

TEMP (°F) AIR ENTERING CONDENSER (Edb)		AIR ENTERING EVAPORATOR — SCFM/BF (80°F db)								
		3000/0.06			4000/0.08			5000/0.10		
		Air Entering Evaporator — Ewb (°F)								
		72	67	62	72	67	62	72	67	62
75	TC	137.0	124.0	111.0	147.0	132.0	120.0	147.0	135.0	129.0
	SHC	58.0	78.0	97.0	72.0	96.0	117.0	78.0	110.0	125.0
	kW	9.6	9.4	9.2	9.8	9.6	9.4	9.8	9.7	9.6
85	TC	128.0	116.0	103.0	135.0	123.0	112.0	140.0	127.0	118.0
	SHC	51.0	72.0	89.0	61.0	88.0	109.0	72.0	104.0	118.0
	kW	10.4	10.3	10.0	10.6	10.4	10.2	10.7	10.5	10.3
95	TC	117.0	107.0	96.0	124.0	111.0	101.0	128.0	117.0	110.0
	SHC	41.0	63.0	83.0	52.0	77.0	98.0	62.0	95.0	110.0
	kW	11.3	11.1	10.9	11.4	11.2	11.0	11.5	11.3	11.2
105	TC	110.0	98.0	87.0	117.0	104.0	95.0	120.0	104.0	99.0
	SHC	35.0	55.0	76.0	46.0	72.0	89.0	55.0	83.0	99.0
	kW	12.3	12.1	11.9	12.5	12.2	12.0	12.6	12.2	12.2
115	TC	101.0	89.0	78.0	106.0	92.0	84.0	109.0	96.0	92.0
	SHC	28.0	48.0	68.0	37.0	61.0	82.0	46.0	77.0	92.0
	kW	13.4	13.2	13.0	13.6	13.3	13.1	13.6	13.4	13.3
125	TC	92.0	79.0	69.0	95.0	81.0	75.0	98.0	87.0	81.0
	SHC	20.0	39.0	60.0	28.0	52.0	74.0	37.0	69.0	81.0
	kW	14.7	14.4	14.2	14.8	14.4	14.3	14.8	14.6	14.5

48/50FE*N12 — Unit With Humidi-MiZer System in Hot Gas Reheat Mode — Cooling Capacities

TEMP (°F) AIR ENTERING CONDENSER (Edb)		AIR ENTERING EVAPORATOR — Ewb (°F)								
		75 Dry Bulb 62.5 Wet Bulb (50% Relative)			75 Dry Bulb 64 Wet Bulb (56% Relative)			75 Dry Bulb 65.3 Wet Bulb (60% Relative)		
		Air Entering Evaporator — cfm								
		3000	4000	5000	3000	4000	5000	3000	4000	5000
80	TC	45.0	49.0	52.0	46.0	51.0	53.0	48.0	52.0	54.0
	SHC	7.0	16.0	25.0	2.0	9.0	17.0	-3.0	4.0	10.0
	kW	7.4	7.6	7.7	7.6	7.7	7.7	7.7	7.8	7.8
75	TC	47.0	52.0	54.0	49.0	53.0	56.0	50.0	54.0	57.0
	SHC	9.0	18.0	28.0	4.0	12.0	20.0	0.0	7.0	14.0
	kW	6.8	6.9	6.9	6.9	6.9	7.0	7.0	7.1	7.1
70	TC	50.0	54.0	57.0	51.0	56.0	59.0	53.0	57.0	60.0
	SHC	11.0	20.0	30.0	5.0	14.0	22.0	2.0	8.0	15.0
	kW	6.7	6.7	6.7	6.7	6.7	6.7	6.7	6.8	6.8
60	TC	54.0	59.0	62.0	56.0	61.0	64.0	58.0	62.0	65.0
	SHC	15.0	25.0	35.0	9.0	18.0	26.0	5.0	12.0	19.0
	kW	6.6	6.6	6.7	6.6	6.7	6.7	6.7	6.7	6.7
50	TC	59.0	64.0	67.0	61.0	66.0	69.0	63.0	68.0	71.0
	SHC	19.0	29.0	39.0	13.0	22.0	31.0	9.0	16.0	24.0
	kW	6.6	6.6	6.6	6.6	6.6	6.6	6.6	6.6	6.6
40	TC	63.0	69.0	72.0	66.0	71.0	74.0	67.0	73.0	76.0
	SHC	23.0	33.0	44.0	17.0	26.0	35.0	13.0	20.0	28.0
	kW	6.6	6.6	6.6	6.6	6.6	6.6	6.6	6.6	6.6

LEGEND

Edb — Entering Dry Bulb
Ewb — Entering Wet Bulb
kW — Compressor Power Input
SCFM/BF — Standard Cubic Feet per Minute/Bypass Factor
SHC — Sensible Heat Capacity (1000 Btuh) Gross
TC — Total Capacity (1000 Btuh) Gross

48/50FE**14 Two Stage Cooling Capacities

48/50FE**14				AMBIENT TEMPERATURE (°F)														
				85			95			105			115			125		
				EA (db)			EA (db)			EA (db)			EA (db)			EA (db)		
				75	80	85	75	80	85	75	80	85	75	80	85	75	80	85
3750 cfm	EA (wb)	58	TC	132.4	132.4	150.1	126.1	126.1	143.2	119.3	119.3	135.8	112.1	112.1	127.8	104.4	104.4	119.3
			SHC	114.7	132.4	150.1	109.0	126.1	143.2	102.9	119.3	135.8	96.4	112.1	127.8	89.5	104.4	119.3
		62	TC	140.5	140.5	151.5	131.2	131.2	138.8	122.8	122.8	134.1	114.1	114.1	129.1	105.1	105.1	123.4
			SHC	110.5	131.0	151.5	99.0	118.9	138.8	94.3	114.2	134.1	89.4	109.2	129.1	84.1	103.8	123.4
		67	TC	153.2	153.2	153.2	144.9	144.9	144.9	136.2	136.2	136.2	126.4	126.4	126.4	116.6	116.6	116.6
			SHC	83.5	103.4	123.3	79.1	99.0	118.9	74.5	94.4	114.3	69.6	89.5	109.4	64.6	84.6	104.5
		72	TC	169.3	169.3	169.3	160.1	160.1	160.1	150.7	150.7	150.7	140.1	140.1	140.1	129.6	129.6	129.6
			SHC	63.7	83.2	102.7	59.1	78.7	98.3	54.5	74.1	93.8	49.5	69.2	88.9	44.5	64.3	84.1
		76	TC	—	182.8	182.8	—	172.9	172.9	—	163.0	163.0	—	151.9	151.9	—	—	—
			SHC	—	66.4	87.0	—	62.0	79.2	—	57.5	75.7	—	52.7	71.4	—	—	—
4400 cfm	EA (wb)	58	TC	140.5	140.5	159.1	133.8	133.8	151.7	126.6	126.6	143.9	118.9	118.9	135.3	110.6	110.6	126.3
			SHC	121.9	140.5	159.1	115.8	133.8	151.7	109.3	126.6	143.9	102.4	118.9	135.3	95.0	110.6	126.3
		62	TC	143.9	143.9	159.2	135.8	135.8	154.2	127.2	127.2	148.6	120.7	120.7	136.0	110.8	110.8	131.7
			SHC	113.0	136.1	159.2	108.2	131.2	154.2	103.1	125.8	148.6	94.6	115.3	136.0	89.9	110.8	131.7
		67	TC	157.9	157.9	157.9	149.2	149.2	149.2	140.3	140.3	140.3	130.0	130.0	130.0	119.7	119.7	119.7
			SHC	89.3	112.4	135.6	84.7	107.9	131.1	80.2	103.4	126.6	75.2	98.4	121.7	70.2	93.5	116.7
		72	TC	173.9	173.9	173.9	164.5	164.5	164.5	154.5	154.5	154.5	143.8	143.8	143.8	—	—	—
			SHC	65.4	88.2	111.1	60.8	83.7	106.6	56.0	79.0	102.0	51.1	74.1	97.1	—	—	—
		76	TC	—	187.8	187.8	—	177.6	177.6	—	167.0	167.0	—	155.7	155.7	—	—	—
			SHC	—	68.6	89.8	—	64.0	85.7	—	59.4	81.4	—	54.5	76.8	—	—	—
5000 cfm	EA (wb)	58	TC	146.8	146.8	166.2	139.7	139.7	158.3	132.1	132.1	150.0	123.9	123.9	141.0	115.4	115.4	131.6
			SHC	127.5	146.8	166.2	121.0	139.7	158.3	114.2	132.1	150.0	106.9	123.9	141.0	99.2	115.4	131.6
		62	TC	147.6	147.6	171.2	143.0	143.0	153.9	132.3	132.3	156.2	124.1	124.1	146.9	115.5	115.5	137.1
			SHC	120.3	145.8	171.2	109.6	131.8	153.9	108.3	132.3	156.2	101.3	124.1	146.9	93.8	115.5	137.1
		67	TC	161.7	161.7	161.7	152.4	152.4	152.4	143.0	143.0	143.0	132.6	132.6	132.7	121.9	121.9	127.6
			SHC	94.4	120.5	146.7	89.7	115.9	142.1	85.1	111.3	137.5	80.3	106.5	132.7	75.3	101.5	127.6
		72	TC	177.6	177.6	177.6	167.7	167.7	167.7	157.5	157.5	157.5	146.4	146.4	146.4	—	—	—
			SHC	66.6	92.5	118.4	61.9	87.9	113.8	57.1	83.1	109.1	52.1	78.2	104.2	—	—	—
		76	TC	—	191.4	191.4	—	180.9	180.9	—	170.4	170.4	—	158.4	158.4	—	—	—
			SHC	—	69.8	94.6	—	65.2	90.2	—	60.6	85.8	—	55.5	80.9	—	—	—
5650 cfm	EA (wb)	58	TC	152.6	152.6	172.6	145.1	145.1	164.4	137.1	137.1	155.6	128.6	128.6	146.2	119.7	119.7	136.3
			SHC	132.6	152.6	172.6	125.8	145.1	164.4	118.7	137.1	155.6	111.0	128.6	146.2	103.0	119.7	136.3
		62	TC	153.8	153.8	176.2	145.3	145.3	171.1	137.3	137.3	162.0	128.8	128.8	152.3	119.8	119.8	142.1
			SHC	124.3	150.3	176.2	119.5	145.3	171.1	112.6	137.3	162.0	105.2	128.8	152.3	97.5	119.8	142.1
		67	TC	164.4	164.4	164.4	155.2	155.2	155.2	146.1	146.1	148.3	134.7	134.7	144.2	123.9	123.9	139.2
			SHC	99.5	128.9	158.2	95.0	124.4	153.8	89.4	118.8	148.3	85.6	114.9	144.2	80.7	109.9	139.2
		72	TC	180.9	180.9	180.9	170.8	170.8	170.8	159.9	159.9	159.9	148.6	148.6	148.6	—	—	—
			SHC	67.5	96.6	125.8	62.8	92.0	121.1	57.9	87.1	116.3	52.9	82.2	111.4	—	—	—
		76	TC	—	194.8	194.8	—	184.2	184.2	—	172.5	172.5	—	160.7	160.7	—	—	—
			SHC	—	70.5	98.6	—	65.9	94.2	—	60.9	89.4	—	55.9	84.5	—	—	—
6250 cfm	EA (wb)	58	TC	157.2	157.2	177.8	149.5	149.5	169.2	141.2	141.2	160.1	132.3	132.3	150.4	123.1	123.1	140.1
			SHC	136.6	157.2	177.8	129.7	149.5	169.2	122.2	141.2	160.1	114.3	132.3	150.4	106.0	123.1	140.1
		62	TC	157.4	157.4	184.8	149.6	149.6	176.0	141.3	141.3	166.6	132.2	132.2	156.3	123.2	123.2	146.0
			SHC	129.9	157.4	184.8	123.2	149.6	176.0	116.0	141.3	166.6	108.2	132.2	156.3	100.4	123.2	146.0
		67	TC	168.3	168.3	171.9	157.1	157.1	164.1	147.0	147.0	159.5	136.4	136.4	154.5	125.4	125.4	149.3
			SHC	107.6	139.8	171.9	99.7	131.9	164.1	95.2	127.3	159.5	90.4	122.5	154.5	85.6	117.5	149.3
		72	TC	182.9	182.9	182.9	172.6	172.6	172.6	161.7	161.7	161.7	150.3	150.3	150.3	—	—	—
			SHC	67.7	99.8	131.9	63.0	95.1	127.3	58.2	90.4	122.5	53.3	85.5	117.6	—	—	—
		76	TC	—	197.6	197.6	—	185.9	185.9	—	174.5	174.5	—	163.0	163.0	—	—	—
			SHC	—	70.5	101.6	—	65.5	96.8	—	60.6	92.0	—	55.6	87.1	—	—	—

NOTE: See minimum-maximum airflow ratings on page 8.

LEGEND

— — Do Not Operate
cfm — Cubic Feet Per Minute (Supply Air)
EA (db) — Entering Air Temperature (dry bulb)
EA (wb) — Entering Air Temperature (wet bulb)
SHC — Sensible Heat Capacity (1000 Btuh) Gross
TC — Total Capacity (1000 Btuh) Gross

48/50FE**14 Single Stage Cooling Capacities

48/50FE**14				AMBIENT TEMPERATURE (°F)														
				85			95			105			115			125		
				EA (db)			EA (db)			EA (db)			EA (db)			EA (db)		
				75	80	85	75	80	85	75	80	85	75	80	85	75	80	85
2050 cfm	EA (wb)	58	TC	71.2	71.2	80.8	66.9	66.9	76.1	62.2	62.2	71.1	57.2	57.2	65.6	51.8	51.8	59.5
			SHC	61.5	71.2	80.8	57.6	66.9	76.1	53.4	62.2	71.1	48.9	57.2	65.6	44.0	51.8	59.5
		62	TC	74.1	74.1	78.5	68.9	68.9	75.4	63.3	63.3	72.0	58.5	58.5	65.4	51.9	51.9	62.2
			SHC	56.0	67.3	78.5	52.9	64.1	75.4	49.6	60.8	72.0	44.8	55.1	65.4	41.5	51.9	62.2
		67	TC	82.4	82.4	82.4	76.8	76.8	76.8	69.9	69.9	69.9	64.2	64.2	64.2	57.2	57.2	57.2
			SHC	45.4	56.7	68.0	42.3	53.6	64.8	38.8	49.9	61.1	35.6	46.7	57.8	32.0	42.9	53.9
		72	TC	91.5	91.5	91.5	85.3	85.3	85.3	78.7	78.7	78.7	71.7	71.7	71.7	63.8	63.8	63.8
			SHC	34.7	46.0	57.2	31.6	42.8	54.1	28.3	39.5	50.7	25.0	36.0	47.0	21.3	32.1	42.9
		76	TC	—	99.3	99.3	—	92.6	92.6	—	85.6	85.6	—	78.0	78.0	—	69.7	69.7
			SHC	—	37.2	48.5	—	34.1	45.4	—	30.8	42.0	—	27.3	38.0	—	23.4	33.5
2500 cfm	EA (wb)	58	TC	77.2	77.2	87.5	72.4	72.4	82.3	67.3	67.3	76.7	61.8	61.8	70.7	55.3	55.3	63.4
			SHC	66.8	77.2	87.5	62.5	72.4	82.3	57.9	67.3	76.7	53.0	61.8	70.7	47.2	55.3	63.4
		62	TC	79.0	79.0	87.0	72.5	72.5	85.8	67.4	67.4	80.0	61.9	61.9	73.7	55.7	55.7	66.6
			SHC	61.6	74.3	87.0	59.3	72.5	85.8	54.9	67.4	80.0	50.1	61.9	73.7	44.8	55.7	66.6
		67	TC	85.8	85.8	85.8	79.7	79.7	79.7	73.3	73.3	73.3	66.4	66.4	67.1	58.9	58.9	63.0
			SHC	50.0	63.7	77.5	46.8	60.6	74.3	43.5	57.2	70.8	40.0	53.6	67.1	36.2	49.6	63.0
		72	TC	95.0	95.0	95.0	88.4	88.4	88.4	81.3	81.3	81.3	72.7	72.7	72.7	65.8	65.8	65.8
			SHC	36.6	50.3	64.1	33.4	47.2	60.9	30.1	43.8	57.5	23.9	37.4	50.9	22.9	36.2	49.5
		76	TC	—	102.9	102.9	—	95.8	95.8	—	88.3	88.3	—	80.4	80.4	—	71.7	71.7
			SHC	—	39.5	53.2	—	36.3	50.0	—	33.0	46.7	—	29.4	42.8	—	25.4	38.3
2900 cfm	EA (wb)	58	TC	81.4	81.4	92.3	76.4	76.4	86.7	70.9	70.9	80.7	64.7	64.7	73.8	58.6	58.6	67.1
			SHC	70.6	81.4	92.3	66.0	76.4	86.7	61.1	70.9	80.7	55.5	64.7	73.8	50.0	58.6	67.1
		62	TC	81.5	81.5	96.0	76.5	76.5	90.3	71.0	71.0	84.1	65.1	65.1	77.4	58.6	58.6	70.0
			SHC	67.0	81.5	96.0	62.6	76.5	90.3	57.9	71.0	84.1	52.8	65.1	77.4	47.3	58.6	70.0
		67	TC	87.9	87.9	87.9	81.5	81.5	82.5	74.9	74.9	79.1	67.8	67.8	75.3	60.1	60.1	71.1
			SHC	53.8	69.8	85.7	50.6	66.6	82.5	47.3	63.2	79.1	43.8	59.5	75.3	39.9	55.5	71.1
		72	TC	97.2	97.2	97.2	90.3	90.3	90.3	83.1	83.1	83.1	75.1	75.1	75.1	67.0	67.0	67.0
			SHC	38.1	54.0	70.0	34.8	50.8	66.7	31.5	47.4	63.4	27.9	43.7	59.4	24.2	39.8	55.3
		76	TC	—	105.1	105.1	—	97.8	97.8	—	90.1	90.1	—	—	—	—	—	—
			SHC	—	41.2	57.1	—	38.0	53.9	—	34.6	50.5	—	—	—	—	—	—
3300 cfm	EA (wb)	58	TC	85.0	85.0	96.3	79.6	79.6	90.4	73.9	73.9	84.1	67.7	67.7	77.2	60.4	60.4	69.1
			SHC	73.7	85.0	96.3	68.9	79.6	90.4	63.8	73.9	84.1	58.2	67.7	77.2	51.7	60.4	69.1
		62	TC	85.1	85.1	100.2	79.7	79.7	94.1	74.0	74.0	87.5	67.6	67.6	80.3	60.8	60.8	72.6
			SHC	70.1	85.1	100.2	65.4	79.7	94.1	60.4	74.0	87.5	54.9	67.6	80.3	49.1	60.8	72.6
		67	TC	89.4	89.4	93.9	83.0	83.0	90.6	76.1	76.1	87.2	68.8	68.8	83.4	62.1	62.1	73.9
			SHC	57.6	75.7	93.9	54.4	72.5	90.6	51.1	69.2	87.2	47.5	65.5	83.4	41.6	57.8	73.9
		72	TC	98.8	98.8	98.8	91.8	91.8	91.8	84.3	84.3	84.3	76.4	76.4	76.4	67.8	67.8	67.8
			SHC	39.5	57.6	75.8	36.1	54.3	72.4	32.8	50.9	69.1	29.3	47.3	65.3	25.5	43.2	60.9
		76	TC	—	106.7	106.7	—	—	—	—	—	—	—	—	—	—	—	—
			SHC	—	42.8	60.9	—	—	—	—	—	—	—	—	—	—	—	—
3700 cfm	EA (wb)	58	TC	88.0	88.0	99.6	82.4	82.4	93.4	76.4	76.4	86.8	69.9	69.9	79.7	62.8	62.8	71.8
			SHC	76.4	88.0	99.6	71.3	82.4	93.4	66.0	76.4	86.8	60.2	69.9	79.7	53.8	62.8	71.8
		62	TC	88.1	88.1	103.6	82.5	82.5	97.2	76.5	76.5	90.4	69.8	69.8	82.8	62.8	62.8	74.8
			SHC	72.6	88.1	103.6	67.7	82.5	97.2	62.5	76.5	90.4	56.8	69.8	82.8	50.8	62.8	74.8
		67	TC	90.7	90.7	102.0	84.0	84.0	98.8	78.2	78.2	90.9	70.1	70.1	89.6	63.0	63.0	81.0
			SHC	61.4	81.7	102.0	58.2	78.5	98.8	53.2	72.0	90.9	50.6	70.1	89.6	45.0	63.0	81.0
		72	TC	100.1	100.1	100.1	92.9	92.9	92.9	85.3	85.3	85.3	78.2	78.2	78.2	68.5	68.5	68.5
			SHC	40.6	61.0	81.3	37.3	57.7	78.0	34.1	54.5	74.8	32.2	52.5	72.8	26.7	46.6	66.5
		76	TC	—	—	—	—	—	—	—	—	—	—	—	—	—	—	—
			SHC	—	—	—	—	—	—	—	—	—	—	—	—	—	—	—

LEGEND

— — Do Not Operate
cfm — Cubic Feet Per Minute (Supply Air)
EA (db) — Entering Air Temperature (dry bulb)
EA (wb) — Entering Air Temperature (wet bulb)
SHC — Sensible Heat Capacity (1000 Btuh) Gross
TC — Total Capacity (1000 Btuh) Gross

NOTE: See minimum-maximum airflow ratings on page 8.

48/50FE*N14 — Unit With Humidi-MiZer® System in Subcooling Mode — Cooling Capacities

TEMP (°F) AIR ENTERING CONDENSER (Edb)		AIR ENTERING EVAPORATOR — SCFM/BF (80°F db)								
		3750/0.11			5000/0.13			6250/0.15		
		Air Entering Evaporator — Ewb (°F)								
		72	67	62	72	67	62	72	67	62
75	TC	157.0	140.0	127.0	165.0	150.0	135.0	172.0	156.0	141.0
	SHC	64.0	82.0	101.0	74.0	99.0	122.0	85.0	114.0	138.0
	kW	12.4	12.0	11.8	12.6	12.3	12.0	12.8	12.4	12.1
85	TC	137.0	132.0	118.0	144.0	141.0	127.0	151.0	132.0	133.0
	SHC	46.0	75.0	93.0	55.0	91.0	114.0	66.0	92.0	129.0
	kW	13.0	13.1	12.8	13.2	13.4	13.0	13.4	12.9	13.2
95	TC	137.0	122.0	110.0	145.0	129.0	117.0	150.0	134.0	123.0
	SHC	47.0	66.0	86.0	57.0	80.0	105.0	66.0	95.0	120.0
	kW	14.7	14.3	14.0	14.9	14.5	14.2	15.0	14.6	14.3
105	TC	127.0	113.0	103.0	134.0	120.0	108.0	139.0	125.0	114.0
	SHC	39.0	58.0	74.0	48.0	73.0	97.0	56.0	86.0	110.0
	kW	15.9	15.6	15.3	16.1	15.8	15.5	16.3	15.9	15.6
115	TC	116.0	103.0	94.0	123.0	110.0	98.0	127.0	114.0	103.0
	SHC	29.0	50.0	66.0	38.0	64.0	89.0	46.0	76.0	102.0
	kW	17.3	16.9	11.7	17.5	17.1	16.8	17.6	17.2	16.9

48/50FE*N14 — Unit With Humidi-MiZer System in Hot Gas Reheat Mode — Cooling Capacities

TEMP (°F) AIR ENTERING CONDENSER (Edb)		AIR ENTERING EVAPORATOR — Ewb (°F)								
		75 Dry Bulb 62.5 Wet Bulb (50% Relative)			75 Dry Bulb 64 Wet Bulb (56% Relative)			75 Dry Bulb 65.3 Wet Bulb (60% Relative)		
		Air Entering Evaporator — cfm								
		3750	5000	6250	3750	5000	6250	3750	5000	6250
80	TC	54.0	59.0	62.0	56.0	61.0	64.0	58.0	63.0	66.0
	SHC	9.0	20.0	31.0	3.0	12.0	21.0	-3.0	5.0	13.0
	kW	10.9	11.0	11.1	11.0	11.1	11.1	11.0	11.1	11.2
75	TC	57.0	62.0	65.0	60.0	65.0	68.0	62.0	67.0	70.0
	SHC	13.0	24.0	35.0	7.0	16.0	25.0	2.0	9.0	17.0
	kW	10.5	10.6	10.6	10.6	10.6	10.7	10.6	10.7	10.8
70	TC	61.0	66.0	69.0	63.0	68.0	72.0	66.0	71.0	74.0
	SHC	17.0	28.0	39.0	12.0	21.0	30.0	7.0	15.0	22.0
	kW	10.1	10.2	10.3	10.2	10.3	10.3	10.2	10.3	10.4
60	TC	62.0	67.0	70.0	64.0	69.0	72.0	66.0	71.0	74.0
	SHC	16.0	27.0	38.0	10.0	19.0	28.0	4.0	12.0	20.0
	kW	11.0	11.3	11.5	11.1	11.4	11.6	11.3	11.5	11.7
50	TC	69.0	74.0	77.0	71.0	76.0	80.0	73.0	79.0	82.0
	SHC	23.0	34.0	45.0	17.0	26.0	35.0	11.0	19.0	27.0
	kW	10.2	10.4	10.6	10.3	10.5	10.7	10.4	10.7	10.8
40	TC	75.0	80.0	84.0	78.0	83.0	87.0	80.0	86.0	89.0
	SHC	31.0	41.0	52.0	25.0	34.0	43.0	19.0	27.0	35.0
	kW	9.4	9.7	9.8	9.6	9.8	10.0	9.7	9.9	10.1

LEGEND

Edb — Entering Dry Bulb
Ewb — Entering Wet Bulb
kW — Compressor Power Input
SCFM/BF — Standard Cubic Feet per Minute/Bypass Factor
SHC — Sensible Heat Capacity (1000 Btuh) Gross
TC — Total Capacity (1000 Btuh) Gross

48/50FE**16 Two Stage Cooling Capacities

48/50FE**16				AMBIENT TEMPERATURE (°F)														
				85			95			105			115			125		
				EA (db)			EA (db)			EA (db)			EA (db)			EA (db)		
				75	80	85	75	80	85	75	80	85	75	80	85	75	80	85
3750 cfm	EA (wb)	58	TC	148.3	148.3	161.5	139.6	139.6	155.2	130.2	130.2	148.9	121.5	121.5	139.5	112.5	112.5	129.6
			SHC	123.8	142.7	161.5	117.7	136.4	155.2	111.5	130.2	148.9	103.6	121.5	139.5	95.4	112.5	129.6
		62	TC	160.4	160.4	160.4	151.1	151.1	151.1	141.3	141.3	141.3	130.9	130.9	130.9	119.8	119.8	122.1
			SHC	109.8	128.8	147.8	103.8	122.8	141.7	97.6	116.5	135.4	91.1	110.0	128.9	84.4	103.3	122.1
		67	TC	177.3	177.3	177.3	167.5	167.5	167.5	157.0	157.0	157.0	145.9	145.9	145.9	134.2	134.2	134.2
			SHC	91.8	110.8	129.9	85.8	104.8	123.9	79.6	98.7	117.7	73.3	92.3	111.2	66.7	85.6	104.6
		72	TC	196.2	196.2	196.2	185.6	185.6	185.6	174.4	174.4	174.4	162.5	162.5	162.5	149.9	149.9	149.9
			SHC	73.5	92.5	111.6	67.6	86.6	105.6	61.4	80.4	99.3	55.1	74.0	92.9	48.5	67.4	86.3
		76	TC	—	212.2	212.2	—	201.0	201.0	—	189.1	189.1	—	176.4	176.4	—	163.2	163.2
			SHC	—	77.6	98.2	—	71.6	92.2	—	65.4	83.7	—	59.0	77.4	—	52.5	71.0
4150 cfm	EA (wb)	58	TC	153.0	153.0	171.5	144.2	144.2	164.3	135.7	135.7	155.1	126.9	126.9	145.4	117.5	117.5	135.2
			SHC	130.7	151.1	171.5	124.1	144.2	164.3	116.4	135.7	155.1	108.4	126.9	145.4	99.9	117.5	135.2
		62	TC	164.8	164.8	164.8	155.2	155.2	155.2	145.1	145.1	145.1	134.4	134.4	138.0	123.1	123.1	131.0
			SHC	115.6	136.3	157.1	109.4	130.2	150.9	103.1	123.8	144.5	96.7	117.3	138.0	89.9	110.4	131.0
		67	TC	182.0	182.0	182.0	171.8	171.8	171.8	161.0	161.0	161.0	149.5	149.5	149.5	137.4	137.4	137.4
			SHC	95.6	116.5	137.4	89.6	110.4	131.3	83.3	104.2	125.0	76.9	97.7	118.5	70.2	90.9	111.7
		72	TC	201.1	201.1	201.1	190.1	190.1	190.1	178.4	178.4	178.4	166.2	166.2	166.2	153.2	153.2	153.2
			SHC	75.4	96.2	117.1	69.3	90.1	110.9	63.0	83.8	104.6	56.6	77.4	98.1	50.0	70.7	91.4
		76	TC	—	217.2	217.2	—	205.5	205.5	—	193.1	193.1	—	180.1	180.1	—	166.4	166.4
			SHC	—	79.6	99.2	—	73.5	93.5	—	67.2	87.3	—	60.7	81.0	—	54.1	74.4
4500 cfm	EA (wb)	58	TC	157.0	157.0	178.3	148.9	148.9	169.5	140.2	140.2	160.1	131.1	131.1	150.2	121.5	121.5	139.6
			SHC	135.7	157.0	178.3	128.2	148.9	169.5	120.4	140.2	160.1	112.1	131.1	150.2	103.4	121.5	139.6
		62	TC	168.2	168.2	168.2	158.4	158.4	158.8	148.0	148.0	152.3	137.1	137.1	145.6	125.6	125.6	138.6
			SHC	120.3	142.6	164.9	114.2	136.5	158.8	107.8	130.1	152.3	101.3	123.4	145.6	94.4	116.5	138.6
		67	TC	185.5	185.5	185.5	175.0	175.0	175.0	164.0	164.0	164.0	152.2	152.2	152.2	139.8	139.8	139.8
			SHC	98.8	121.2	143.7	92.7	115.1	137.5	86.4	108.8	131.1	79.8	102.2	124.5	73.1	95.4	117.7
		72	TC	204.7	204.7	204.7	193.4	193.4	193.4	181.4	181.4	181.4	168.9	168.9	168.9	155.6	155.6	155.6
			SHC	76.8	99.2	121.6	70.6	93.0	115.3	64.3	86.7	109.0	57.8	80.1	102.4	51.1	73.4	95.7
		76	TC	—	220.9	220.9	—	208.9	208.9	—	196.2	196.2	—	182.8	182.8	—	168.8	168.8
			SHC	—	81.1	102.5	—	74.9	96.5	—	68.6	90.3	—	62.0	83.8	—	55.4	77.1
5250 cfm	EA (wb)	58	TC	166.3	166.3	188.7	157.6	157.6	179.3	148.6	148.6	169.4	139.1	139.1	159.0	128.9	128.9	147.9
			SHC	143.9	166.3	188.7	136.0	157.6	179.3	127.8	148.6	169.4	119.2	139.1	159.0	110.0	128.9	147.9
		62	TC	174.2	174.2	181.0	164.1	164.1	174.7	153.3	153.3	168.0	141.9	141.9	160.8	130.1	130.1	152.7
			SHC	130.1	155.6	181.0	123.9	149.3	174.7	117.4	142.7	168.0	110.5	135.6	160.8	103.1	127.9	152.7
		67	TC	191.6	191.6	191.6	180.7	180.7	180.7	169.1	169.1	169.1	156.9	156.9	156.9	143.9	143.9	143.9
			SHC	105.0	130.7	156.4	98.7	124.4	150.0	92.3	117.9	143.5	85.7	111.2	136.8	78.8	104.3	129.8
		72	TC	210.9	210.9	210.9	199.1	199.1	199.1	186.7	186.7	186.7	173.4	173.4	173.4	159.7	159.7	159.7
			SHC	79.2	104.8	130.4	73.0	98.5	124.1	66.6	92.1	117.7	59.9	85.5	111.0	53.1	78.6	104.1
		76	TC	—	227.1	227.1	—	214.6	214.6	—	201.4	201.4	—	187.4	187.4	—	173.0	173.0
			SHC	—	83.7	108.4	—	77.4	102.2	—	71.0	95.8	—	64.3	89.2	—	57.5	82.4
6000 cfm	EA (wb)	58	TC	174.3	174.3	197.6	165.4	165.4	187.9	155.9	155.9	177.5	145.8	145.8	166.4	135.1	135.1	154.8
			SHC	151.0	174.3	197.6	142.9	165.4	187.9	134.3	155.9	177.5	125.1	145.8	166.4	115.5	135.1	154.8
		62	TC	179.1	179.1	196.2	168.6	168.6	189.3	157.6	157.6	181.9	146.1	146.1	173.8	135.3	135.3	161.5
			SHC	139.3	167.7	196.2	132.7	161.0	189.3	125.8	153.9	181.9	118.5	146.1	173.8	109.1	135.3	161.5
		67	TC	196.4	196.4	196.4	185.1	185.1	185.1	173.1	173.1	173.1	160.5	160.5	160.5	147.1	147.1	147.1
			SHC	110.6	139.4	168.3	104.3	133.1	161.9	97.8	126.5	155.2	91.1	119.7	148.3	84.1	112.7	141.2
		72	TC	215.7	215.7	215.7	203.5	203.5	203.5	190.6	190.6	190.6	177.0	177.0	177.0	162.9	162.9	162.9
			SHC	81.0	109.8	138.6	74.8	103.5	132.2	68.3	96.9	125.6	61.5	90.2	118.8	54.7	83.2	111.8
		76	TC	—	232.0	232.0	—	219.0	219.0	—	205.4	205.4	—	191.0	191.0	—	176.1	176.1
			SHC	—	85.6	113.5	—	79.3	107.2	—	72.7	100.7	—	66.0	93.9	—	59.1	87.0
6750 cfm	EA (wb)	58	TC	181.1	181.1	205.1	171.8	171.8	195.0	161.9	161.9	184.2	151.3	151.3	172.6	140.2	140.2	160.4
			SHC	157.0	181.1	205.1	148.6	171.8	195.0	139.6	161.9	184.2	130.0	151.3	172.6	120.0	140.2	160.4
		62	TC	183.3	183.3	209.6	172.6	172.6	202.3	162.1	162.1	191.9	151.5	151.5	180.0	140.4	140.4	167.4
			SHC	147.4	178.5	209.6	140.7	171.5	202.3	132.3	162.1	191.9	123.1	151.5	180.0	113.4	140.4	167.4
		67	TC	200.3	200.3	200.3	188.6	188.6	188.6	176.3	176.3	176.3	163.4	163.4	163.4	149.8	149.8	152.1
			SHC	115.8	147.7	179.5	109.5	141.3	173.1	102.9	134.6	166.3	96.1	127.7	159.3	89.2	120.6	152.1
		72	TC	219.6	219.6	219.6	207.0	207.0	207.0	193.8	193.8	193.8	179.9	179.9	179.9	165.5	165.5	165.5
			SHC	82.5	114.3	146.1	76.1	107.8	139.6	69.5	101.2	132.9	62.8	94.4	126.0	55.9	87.4	119.0
		76	TC	—	235.9	235.9	—	222.6	222.6	—	208.6	208.6	—	193.8	193.8	—	178.5	178.5
			SHC	—	86.9	117.8	—	80.5	111.4	—	73.9	104.8	—	67.0	97.9	—	60.0	90.8

48/50FE**16 Two Stage Cooling Capacities (cont)

48/50FE**16				AMBIENT TEMPERATURE (°F)														
				85			95			105			115			125		
				EA (db)			EA (db)			EA (db)			EA (db)			EA (db)		
				75	80	85	75	80	85	75	80	85	75	80	85	75	80	85
7150 cfm	EA (wb)	58	TC	184.3	184.3	208.7	174.6	174.6	198.1	164.7	164.7	187.3	154.0	154.0	175.6	142.6	142.6	163.1
			SHC	159.9	184.3	208.7	151.0	174.6	198.1	142.1	164.7	187.3	132.4	154.0	175.6	122.1	142.6	163.1
		62	TC	185.4	185.4	216.0	179.1	179.1	189.9	167.9	167.9	183.0	154.2	154.2	183.0	142.8	142.8	170.1
			SHC	151.4	183.7	216.0	135.4	162.6	189.9	128.7	155.8	183.0	125.3	154.2	183.0	115.4	142.8	170.1
		67	TC	202.1	202.1	202.1	190.3	190.3	190.3	177.8	177.8	177.8	164.8	164.8	164.9	151.0	151.0	157.7
			SHC	118.4	151.9	185.3	112.1	145.4	178.8	105.5	138.7	172.0	98.7	131.8	164.9	91.8	124.7	157.7
		72	TC	221.3	221.3	221.3	208.6	208.6	208.6	195.3	195.3	195.3	181.2	181.2	181.2	166.7	166.7	166.7
			SHC	83.0	116.4	149.8	76.6	109.9	143.3	70.0	103.3	136.6	63.2	96.4	129.6	56.3	89.4	122.5
		76	TC	—	237.6	237.6	—	224.2	224.2	—	210.0	210.0	—	195.1	195.1	—	179.7	179.7
			SHC	—	87.4	119.9	—	80.9	113.4	—	74.2	106.7	—	67.4	99.8	—	60.3	92.6
7500 cfm	EA (wb)	58	TC	187.0	187.0	211.7	177.3	177.3	201.1	167.0	167.0	189.9	156.1	156.1	178.0	144.9	144.9	165.4
			SHC	162.2	187.0	211.7	153.4	177.3	201.1	144.1	167.0	189.9	134.3	156.1	178.0	124.3	144.9	165.4
		62	TC	191.3	191.3	203.3	181.7	181.7	191.1	167.2	167.2	197.7	156.2	156.2	185.4	144.7	144.7	172.4
			SHC	145.7	174.5	203.3	136.5	163.8	191.1	136.6	167.2	197.7	127.1	156.2	185.4	117.1	144.7	172.4
		67	TC	203.5	203.5	203.5	191.6	191.6	191.6	179.0	179.0	179.0	165.9	165.9	169.7	152.0	152.0	162.5
			SHC	120.7	155.4	190.2	114.3	149.0	183.6	107.7	142.3	176.8	100.9	135.3	169.7	94.0	128.3	162.5
		72	TC	222.7	222.7	222.7	209.9	209.9	209.9	196.4	196.4	196.4	182.3	182.3	182.3	167.6	167.6	167.6
			SHC	83.4	118.1	152.9	77.0	111.7	146.4	70.4	105.0	139.6	63.6	98.1	132.7	56.7	91.1	125.5
		76	TC	—	239.0	239.0	—	225.4	225.4	—	211.2	211.2	—	196.1	196.1	—	180.6	180.6
			SHC	—	87.7	121.5	—	81.1	114.9	—	74.4	108.2	—	67.5	101.2	—	60.4	94.0

LEGEND

— — Do Not Operate
cfm — Cubic Feet Per Minute (Supply Air)
EA (db) — Entering Air Temperature (dry bulb)
EA (wb) — Entering Air Temperature (wet bulb)
SHC — Sensible Heat Capacity (1000 Btuh) Gross
TC — Total Capacity (1000 Btuh) Gross

NOTE: See minimum-maximum airflow ratings on page 8.

48/50FE**16 Single Stage Cooling Capacities

48/50FE**16				AMBIENT TEMPERATURE (°F)														
				85			95			105			115			125		
				EA (db)			EA (db)			EA (db)			EA (db)			EA (db)		
				75	80	85	75	80	85	75	80	85	75	80	85	75	80	85
2050 Cfm	EA (wb)	58	TC	89.7	89.7	92.5	83.8	83.8	88.1	77.6	77.6	83.6	71.1	71.1	78.9	64.3	64.3	73.9
			SHC	71.1	81.8	92.5	66.8	77.5	88.1	62.3	73.0	83.6	57.6	68.3	78.9	52.8	63.3	73.9
		62	TC	98.5	98.5	98.5	92.3	92.3	92.3	85.7	85.7	85.7	78.9	78.9	78.9	71.6	71.6	71.6
			SHC	64.0	74.7	85.4	59.6	70.3	81.0	55.1	65.9	76.6	50.5	61.2	71.9	45.7	56.4	67.1
		67	TC	110.5	110.5	110.5	104.0	104.0	104.0	97.1	97.1	97.1	89.7	89.7	89.7	81.8	81.8	81.8
			SHC	54.8	65.5	76.3	50.4	61.1	71.9	45.9	56.6	67.3	41.2	52.0	62.7	36.4	47.1	57.8
		72	TC	123.8	123.8	123.8	116.7	116.7	116.7	109.2	109.2	109.2	101.4	101.4	101.4	93.0	93.0	93.0
			SHC	45.4	56.1	66.8	41.0	51.7	62.4	36.4	47.1	57.8	31.8	42.5	53.2	27.0	37.6	48.3
		76	TC	—	135.0	135.0	—	127.6	127.6	—	119.7	119.7	—	111.4	111.4	—	102.5	102.5
			SHC	—	48.2	59.5	—	43.9	55.1	—	39.3	50.6	—	34.7	46.0	—	29.9	41.1
2250 Cfm	EA (wb)	58	TC	92.9	92.9	98.7	86.8	86.8	94.2	80.4	80.4	89.5	73.8	73.8	84.4	67.2	67.2	78.4
			SHC	75.4	87.0	98.7	71.0	82.6	94.2	66.4	77.9	89.5	61.5	73.0	84.4	56.0	67.2	78.4
		62	TC	101.8	101.8	101.8	95.4	95.4	95.4	88.6	88.6	88.6	81.5	81.5	81.5	73.9	73.9	73.9
			SHC	67.5	79.2	90.9	63.0	74.7	86.4	58.5	70.2	81.8	53.7	65.4	77.1	48.8	60.5	72.2
		67	TC	114.1	114.1	114.1	107.2	107.2	107.2	100.0	100.0	100.0	92.3	92.3	92.3	84.2	84.2	84.2
			SHC	57.3	69.0	80.7	52.8	64.5	76.2	48.2	59.9	71.6	43.5	55.2	66.9	38.6	50.2	61.9
		72	TC	127.4	127.4	127.4	120.1	120.1	120.1	112.4	112.4	112.4	104.2	104.2	104.2	95.5	95.5	95.5
			SHC	46.8	58.5	70.1	42.3	54.0	65.6	37.7	49.4	61.0	33.0	44.6	56.3	28.1	39.7	51.3
		76	TC	—	138.8	138.8	—	131.0	131.0	—	122.8	122.8	—	114.1	114.1	—	105.0	105.0
			SHC	—	49.8	62.2	—	45.3	57.7	—	40.7	53.1	—	35.9	48.3	—	31.1	42.1
2500 Cfm	EA (wb)	58	TC	96.4	96.4	106.0	90.2	90.2	101.3	83.5	83.5	96.2	77.6	77.6	89.7	71.2	71.2	82.8
			SHC	80.4	93.2	106.0	75.9	88.6	101.3	70.8	83.5	96.2	65.5	77.6	89.7	59.6	71.2	82.8
		62	TC	105.4	105.4	105.4	98.7	98.7	98.7	91.7	91.7	91.7	84.3	84.3	84.3	76.4	76.4	78.3
			SHC	71.6	84.5	97.4	67.1	80.0	92.9	62.4	75.3	88.2	57.6	70.5	83.4	52.6	65.5	78.3
		67	TC	117.8	117.8	117.8	110.7	110.7	110.7	103.2	103.2	103.2	95.2	95.2	95.2	86.8	86.8	86.8
			SHC	60.1	73.0	86.0	55.6	68.5	81.4	50.9	63.8	76.7	46.1	58.9	71.8	41.1	53.9	66.8
		72	TC	131.3	131.3	131.3	123.6	123.6	123.6	115.6	115.6	115.6	107.1	107.1	107.1	98.1	98.1	98.1
			SHC	48.4	61.2	74.1	43.8	56.7	69.5	39.1	52.0	64.8	34.3	47.1	59.9	29.3	42.1	55.0
		76	TC	—	142.7	142.7	—	134.6	134.6	—	126.1	126.1	—	117.0	117.0	—	107.6	107.6
			SHC	—	51.5	65.2	—	46.9	60.7	—	42.2	56.0	—	37.4	49.6	—	32.4	44.8
2900 Cfm	EA (wb)	58	TC	101.7	101.7	115.9	95.9	95.9	109.7	89.8	89.8	103.1	83.4	83.4	96.2	76.6	76.6	88.8
			SHC	87.4	101.7	115.9	82.1	95.9	109.7	76.5	89.8	103.1	70.6	83.4	96.2	64.4	76.6	88.8
		62	TC	110.1	110.1	110.1	103.0	103.0	103.0	95.7	95.7	97.9	87.9	87.9	92.9	79.6	79.6	87.6
			SHC	77.9	92.6	107.4	73.2	88.0	102.7	68.4	83.2	97.9	63.4	78.2	92.9	58.3	72.9	87.6
		67	TC	122.6	122.6	122.6	115.1	115.1	115.1	107.2	107.2	107.2	98.9	98.9	98.9	90.0	90.0	90.0
			SHC	64.3	79.1	93.9	59.6	74.4	89.2	54.8	69.6	84.4	49.9	64.6	79.4	44.8	59.5	74.3
		72	TC	136.2	136.2	136.2	128.2	128.2	128.2	119.8	119.8	119.8	110.8	110.8	110.8	101.3	101.3	101.3
			SHC	50.5	65.2	79.9	45.8	60.5	75.3	41.0	55.7	70.5	36.1	50.8	65.5	31.0	45.7	60.4
		76	TC	—	147.6	147.6	—	139.2	139.2	—	130.3	130.3	—	120.8	120.8	—	111.0	111.0
			SHC	—	53.8	67.3	—	49.1	63.1	—	44.3	58.4	—	39.4	53.6	—	34.4	48.6
3300 Cfm	EA (wb)	58	TC	107.6	107.6	122.5	101.5	101.5	115.9	95.1	95.1	109.0	88.3	88.3	101.7	81.1	81.1	93.8
			SHC	92.7	107.6	122.5	87.1	101.5	115.9	81.2	95.1	109.0	75.0	88.3	101.7	68.5	81.1	93.8
		62	TC	113.8	113.8	116.9	106.5	106.5	112.0	98.8	98.8	107.0	90.8	90.8	101.7	82.4	82.4	96.1
			SHC	83.6	100.3	116.9	78.8	95.4	112.0	73.9	90.4	107.0	68.8	85.3	101.7	63.4	79.8	96.1
		67	TC	126.4	126.4	126.4	118.6	118.6	118.6	110.4	110.4	110.4	101.8	101.8	101.8	92.6	92.6	92.6
			SHC	68.1	84.7	101.4	63.3	80.0	96.6	58.5	75.1	91.7	53.4	70.0	86.6	48.2	64.8	81.3
		72	TC	140.1	140.1	140.1	131.6	131.6	131.6	122.9	122.9	122.9	113.5	113.5	113.5	103.9	103.9	103.9
			SHC	52.2	68.8	85.4	47.5	64.0	80.6	42.6	59.2	75.7	37.6	54.1	70.7	32.5	49.0	65.5
		76	TC	—	151.5	151.5	—	142.7	142.7	—	133.6	133.6	—	123.7	123.7	—	113.7	113.7
			SHC	—	55.7	71.5	—	51.0	66.9	—	46.2	62.1	—	41.1	57.1	—	36.0	52.1
3700 Cfm	EA (wb)	58	TC	112.7	112.7	128.2	106.3	106.3	121.3	99.6	99.6	114.0	92.5	92.5	106.3	85.0	85.0	98.1
			SHC	97.3	112.7	128.2	91.4	106.3	121.3	85.2	99.6	114.0	78.8	92.5	106.3	71.9	85.0	98.1
		62	TC	116.9	116.9	125.7	109.4	109.4	120.7	101.6	101.6	115.4	93.5	93.5	109.6	85.2	85.2	102.7
			SHC	89.0	107.4	125.7	84.1	102.4	120.7	79.0	97.2	115.4	73.7	91.7	109.6	67.6	85.2	102.7
		67	TC	129.5	129.5	129.5	121.5	121.5	121.5	113.0	113.0	113.0	104.1	104.1	104.1	94.7	94.7	94.7
			SHC	71.6	90.1	108.5	66.8	85.2	103.7	61.9	80.3	98.7	56.7	75.1	93.5	51.5	69.8	88.2
		72	TC	143.0	143.0	143.0	134.4	134.4	134.4	125.4	125.4	125.4	115.9	115.9	115.9	106.0	106.0	106.0
			SHC	53.7	72.1	90.5	48.9	67.3	85.7	44.0	62.3	80.7	38.9	57.2	75.6	33.7	52.0	70.3
		76	TC	—	154.6	154.6	—	145.6	145.6	—	136.1	136.1	—	126.3	126.3	—	115.8	115.8
			SHC	—	57.4	75.1	—	52.7	70.4	—	47.7	65.5	—	42.7	60.5	—	37.5	55.3

Performance data (cont)

48/50FE**16 Single Stage Cooling Capacities (cont)

48/50FE**16				AMBIENT TEMPERATURE (°F)														
				85			95			105			115			125		
				EA (db)			EA (db)			EA (db)			EA (db)			EA (db)		
				75	80	85	75	80	85	75	80	85	75	80	85	75	80	85
3900 Cfm	EA (wb)	58	TC	115.0	115.0	130.7	108.5	108.5	123.7	101.6	101.6	116.2	94.4	94.4	108.4	86.8	86.8	100.1
			SHC	99.3	115.0	130.7	93.3	108.5	123.7	87.0	101.6	116.2	80.5	94.4	108.4	73.5	86.8	100.1
		62	TC	118.3	118.3	129.9	110.7	110.7	124.8	102.9	102.9	119.2	94.7	94.7	113.4	86.9	86.9	104.7
			SHC	91.6	110.7	129.9	86.6	105.7	124.8	81.4	100.3	119.2	75.9	94.7	113.4	69.1	86.9	104.7
		67	TC	130.8	130.8	130.8	122.7	122.7	122.7	114.1	114.1	114.1	105.1	105.1	105.1	95.6	95.6	95.6
			SHC	73.3	92.6	112.0	68.4	87.8	107.1	63.5	82.7	102.0	58.3	77.6	96.8	53.1	72.3	91.5
		72	TC	144.3	144.3	144.3	135.7	135.7	135.7	126.6	126.6	126.6	116.7	116.7	116.7	106.8	106.8	106.8
			SHC	54.4	73.7	92.9	49.6	68.9	88.1	44.7	63.9	83.1	39.5	58.7	77.9	34.3	53.5	72.7
		76	TC	—	155.9	155.9	—	146.8	146.8	—	137.3	137.3	—	127.3	127.3	—	116.7	116.7
			SHC	—	58.2	76.8	—	53.4	72.0	—	48.5	67.1	—	43.4	62.1	—	38.2	56.9
4150 Cfm	EA (wb)	58	TC	117.6	117.6	133.6	111.0	111.0	126.4	104.0	104.0	118.8	96.6	96.6	110.9	88.6	88.6	102.1
			SHC	101.6	117.6	133.6	95.5	111.0	126.4	89.1	104.0	118.8	82.4	96.6	110.9	75.1	88.6	102.1
		62	TC	119.9	119.9	134.9	112.3	112.3	129.5	104.3	104.3	124.2	96.7	96.7	115.7	88.9	88.9	107.0
			SHC	94.6	114.8	134.9	89.5	109.5	129.5	84.4	104.3	124.2	77.7	96.7	115.7	70.8	88.9	107.0
		67	TC	132.3	132.3	132.3	124.1	124.1	124.1	115.4	115.4	115.4	106.2	106.2	106.2	96.6	96.6	96.6
			SHC	75.3	95.8	116.2	70.5	90.9	111.3	65.5	85.8	106.2	60.3	80.6	100.9	55.0	75.2	95.5
		72	TC	145.8	145.8	145.8	137.1	137.1	137.1	127.8	127.8	127.8	118.0	118.0	118.0	107.9	107.9	107.9
			SHC	55.2	75.6	95.9	50.4	70.7	91.1	45.4	65.7	86.0	40.2	60.5	80.8	35.0	55.3	75.5
		76	TC	—	157.5	157.5	—	148.2	148.2	—	138.6	138.6	—	128.5	128.5	—	117.7	117.7
			SHC	—	59.1	78.8	—	54.3	73.9	—	49.3	69.0	—	44.3	64.0	—	39.0	58.7

LEGEND

— — Do Not Operate
cfm — Cubic Feet Per Minute (Supply Air)
EA (db) — Entering Air Temperature (dry bulb)
EA (wb) — Entering Air Temperature (wet bulb)
SHC — Sensible Heat Capacity (1000 Btuh) Gross
TC — Total Capacity (1000 Btuh) Gross

NOTE: See minimum-maximum airflow ratings on page 8.

48/50FE*N16 — Unit With Humidi-MiZer® System in Subcooling Mode — Cooling Capacities

TEMP (°F) AIR ENTERING CONDENSER (Edb)		AIR ENTERING EVAPORATOR — SCFM/BF (80°F db)								
		4500/0.09			6000/0.12			7500/0.14		
		Air Entering Evaporator — Ewb (°F)								
		72	67	62	72	67	62	72	67	62
75	TC	203.0	181.0	162.0	213.0	196.0	175.0	225.0	202.0	183.0
	SHC	82.0	103.0	124.0	93.0	125.0	152.0	109.0	142.0	175.0
	kW	14.1	13.7	13.4	14.2	14.1	13.7	14.5	14.1	13.8
85	TC	190.0	168.0	149.0	202.0	181.0	161.0	210.0	189.0	169.0
	SHC	70.0	91.0	113.0	83.0	112.0	139.0	95.0	130.0	162.0
	kW	15.3	14.9	14.6	15.5	15.2	14.8	15.7	15.3	14.9
95	TC	176.0	155.0	137.0	187.0	166.0	148.0	195.0	174.0	155.0
	SHC	57.0	79.0	102.0	70.0	98.0	127.0	81.0	117.0	149.0
	kW	16.6	16.2	15.9	16.9	16.5	16.1	17.0	16.7	16.3
105	TC	161.0	141.0	124.0	172.0	152.0	134.0	179.0	159.0	141.0
	SHC	44.0	67.0	90.0	56.0	85.0	114.0	67.0	103.0	135.0
	kW	18.1	17.7	17.4	18.4	17.9	17.6	18.5	18.1	17.8
115	TC	146.0	127.0	110.0	156.0	137.0	120.0	162.0	143.0	126.0
	SHC	31.0	54.0	78.0	42.0	73.0	101.0	52.0	89.0	121.0
	kW	19.8	19.4	19.1	20.0	19.7	19.3	20.2	19.8	19.4
125	TC	130.0	113.0	97.0	139.0	121.0	105.0	145.0	127.0	110.0
	SHC	18.0	42.0	65.0	28.0	59.0	88.0	37.0	75.0	106.0
	kW	21.6	21.2	20.8	21.8	21.4	21.0	21.9	21.6	21.1

48/50FE*N16 — Unit With Humidi-MiZer System in Hot Gas Reheat Mode — Cooling Capacities

TEMP (°F) AIR ENTERING CONDENSER (Edb)		AIR ENTERING EVAPORATOR — Ewb (°F)								
		75 Dry Bulb 62.5 Wet Bulb (50% Relative)			75 Dry Bulb 64 Wet Bulb (56% Relative)			75 Dry Bulb 65.3 Wet Bulb (60% Relative)		
		Air Entering Evaporator — cfm								
		4500	6000	7500	4500	6000	7500	4500	6000	7500
80	TC	60.0	63.0	65.0	64.0	66.0	68.0	67.0	68.0	70.0
	SHC	9.0	5.0	2.0	16.0	11.0	7.0	22.0	16.0	11.0
	kW	12.8	12.8	12.9	12.9	12.9	13.0	12.9	13.0	13.0
75	TC	63.0	66.0	68.0	67.0	69.0	71.0	70.0	72.0	74.0
	SHC	12.0	8.0	4.0	19.0	14.0	9.0	25.0	19.0	13.0
	kW	12.5	12.5	12.6	12.6	12.6	12.6	12.6	12.6	12.6
70	TC	66.0	69.0	71.0	70.0	73.0	74.0	73.0	75.0	77.0
	SHC	14.0	10.0	7.0	22.0	16.0	12.0	28.0	21.0	16.0
	kW	12.4	12.4	12.5	12.5	12.5	12.5	12.5	12.5	12.5
60	TC	72.0	74.0	77.0	76.0	79.0	80.0	79.0	81.0	83.0
	SHC	21.0	15.0	11.0	26.0	21.0	17.0	33.0	26.0	21.0
	kW	12.4	12.4	12.4	12.4	12.4	12.4	12.4	12.4	12.4
50	TC	77.0	80.0	82.0	82.0	84.0	86.0	85.0	87.0	89.0
	SHC	24.0	19.0	16.0	31.0	26.0	22.0	38.0	32.0	26.0
	kW	12.4	12.4	12.4	12.4	12.4	12.4	12.4	12.4	12.4
40	TC	82.0	85.0	87.0	87.0	90.0	92.0	90.0	92.0	95.0
	SHC	28.0	24.0	20.0	36.0	31.0	27.0	43.0	37.0	31.0
	kW	12.4	12.4	12.4	12.4	12.4	12.4	12.4	12.4	12.4

LEGEND

Edb — Entering dry bulb
Ewb — Entering wet bulb
kW — compressor Power Input
SCFM/BF — Standard Cubic Feet per Minute/Bypass Factor
SHC — Sensible Heat Capacity (1000 Btuh) Gross
TC — Total Capacity (1000 Btuh) Gross

Pressure Drops For Electric Heating Units

7.5 and 8.5 Ton Units

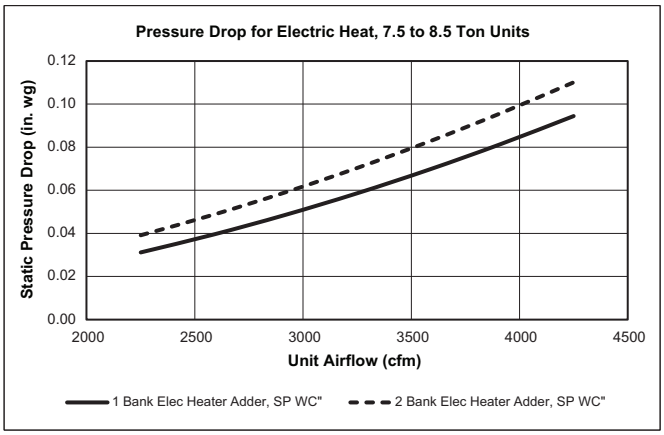

10 and 12.5 Ton Units

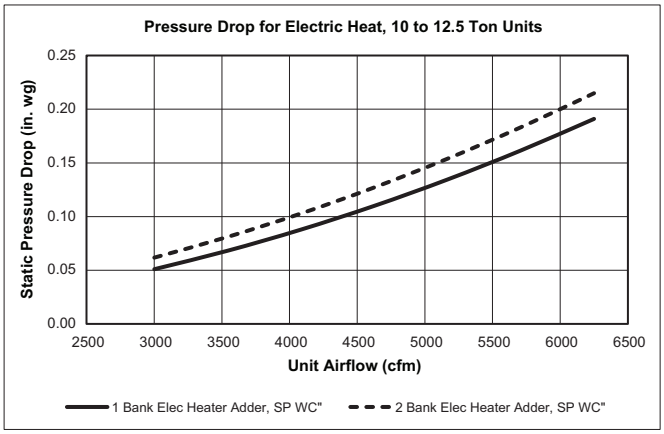

15 Ton Units

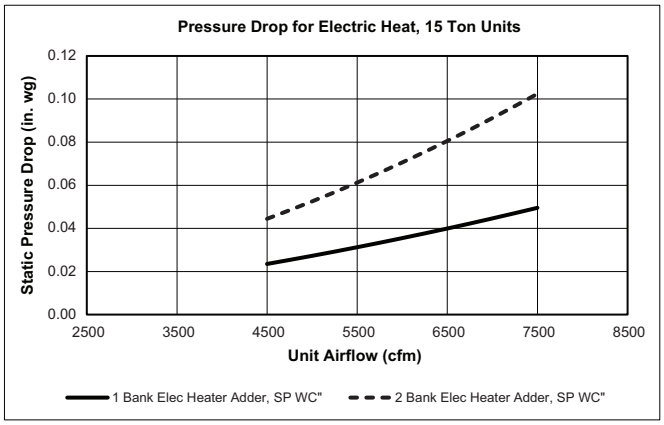

Pressure Drops For Gas Heating Units

Gas Heat Stages

48FE UNIT SIZE	HEAT SIZE		
	LOW	MEDIUM	HIGH
08	1	2	2
09	1	2	2
12	2	2	2
14	2	2	2
16	2	2	2

Gas Heat Static Pressure Deductions (in. wg) — 7.5 To 8.5 Ton Units

CFM	2250	2585	2915	3250	3585	3915	4250
MEDIUM GAS HEAT DEDUCTION	0.01	0.01	0.02	0.04	0.05	0.06	0.08
LOW GAS HEAT DEDUCTION	0.11	0.13	0.16	0.19	0.22	0.26	0.29

Gas Heat Static Pressure Deductions (in. wg) — 10 To 12.5 Ton Units

CFM	3000	3540	4085	4625	5165	5710	6250
MEDIUM GAS HEAT DEDUCTION	–0.03	0.00	0.04	0.08	0.13	0.20	0.27
LOW GAS HEAT DEDUCTION	0.17	0.24	0.31	0.40	0.49	0.59	0.71

Gas Heat Static Pressure Deductions (in. wg) — 15 Ton Units

CFM	4500	5000	5500	6000	6500	7000	7500
HIGH GAS HEAT DEDUCTION	0.21	0.24	0.26	0.29	0.31	0.34	0.36
MEDIUM GAS HEAT DEDUCTION	0.20	0.22	0.25	0.27	0.29	0.32	0.34
LOW GAS HEAT DEDUCTION	0.33	0.37	0.42	0.48	0.53	0.59	0.65

Field-installed Accessory Electric Heater Data

50FE UNIT SIZE	VOLTAGE	HEATER MODEL NUMBER	HEAT STAGES
08	208/230	CRHEATER411A00	1
		CRHEATER412A00	1
		CRHEATER414A00	2
		CRHEATER415A00	2
		CRHEATER416A00	2
	460	CRHEATER420A00	1
		CRHEATER421A00	2
		CRHEATER422A00	2
		CRHEATER423A00	2
	575	CRHEATER425A00	1
		CRHEATER427A00	2
09	208/230	CRHEATER411A00	1
		CRHEATER412A00	1
		CRHEATER414A00	2
		CRHEATER415A00	2
		CRHEATER416A00	2
	460	CRHEATER420A00	1
		CRHEATER421A00	2
		CRHEATER422A00	2
		CRHEATER423A00	2
	575	CRHEATER425A00	1
		CRHEATER427A00	2
12	208/230	CRHEATER411A00	1
		CRHEATER412A00	1
		CRHEATER415A00	2
		CRHEATER416A00	2
		CRHEATER417A00	2
	460	CRHEATER420A00	1
		CRHEATER422A00	2
		CRHEATER423A00	2
		CRHEATER424A00	2
	575	CRHEATER425A00	1
		CRHEATER427A00	2
		CRHEATER428A00	2
14	208/230	CRHEATER411A00	1
		CRHEATER412A00	1
		CRHEATER415A00	2
		CRHEATER416A00	2
		CRHEATER417A00	2
	460	CRHEATER420A00	1
		CRHEATER422A00	2
		CRHEATER423A00	2
		CRHEATER424A00	2
	575	CRHEATER425A00	2
		CRHEATER427A00	2
		CRHEATER428A00	2
16	208/230	CRHEATER412A00	1
		CRHEATER414A00	2
		CRHEATER415A00	2
		CRHEATER416A00	2
		CRHEATER417A00	2
		CRHEATER451A00	2
	460	CRHEATER420A00	1
		CRHEATER421A00	2
		CRHEATER422A00	2
		CRHEATER423A00	2
		CRHEATER424A00	2
		CRHEATER452A00	1
	575	CRHEATER425A00	1
		CRHEATER427A00	2
		CRHEATER428A00	2
		CRHEATER453A00	2

Economizer Barometric Relief and Damper Leakage — 7.5 to 12.5 Ton Units (Sizes 08-14)

Horizontal Economizer Barometric Relief

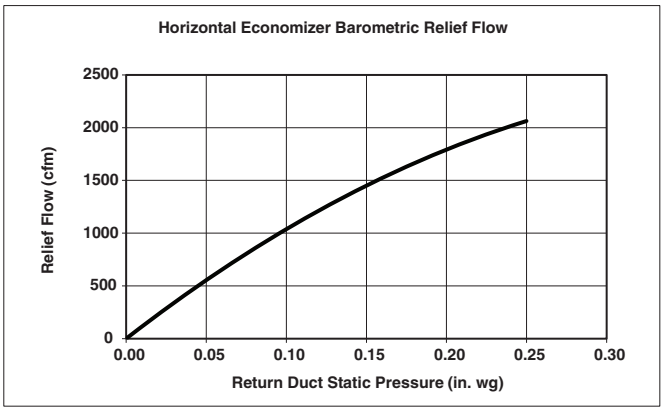

Vertical Economizer Barometric Relief

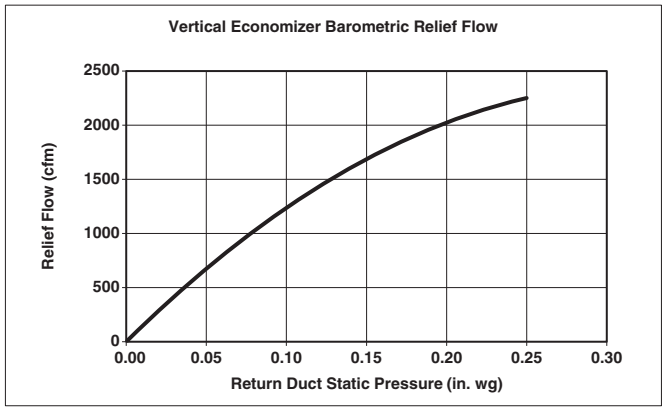

Horizontal Economizer Damper Leakage

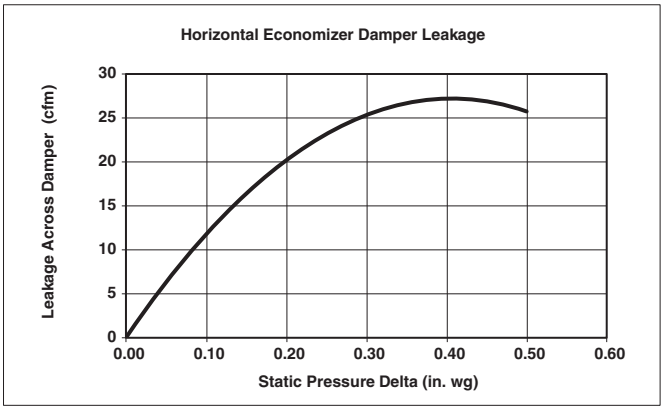

Vertical Economizer Damper Leakage

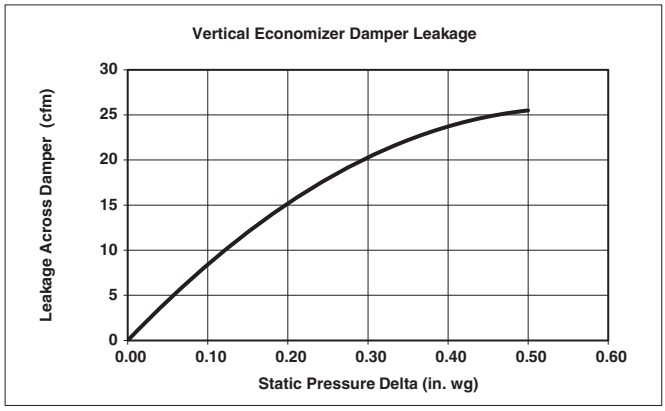

Economizer Barometric Relief and Damper Leakage — 15 Ton Units (Size 16)

Horizontal Economizer Barometric Relief

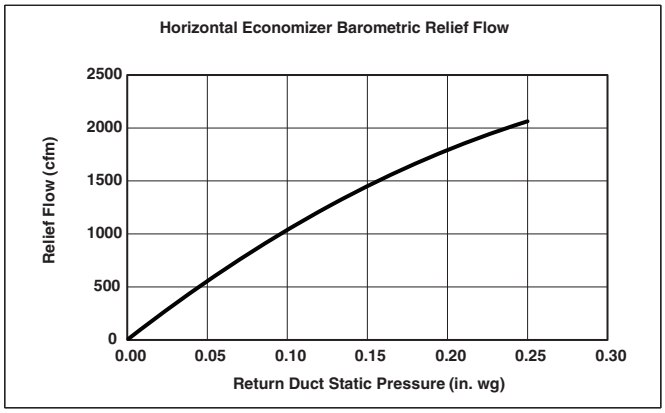

Vertical Economizer Barometric Relief

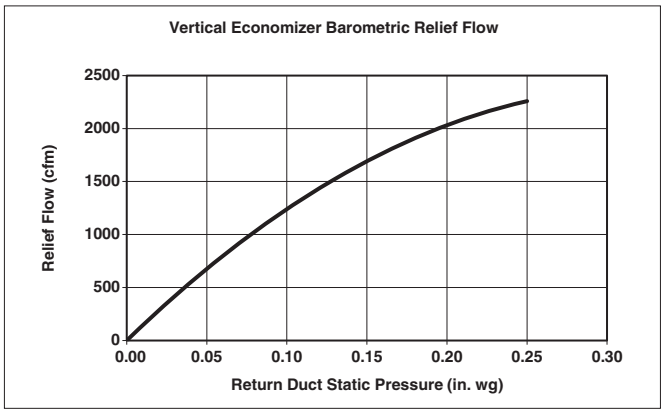

Horizontal Economizer Damper Leakage

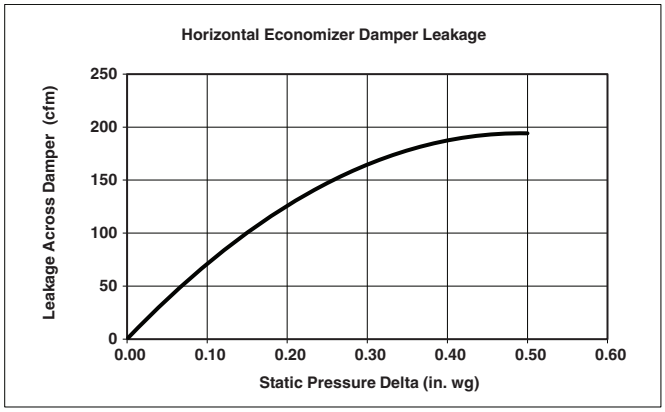

Vertical Economizer Damper Leakage

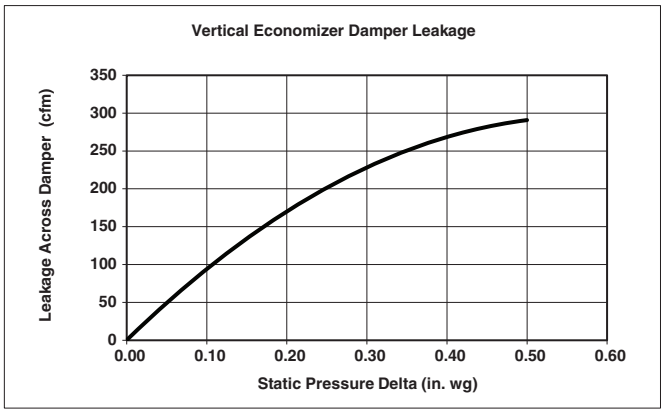

Economizer Pressure Drop 7.5 to 15 Ton Units

7.5 to 10 Ton Units (Sizes 08-14)

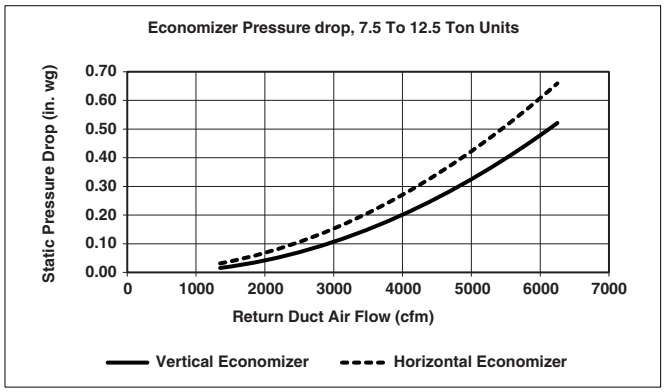

15 Ton Units (Size 16)

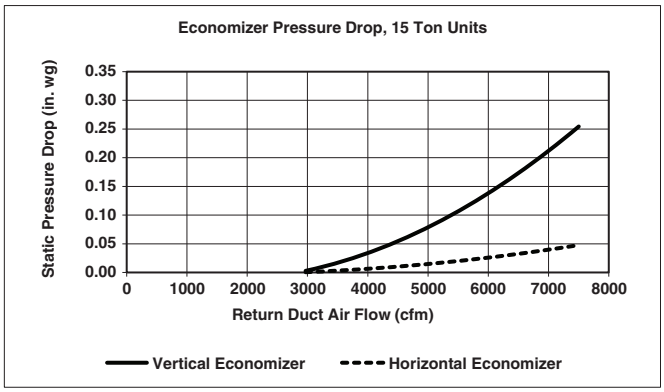

Humidi-Mizer® Coil Pressure Drops — 7.5 To 15 Ton Units

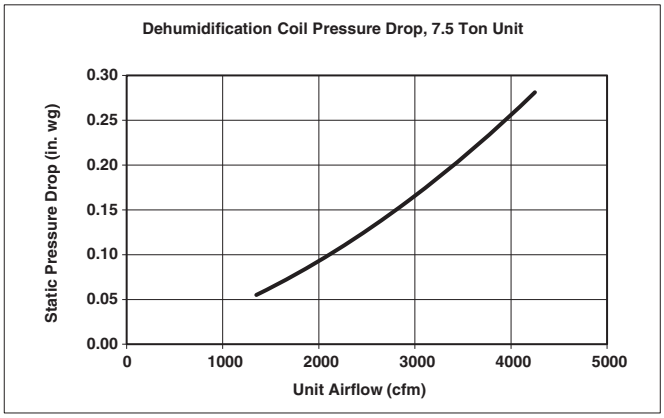

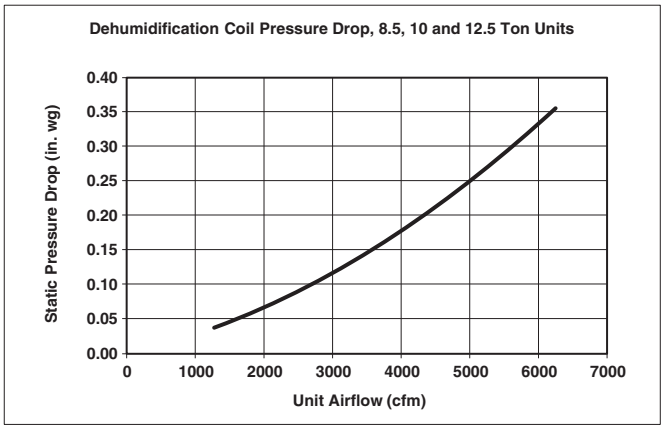

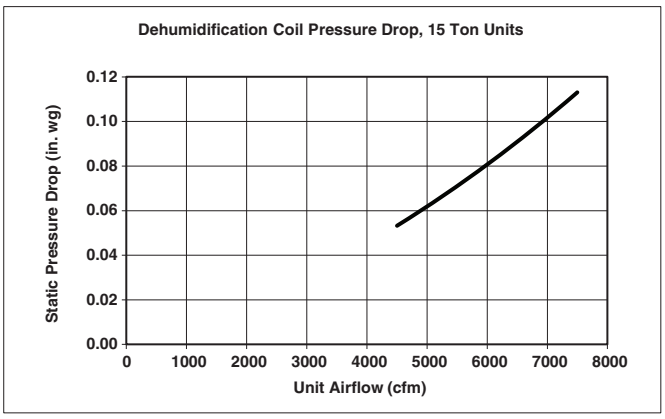

MERV-13 filters pressure drop

NOTE: For 4 in. MERV-13 filter factory option, use Packaged RTU Builder program for associated pressure drop.

General Fan Performance Notes

1. Interpolation is permissible. Do not extrapolate.
2. External static pressure is the static pressure difference between the return duct and the supply duct plus the static pressure caused by any FIOPs or accessories.
3. Tabular data accounts for pressure loss due to clean filters, unit casing, wet coils, and highest gas heat exchanger (when gas heat unit).
4. Factory options and accessories may effect static pressure losses. Gas heat unit fan tables assume highest gas heat models; for fan selections with low or medium heat models, the user must deduct low and medium heat static pressures. Selection software is available, through your salesperson, to help you select the best motor/drive combination for your application.
5. The fan performance tables offer motor/drive recommendations. In cases when 2 motor/drive combinations would work, the lower horsepower option is recommended.
6. Fan tables for 48FE units include highest gas heat. Utilize static pressure deduction tables on page 57 for lower gas heat capacities.
7. For information on the electrical properties of the fan motors, please see the Electrical information section of this book.
8. For more information on the performance limits of the fan motors, see the application data section of this book.
9. The EPACT (Energy Policy Act of 1992) regulates energy requirements for specific types of indoor fan motors. Motors regulated by EPACT include any general purpose, T-frame (3-digit, 143 and larger), single-speed, foot mounted, polyphase, squirrel cage induction motors of NEMA (National Electrical Manufacturers Association) design A and B, manufactured for use in the United States. Ranging from 1 to 200 Hp, these continuous-duty motors operate on 230 and 460 volt, 60 Hz power. If a motor does not fit into these specifications, the motor does not have to be replaced by an EPACT compliant energy-efficient motor. Variable-speed motors are exempt from EPACT compliance requirements.

48FEFM08 — 7.5 Ton Vertical Supply (rpm - bhp)

CFM	AVAILABLE EXTERNAL STATIC PRESSURE (in. wg)									
	0.2		0.4		0.6		0.8		1.0	
	rpm	bhp	rpm	bhp	rpm	bhp	rpm	bhp	rpm	bhp
2250	1045	0.43	1166	0.60	1273	0.78	1372	0.97	1463	1.18
2440	1111	0.51	1226	0.69	1329	0.88	1424	1.08	1512	1.30
2625	1178	0.61	1288	0.80	1387	1.00	1478	1.21	1564	1.43
2815	1246	0.72	1351	0.91	1446	1.12	1534	1.34	1617	1.57
3000	1314	0.83	1415	1.04	1507	1.26	1592	1.48	1672	1.71
3190	1383	0.96	1480	1.17	1568	1.40	1651	1.63	1729	1.87
3375	1453	1.09	1545	1.31	1631	1.55	1711	1.78	1786	2.03
3565	1523	1.23	1612	1.46	1694	1.70	1772	1.94	1845	2.20
3750	1594	1.38	1679	1.62	1759	1.86	1834	2.11	1905	2.36

CFM	AVAILABLE EXTERNAL STATIC PRESSURE (in. wg)									
	1.2		1.4		1.6		1.8		2.0	
	rpm	bhp	rpm	bhp	rpm	bhp	rpm	bhp	rpm	bhp
2250	1548	1.40	1629	1.63	1706	1.87	1778	2.12	1848	2.38
2440	1595	1.52	1674	1.76	1749	2.01	1821	2.27	1889	2.53
2625	1645	1.66	1721	1.90	1794	2.16	1865	2.42	1932	2.69
2815	1696	1.81	1770	2.06	1842	2.32	1910	2.58	1976	2.86
3000	1748	1.96	1821	2.22	1891	2.48	1958	2.75	2022	3.03
3190	1803	2.12	1873	2.38	1941	2.65	2007	2.93	—	—
3375	1858	2.29	1927	2.55	1994	2.83	2058	3.11	—	—
3565	1915	2.45	1982	2.72	2047	3.00	—	—	—	—
3750	1973	2.62	2039	2.90	2102	3.17	—	—	—	—

Std/Med Static 1045-2000 rpm, 2.4 maximum bhp

High Static 1045-2200 rpm, 3.0 maximum bhp

48FEFM08 — Standard/Medium Static — 7.5 Ton Vertical Supply (rpm - vdc)

CFM	AVAILABLE EXTERNAL STATIC PRESSURE (in. wg)									
	0.2		0.4		0.6		0.8		1.0	
	rpm	vdc	rpm	vdc	rpm	vdc	rpm	vdc	rpm	vdc
2250	1045	5.1	1166	5.7	1273	6.3	1372	6.8	1463	7.2
2440	1111	5.4	1226	6.0	1329	6.5	1424	7.0	1512	7.5
2625	1178	5.8	1288	6.3	1387	6.8	1478	7.3	1564	7.8
2815	1246	6.1	1351	6.7	1446	7.2	1534	7.6	1617	8.0
3000	1314	6.5	1415	7.0	1507	7.5	1592	7.9	1672	8.3
3190	1383	6.8	1480	7.3	1568	7.8	1651	8.2	1729	8.6
3375	1453	7.2	1545	7.7	1631	8.1	1711	8.5	1786	8.9
3565	1523	7.5	1612	8.0	1694	8.4	1772	8.8	1845	9.2
3750	1594	7.9	1679	8.3	1759	8.8	1834	9.1	1905	9.5

CFM	AVAILABLE EXTERNAL STATIC PRESSURE (in. wg)									
	1.2		1.4		1.6		1.8		2.0	
	rpm	vdc	rpm	vdc	rpm	vdc	rpm	vdc	rpm	vdc
2250	1548	7.7	1629	8.1	1706	8.5	1778	8.9	1848	9.2
2440	1595	7.9	1674	8.3	1749	8.7	1821	9.1	—	—
2625	1645	8.2	1721	8.6	1794	8.9	—	—	—	—
2815	1696	8.4	1770	8.8	1842	9.2	—	—	—	—
3000	1748	8.7	1821	9.1	—	—	—	—	—	—
3190	1803	9.0	1873	9.3	—	—	—	—	—	—
3375	1858	9.3	—	—	—	—	—	—	—	—
3565	—	—	—	—	—	—	—	—	—	—
3750	—	—	—	—	—	—	—	—	—	—

Std/Med Static 1045-2000 rpm

Fan data (cont)

48FEFM08 — High Static — 7.5 Ton Vertical Supply (rpm - vdc)

CFM	AVAILABLE EXTERNAL STATIC PRESSURE (in. wg)									
	0.2		0.4		0.6		0.8		1.0	
	rpm	vdc	rpm	vdc	rpm	vdc	rpm	vdc	rpm	vdc
2250	1045	4.7	1166	5.2	1273	5.7	1372	6.2	1463	6.6
2440	1111	5.0	1226	5.5	1329	6.0	1424	6.4	1512	6.8
2625	1178	5.3	1288	5.8	1387	6.2	1478	6.7	1564	7.1
2815	1246	5.6	1351	6.1	1446	6.5	1534	6.9	1617	7.3
3000	1314	5.9	1415	6.4	1507	6.8	1592	7.2	1672	7.6
3190	1383	6.2	1480	6.7	1568	7.1	1651	7.5	1729	7.8
3375	1453	6.6	1545	7.0	1631	7.4	1711	7.7	1786	8.1
3565	1523	6.9	1612	7.3	1694	7.7	1772	8.0	1845	8.4
3750	1594	7.2	1679	7.6	1759	8.0	1834	8.3	1905	8.6

CFM	AVAILABLE EXTERNAL STATIC PRESSURE (in. wg)									
	1.2		1.4		1.6		1.8		2.0	
	rpm	vdc	rpm	vdc	rpm	vdc	rpm	vdc	rpm	vdc
2250	1548	7.0	1629	7.4	1706	7.7	1778	8.1	1848	8.4
2440	1595	7.2	1674	7.6	1749	7.9	1821	8.3	1889	8.6
2625	1645	7.4	1721	7.8	1794	8.1	1865	8.5	1932	8.8
2815	1696	7.7	1770	8.0	1842	8.3	1910	8.7	1976	9.0
3000	1748	7.9	1821	8.3	1891	8.6	1958	8.9	2022	9.2
3190	1803	8.2	1873	8.5	1941	8.8	2007	9.1	—	—
3375	1858	8.4	1927	8.7	1994	9.0	2058	9.3	—	—
3565	1915	8.7	1982	9.0	2047	9.3	—	—	—	—
3750	1973	9.0	2039	9.3	2102	9.5	—	—	—	—

High Static 1045-2200 rpm

48FEFM09 — 8.5 Ton Vertical Supply (rpm - bhp)

CFM	AVAILABLE EXTERNAL STATIC PRESSURE (in. wg)									
	0.2		0.4		0.6		0.8		1.0	
	rpm	bhp	rpm	bhp	rpm	bhp	rpm	bhp	rpm	bhp
2550	1091	0.48	1198	0.63	1298	0.81	1391	0.99	1478	1.19
2765	1164	0.58	1264	0.74	1359	0.92	1448	1.11	1532	1.31
2975	1238	0.69	1332	0.85	1422	1.04	1507	1.24	1588	1.45
3190	1312	0.81	1402	0.98	1487	1.17	1569	1.38	1646	1.59
3400	1388	0.94	1473	1.12	1554	1.32	1632	1.53	1706	1.75
3615	1464	1.08	1544	1.27	1622	1.47	1696	1.69	1768	1.91
3825	1541	1.24	1617	1.43	1691	1.64	1762	1.85	1831	2.08
4040	1618	1.40	1691	1.59	1761	1.80	1830	2.02	1896	2.25
4250	1696	1.56	1765	1.76	1832	1.97	1898	2.19	1962	2.42

CFM	AVAILABLE EXTERNAL STATIC PRESSURE (in. wg)									
	1.2		1.4		1.6		1.8		2.0	
	rpm	bhp	rpm	bhp	rpm	bhp	rpm	bhp	rpm	bhp
2550	1559	1.40	1636	1.61	1709	1.84	1779	2.08	1846	2.32
2765	1611	1.53	1686	1.75	1758	1.98	1826	2.22	1892	2.47
2975	1665	1.67	1738	1.90	1808	2.14	1875	2.38	1939	2.63
3190	1721	1.82	1792	2.05	1860	2.30	1925	2.55	1988	2.80
3400	1778	1.98	1847	2.22	1913	2.46	1977	2.72	2039	2.98
3615	1837	2.14	1904	2.38	1969	2.64	2031	2.89	2091	3.16
3825	1898	2.31	1963	2.56	2026	2.81	2086	3.07	—	—
4040	1961	2.49	2023	2.73	2084	2.98	—	—	—	—
4250	2024	2.66	2085	2.90	2144	3.16	—	—	—	—

Std/Med Static 1091-2000 rpm, 2.4 maximum bhp

High Static 1091-2200 rpm, 3.0 maximum bhp

48FEFM09 — Standard/Medium Static — 8.5 Ton Vertical Supply (rpm - vdc)

CFM	AVAILABLE EXTERNAL STATIC PRESSURE (in. wg)									
	0.2		0.4		0.6		0.8		1.0	
	rpm	vdc	rpm	vdc	rpm	vdc	rpm	vdc	rpm	vdc
2550	1091	5.3	1198	5.9	1298	6.4	1391	6.9	1478	7.3
2765	1164	5.7	1264	6.2	1359	6.7	1448	7.2	1532	7.6
2975	1238	6.1	1332	6.6	1422	7.0	1507	7.5	1588	7.9
3190	1312	6.5	1402	6.9	1487	7.4	1569	7.8	1646	8.2
3400	1388	6.9	1473	7.3	1554	7.7	1632	8.1	1706	8.5
3615	1464	7.2	1544	7.7	1622	8.1	1696	8.4	1768	8.8
3825	1541	7.6	1617	8.0	1691	8.4	1762	8.8	1831	9.1
4040	1618	8.0	1691	8.4	1761	8.8	1830	9.1	1896	9.5
4250	1696	8.4	1765	8.8	1832	9.1	1898	9.5	1962	9.8

CFM	AVAILABLE EXTERNAL STATIC PRESSURE (in. wg)									
	1.2		1.4		1.6		1.8		2.0	
	rpm	vdc	rpm	vdc	rpm	vdc	rpm	vdc	rpm	vdc
2550	1559	7.7	1636	8.1	1709	8.5	1779	8.9	1846	9.2
2765	1611	8.0	1686	8.4	1758	8.8	1826	9.1	—	—
2975	1665	8.3	1738	8.7	1808	9.0	1875	9.4	—	—
3190	1721	8.6	1792	8.9	1860	9.3	—	—	—	—
3400	1778	8.9	1847	9.2	—	—	—	—	—	—
3615	1837	9.2	1904	9.5	—	—	—	—	—	—
3825	1898	9.5	—	—	—	—	—	—	—	—
4040	—	—	—	—	—	—	—	—	—	—
4250	—	—	—	—	—	—	—	—	—	—

Std/Med Static 1091-2000 rpm

Fan data (cont)

48FEFM09 — High Static — 8.5 Ton Vertical Supply (rpm - vdc)

CFM	AVAILABLE EXTERNAL STATIC PRESSURE (in. wg)									
	0.2		0.4		0.6		0.8		1.0	
	rpm	vdc	rpm	vdc	rpm	vdc	rpm	vdc	rpm	vdc
2550	1091	4.9	1198	5.4	1298	5.8	1391	6.3	1478	6.7
2765	1164	5.2	1264	5.7	1359	6.1	1448	6.5	1532	6.9
2975	1238	5.6	1332	6.0	1422	6.4	1507	6.8	1588	7.2
3190	1312	5.9	1402	6.3	1487	6.7	1569	7.1	1646	7.4
3400	1388	6.3	1473	6.6	1554	7.0	1632	7.4	1706	7.7
3615	1464	6.6	1544	7.0	1622	7.3	1696	7.7	1768	8.0
3825	1541	7.0	1617	7.3	1691	7.7	1762	8.0	1831	8.3
4040	1618	7.3	1691	7.7	1761	8.0	1830	8.3	1896	8.6
4250	1696	7.7	1765	8.0	1832	8.3	1898	8.6	1962	8.9

CFM	AVAILABLE EXTERNAL STATIC PRESSURE (in. wg)									
	1.2		1.4		1.6		1.8		2.0	
	rpm	vdc	rpm	vdc	rpm	vdc	rpm	vdc	rpm	vdc
2550	1559	7.0	1636	7.4	1709	7.7	1779	8.1	1846	8.4
2765	1611	7.3	1686	7.6	1758	8.0	1826	8.3	1892	8.6
2975	1665	7.5	1738	7.9	1808	8.2	1875	8.5	1939	8.8
3190	1721	7.8	1792	8.1	1860	8.4	1925	8.7	1988	9.0
3400	1778	8.1	1847	8.4	1913	8.7	1977	9.0	2039	9.3
3615	1837	8.3	1904	8.6	1969	8.9	2031	9.2	2091	9.5
3825	1898	8.6	1963	8.9	2026	9.2	2086	9.5	—	—
4040	1961	8.9	2023	9.2	2084	9.5	—	—	—	—
4250	2024	9.2	2085	9.5	2144	9.7	—	—	—	—

High Static 1091-2200 rpm

48FEFM12 — 10 Ton Vertical Supply (rpm - bhp)

CFM	AVAILABLE EXTERNAL STATIC PRESSURE (in. wg)									
	0.2		0.4		0.6		0.8		1.0	
	rpm	bhp	rpm	bhp	rpm	bhp	rpm	bhp	rpm	bhp
3000	1266	0.74	1360	0.92	1449	1.12	1534	1.32	1613	1.54
3250	1357	0.91	1444	1.09	1528	1.29	1608	1.51	1684	1.73
3500	1448	1.09	1530	1.28	1609	1.49	1685	1.72	1758	1.95
3750	1539	1.29	1617	1.49	1691	1.71	1764	1.94	1833	2.18
4000	1632	1.51	1705	1.72	1775	1.94	1844	2.18	1911	2.42
4250	1725	1.74	1794	1.96	1861	2.19	1926	2.43	1990	2.68
4500	1818	1.99	1884	2.22	1948	2.45	2010	2.69	2071	2.94
4750	1912	2.25	1974	2.47	2035	2.71	2095	2.96	2153	3.21
5000	2006	2.51	2066	2.74	2124	2.98	2181	3.23	—	—

CFM	AVAILABLE EXTERNAL STATIC PRESSURE (in. wg)									
	1.2		1.4		1.6		1.8		2.0	
	rpm	bhp	rpm	bhp	rpm	bhp	rpm	bhp	rpm	bhp
3000	1689	1.77	1762	2.01	1831	2.25	1897	2.50	1961	2.77
3250	1757	1.97	1827	2.21	1894	2.47	1959	2.73	2021	3.00
3500	1828	2.19	1895	2.44	1960	2.70	2023	2.97	2084	3.25
3750	1900	2.42	1965	2.68	2028	2.95	2089	3.22	2148	3.50
4000	1975	2.67	2038	2.94	2099	3.21	2158	3.49	—	—
4250	2052	2.94	2112	3.20	2171	3.48	—	—	—	—
4500	2130	3.20	2188	3.47	—	—	—	—	—	—
4750	—	—	—	—	—	—	—	—	—	—
5000	—	—	—	—	—	—	—	—	—	—

Std/Med Static 1266-2000 rpm, 2.4 maximum bhp

High Static 1266-2200 rpm, 5.0 maximum bhp

48FEFM12 — Standard/Medium Static — 10 Ton Vertical Supply (rpm - vdc)

CFM	AVAILABLE EXTERNAL STATIC PRESSURE (in. wg)									
	0.2		0.4		0.6		0.8		1.0	
	rpm	vdc	rpm	vdc	rpm	vdc	rpm	vdc	rpm	vdc
3000	1266	6.2	1360	6.7	1449	7.2	1534	7.6	1613	8.0
3250	1357	6.7	1444	7.1	1528	7.6	1608	8.0	1684	8.4
3500	1448	7.2	1530	7.6	1609	8.0	1685	8.4	1758	8.8
3750	1539	7.6	1617	8.0	1691	8.4	1764	8.8	1833	9.1
4000	1632	8.1	1705	8.5	1775	8.8	1844	9.2	—	—
4250	1725	8.6	1794	8.9	1861	9.3	—	—	—	—
4500	1818	9.1	1884	9.4	—	—	—	—	—	—
4750	1912	9.5	—	—	—	—	—	—	—	—
5000	—	—	—	—	—	—	—	—	—	—

CFM	AVAILABLE EXTERNAL STATIC PRESSURE (in. wg)									
	1.2		1.4		1.6		1.8		2.0	
	rpm	vdc	rpm	vdc	rpm	vdc	rpm	vdc	rpm	vdc
3000	1689	8.4	1762	8.8	1831	9.1	—	—	—	—
3250	1757	8.8	1827	9.1	—	—	—	—	—	—
3500	1828	9.1	—	—	—	—	—	—	—	—
3750	—	—	—	—	—	—	—	—	—	—
4000	—	—	—	—	—	—	—	—	—	—
4250	—	—	—	—	—	—	—	—	—	—
4500	—	—	—	—	—	—	—	—	—	—
4750	—	—	—	—	—	—	—	—	—	—
5000	—	—	—	—	—	—	—	—	—	—

Std/Med Static 1266-2000 rpm

Fan data (cont)

48FEFM12 — High Static — 10 Ton Vertical Supply (rpm - vdc)

CFM	AVAILABLE EXTERNAL STATIC PRESSURE (in. wg)									
	0.2		0.4		0.6		0.8		1.0	
	rpm	vdc	rpm	vdc	rpm	vdc	rpm	vdc	rpm	vdc
3000	1266	5.7	1360	6.1	1449	6.5	1534	6.9	1613	7.3
3250	1357	6.1	1444	6.5	1528	6.9	1608	7.3	1684	7.6
3500	1448	6.5	1530	6.9	1609	7.3	1685	7.6	1758	8.0
3750	1539	6.9	1617	7.3	1691	7.7	1764	8.0	1833	8.3
4000	1632	7.4	1705	7.7	1775	8.0	1844	8.4	1911	8.7
4250	1725	7.8	1794	8.1	1861	8.4	1926	8.7	1990	9.0
4500	1818	8.2	1884	8.5	1948	8.8	2010	9.1	2071	9.4
4750	1912	8.7	1974	9.0	2035	9.2	2095	9.5	2153	9.8
5000	2006	9.1	2066	9.4	2124	9.6	2181	9.9	—	—

CFM	AVAILABLE EXTERNAL STATIC PRESSURE (in. wg)									
	1.2		1.4		1.6		1.8		2.0	
	rpm	vdc	rpm	vdc	rpm	vdc	rpm	vdc	rpm	vdc
3000	1689	7.6	1762	8.0	1831	8.3	1897	8.6	1961	8.9
3250	1757	8.0	1827	8.3	1894	8.6	1959	8.9	2021	9.2
3500	1828	8.3	1895	8.6	1960	8.9	2023	9.2	2084	9.5
3750	1900	8.6	1965	8.9	2028	9.2	2089	9.5	2148	9.8
4000	1975	9.0	2038	9.3	2099	9.5	2158	9.8	—	—
4250	2052	9.3	2112	9.6	2171	9.9	—	—	—	—
4500	2130	9.7	2188	9.9	—	—	—	—	—	—
4750	—	—	—	—	—	—	—	—	—	—
5000	—	—	—	—	—	—	—	—	—	—

High Static 1266-2200 rpm

48FEFM14 — 12.5 Ton Vertical Supply (rpm - bhp)

CFM	AVAILABLE EXTERNAL STATIC PRESSURE (in. wg)									
	0.2		0.4		0.6		0.8		1.0	
	rpm	bhp	rpm	bhp	rpm	bhp	rpm	bhp	rpm	bhp
3750	1320	1.21	1416	1.49	1503	1.79	1583	2.09	1657	2.39
4065	1414	1.48	1504	1.78	1587	2.09	1664	2.41	1736	2.74
4375	1509	1.79	1594	2.11	1673	2.44	1747	2.78	1817	3.13
4690	1604	2.14	1685	2.49	1761	2.84	1832	3.19	1899	3.56
5000	1700	2.54	1777	2.90	1849	3.26	1918	3.64	1983	4.03
5315	1797	2.97	1870	3.35	1939	3.73	2005	4.13	2068	4.53
5625	1894	3.44	1964	3.84	2030	4.24	2093	4.65	2154	5.06
5940	1992	3.95	2058	4.36	2121	4.77	—	—	—	—
6250	2090	4.50	2153	4.92	—	—	—	—	—	—

CFM	AVAILABLE EXTERNAL STATIC PRESSURE (in. wg)									
	1.2		1.4		1.6		1.8		2.0	
	rpm	bhp	rpm	bhp	rpm	bhp	rpm	bhp	rpm	bhp
3750	1727	2.71	1794	3.04	1857	3.37	1918	3.71	1976	4.06
4065	1804	3.08	1869	3.42	1930	3.77	1989	4.12	2046	4.49
4375	1883	3.48	1946	3.85	2005	4.21	2063	4.58	2119	4.97
4690	1963	3.93	2024	4.31	2082	4.69	2139	5.08	—	—
5000	2045	4.42	2104	4.81	—	—	—	—	—	—
5315	2128	4.93	—	—	—	—	—	—	—	—
5625	—	—	—	—	—	—	—	—	—	—
5940	—	—	—	—	—	—	—	—	—	—
6250	—	—	—	—	—	—	—	—	—	—

Std/Med Static 1320-2200 rpm, 3.0 maximum bhp

High Static 1320-2200 rpm, 5.0 maximum bhp

48FEFM14 — Standard/Medium Static — 12.5 Ton Vertical Supply (rpm - vdc)

CFM	AVAILABLE EXTERNAL STATIC PRESSURE (in. wg)									
	0.2		0.4		0.6		0.8		1.0	
	rpm	vdc	rpm	vdc	rpm	vdc	rpm	vdc	rpm	vdc
3750	1320	5.9	1416	6.4	1503	6.8	1583	7.2	1657	7.5
4065	1414	6.4	1504	6.8	1587	7.2	1664	7.5	1736	7.9
4375	1509	6.8	1594	7.2	1673	7.6	1747	7.9	—	—
4690	1604	7.2	1685	7.6	1761	8.0	—	—	—	—
5000	1700	7.7	1777	8.0	—	—	—	—	—	—
5315	1797	8.1	—	—	—	—	—	—	—	—
5625	—	—	—	—	—	—	—	—	—	—
5940	—	—	—	—	—	—	—	—	—	—
6250	—	—	—	—	—	—	—	—	—	—

CFM	AVAILABLE EXTERNAL STATIC PRESSURE (in. wg)									
	1.2		1.4		1.6		1.8		2.0	
	rpm	vdc	rpm	vdc	rpm	vdc	rpm	vdc	rpm	vdc
3750	1727	7.8	—	—	—	—	—	—	—	—
4065	—	—	—	—	—	—	—	—	—	—
4375	—	—	—	—	—	—	—	—	—	—
4690	—	—	—	—	—	—	—	—	—	—
5000	—	—	—	—	—	—	—	—	—	—
5315	—	—	—	—	—	—	—	—	—	—
5625	—	—	—	—	—	—	—	—	—	—
5940	—	—	—	—	—	—	—	—	—	—
6250	—	—	—	—	—	—	—	—	—	—

Std/Med Static 1320-2200 rpm

48FEFM14 — High Static — 12.5 Ton Vertical Supply (rpm - vdc)

CFM	AVAILABLE EXTERNAL STATIC PRESSURE (in. wg)									
	0.2		0.4		0.6		0.8		1.0	
	rpm	vdc	rpm	vdc	rpm	vdc	rpm	vdc	rpm	vdc
3750	1320	5.9	1416	6.4	1503	6.8	1583	7.2	1657	7.5
4065	1414	6.4	1504	6.8	1587	7.2	1664	7.5	1736	7.9
4375	1509	6.8	1594	7.2	1673	7.6	1747	7.9	1817	8.2
4690	1604	7.2	1685	7.6	1761	8.0	1832	8.3	1899	8.6
5000	1700	7.7	1777	8.0	1849	8.4	1918	8.7	1983	9.0
5315	1797	8.1	1870	8.5	1939	8.8	2005	9.1	2068	9.4
5625	1894	8.6	1964	8.9	2030	9.2	2093	9.5	2154	9.8
5940	1992	9.0	2058	9.3	2121	9.6	—	—	—	—
6250	2090	9.5	2153	9.8	—	—	—	—	—	—

CFM	AVAILABLE EXTERNAL STATIC PRESSURE (in. wg)									
	1.2		1.4		1.6		1.8		2.0	
	rpm	vdc	rpm	vdc	rpm	vdc	rpm	vdc	rpm	vdc
3750	1727	7.8	1794	8.1	1857	8.4	1918	8.7	1976	9.0
4065	1804	8.2	1869	8.5	1930	8.8	1989	9.0	2046	9.3
4375	1883	8.5	1946	8.8	2005	9.1	2063	9.4	2119	9.6
4690	1963	8.9	2024	9.2	2082	9.5	2139	9.7	—	—
5000	2045	9.3	2104	9.6	—	—	—	—	—	—
5315	2128	9.7	—	—	—	—	—	—	—	—
5625	—	—	—	—	—	—	—	—	—	—
5940	—	—	—	—	—	—	—	—	—	—
6250	—	—	—	—	—	—	—	—	—	—

High Static 1320-2200 rpm

Fan data (cont)

48FEFM16 — 15 Ton Vertical Supply (rpm - bhp)

CFM	AVAILABLE EXTERNAL STATIC PRESSURE (in. wg)									
	0.2		0.4		0.6		0.8		1.0	
	rpm	bhp	rpm	bhp	rpm	bhp	rpm	bhp	rpm	bhp
4500	1251	1.02	1332	1.23	1412	1.47	1491	1.73	1569	2.02
4875	1343	1.26	1417	1.48	1491	1.72	1565	1.99	1637	2.28
5250	1435	1.52	1504	1.75	1573	2.00	1641	2.28	1709	2.57
5625	1528	1.81	1592	2.05	1657	2.31	1721	2.59	1785	2.89
6000	1621	2.13	1682	2.38	1742	2.64	1802	2.92	1862	3.23
6375	1715	2.47	1772	2.73	1829	3.00	1886	3.29	1942	3.59
6750	1810	2.86	1863	3.11	1917	3.39	1971	3.69	2024	3.99
7125	1905	3.29	1955	3.56	2006	3.84	2057	4.15	2108	4.46
7500	2000	3.82	2048	4.10	2096	4.40	2144	4.71	2193	5.04

CFM	AVAILABLE EXTERNAL STATIC PRESSURE (in. wg)									
	1.2		1.4		1.6		1.8		2.0	
	rpm	bhp	rpm	bhp	rpm	bhp	rpm	bhp	rpm	bhp
4500	1645	2.33	1719	2.65	1792	3.01	1862	3.37	1930	3.76
4875	1709	2.59	1779	2.93	1848	3.28	1915	3.65	1981	4.04
5250	1777	2.89	1843	3.22	1908	3.58	1973	3.95	2036	4.35
5625	1848	3.21	1911	3.55	1973	3.90	2034	4.28	2094	4.67
6000	1922	3.55	1981	3.88	2040	4.24	2098	4.61	2156	5.01
6375	1999	3.92	2055	4.26	2111	4.61	2166	4.98		
6750	2078	4.32	2131	4.66	2184	5.02				
7125	2158	4.79								
7500										

Std/Med Static 1251-2200 rpm, 3.0 maximum bhp

High Static 1251-2200 rpm, 5.0 maximum bhp

48FEFM16 — Standard/Medium Static — 15 Ton Vertical Supply (rpm - vdc)

CFM	AVAILABLE EXTERNAL STATIC PRESSURE (in. wg)									
	0.2		0.4		0.6		0.8		1.0	
	rpm	vdc	rpm	vdc	rpm	vdc	rpm	vdc	rpm	vdc
4500	1251	5.6	1332	6.0	1412	6.4	1491	6.7	1569	7.1
4875	1343	6.0	1417	6.4	1491	6.7	1565	7.1	1637	7.4
5250	1435	6.5	1504	6.8	1573	7.1	1641	7.4	1709	7.7
5625	1528	6.9	1592	7.2	1657	7.5	1721	7.8	1785	8.1
6000	1621	7.3	1682	7.6	1742	7.9	1802	8.2	—	—
6375	1715	7.8	1772	8.0	—	—	—	—	—	—
6750	1810	8.2	—	—	—	—	—	—	—	—
7125	—	—	—	—	—	—	—	—	—	—
7500	—	—	—	—	—	—	—	—	—	—

CFM	AVAILABLE EXTERNAL STATIC PRESSURE (in. wg)									
	1.2		1.4		1.6		1.8		2.0	
	rpm	vdc	rpm	vdc	rpm	vdc	rpm	vdc	rpm	vdc
4500	1645	7.4	1719	7.8	—	—	—	—	—	—
4875	1709	7.7	1779	8.1	—	—	—	—	—	—
5250	1777	8.0	—	—	—	—	—	—	—	—
5625	—	—	—	—	—	—	—	—	—	—
6000	—	—	—	—	—	—	—	—	—	—
6375	—	—	—	—	—	—	—	—	—	—
6750	—	—	—	—	—	—	—	—	—	—
7125	—	—	—	—	—	—	—	—	—	—
7500	—	—	—	—	—	—	—	—	—	—

Std/Med Static 1251-2200 rpm

Fan data (cont)

48FEFM16 — High Static — 15 Ton Vertical Supply (rpm - vdc)

CFM	AVAILABLE EXTERNAL STATIC PRESSURE (in. wg)									
	0.2		0.4		0.6		0.8		1.0	
	rpm	vdc	rpm	vdc	rpm	vdc	rpm	vdc	rpm	vdc
4500	1251	5.6	1332	6.0	1412	6.4	1491	6.7	1569	7.1
4875	1343	6.0	1417	6.4	1491	6.7	1565	7.1	1637	7.4
5250	1435	6.5	1504	6.8	1573	7.1	1641	7.4	1709	7.7
5625	1528	6.9	1592	7.2	1657	7.5	1721	7.8	1785	8.1
6000	1621	7.3	1682	7.6	1742	7.9	1802	8.2	1862	8.4
6375	1715	7.8	1772	8.0	1829	8.3	1886	8.6	1942	8.8
6750	1810	8.2	1863	8.4	1917	8.7	1971	8.9	2024	9.2
7125	1905	8.6	1955	8.9	2006	9.1	2057	9.3	2108	9.6
7500	2000	9.1	2048	9.3	2096	9.5	2144	9.7	2193	10.0

CFM	AVAILABLE EXTERNAL STATIC PRESSURE (in. wg)									
	1.2		1.4		1.6		1.8		2.0	
	rpm	vdc	rpm	vdc	rpm	vdc	rpm	vdc	rpm	vdc
4500	1645	7.4	1719	7.8	1792	8.1	1862	8.4	1930	8.8
4875	1709	7.7	1779	8.1	1848	8.4	1915	8.7	1981	9.0
5250	1777	8.0	1843	8.4	1908	8.7	1973	9.0	2036	9.2
5625	1848	8.4	1911	8.7	1973	9.0	2034	9.2	2094	9.5
6000	1922	8.7	1981	9.0	2040	9.3	2098	9.5	2156	9.8
6375	1999	9.1	2055	9.3	2111	9.6	2166	9.8	—	—
6750	2078	9.4	2131	9.7	2184	9.9	—	—	—	—
7125	2158	9.8	—	—	—	—	—	—	—	—
7500	—	—	—	—	—	—	—	—	—	—

High Static 1251-2200 rpm

48FEFM08 — 7.5 Ton Horizontal Supply (rpm - bhp)

CFM	AVAILABLE EXTERNAL STATIC PRESSURE (in. wg)									
	0.2		0.4		0.6		0.8		1.0	
	rpm	bhp	rpm	bhp	rpm	bhp	rpm	bhp	rpm	bhp
2250	987	0.36	1114	0.52	1227	0.70	1331	0.89	1428	1.10
2440	1047	0.43	1168	0.60	1277	0.78	1377	0.98	1471	1.20
2625	1109	0.51	1223	0.68	1328	0.87	1424	1.08	1515	1.30
2815	1171	0.60	1280	0.78	1380	0.97	1474	1.19	1561	1.41
3000	1234	0.69	1338	0.88	1434	1.08	1524	1.30	1609	1.53
3190	1298	0.79	1397	0.99	1490	1.20	1577	1.42	1659	1.65
3375	1363	0.90	1458	1.10	1546	1.32	1630	1.54	1710	1.78
3565	1428	1.02	1519	1.22	1604	1.44	1685	1.67	1762	1.91
3750	1494	1.14	1580	1.35	1663	1.57	1741	1.80	1816	2.05

CFM	AVAILABLE EXTERNAL STATIC PRESSURE (in. wg)									
	1.2		1.4		1.6		1.8		2.0	
	rpm	bhp	rpm	bhp	rpm	bhp	rpm	bhp	rpm	bhp
2250	1518	1.32	1602	1.55	1682	1.79	1757	2.04	1830	2.31
2440	1558	1.42	1641	1.66	1719	1.91	1794	2.17	1865	2.44
2625	1600	1.53	1681	1.77	1758	2.03	1831	2.29	1902	2.57
2815	1644	1.65	1723	1.90	1798	2.15	1871	2.43	1940	2.71
3000	1690	1.77	1767	2.02	1841	2.29	1911	2.56	1979	2.84
3190	1737	1.90	1813	2.16	1884	2.42	1954	2.70	2020	2.98
3375	1786	2.03	1859	2.29	1930	2.56	1997	2.84	2063	3.13
3565	1836	2.16	1908	2.43	1976	2.70	2042	2.98	—	—
3750	1888	2.30	1957	2.56	2024	2.83	2089	3.11	—	—

Std/Med Static 987-2000 rpm, 2.4 maximum bhp

High Static 987-2200 rpm, 3.0 maximum bhp

48FEFM08 — Standard/Medium Static — 7.5 Ton Horizontal Supply (rpm - vdc)

CFM	AVAILABLE EXTERNAL STATIC PRESSURE (in. wg)									
	0.2		0.4		0.6		0.8		1.0	
	rpm	vdc	rpm	vdc	rpm	vdc	rpm	vdc	rpm	vdc
2250	987	4.8	1114	5.4	1227	6.0	1331	6.6	1428	7.1
2440	1047	5.1	1168	5.7	1277	6.3	1377	6.8	1471	7.3
2625	1109	5.4	1223	6.0	1328	6.5	1424	7.0	1515	7.5
2815	1171	5.7	1280	6.3	1380	6.8	1474	7.3	1561	7.7
3000	1234	6.1	1338	6.6	1434	7.1	1524	7.6	1609	8.0
3190	1298	6.4	1397	6.9	1490	7.4	1577	7.8	1659	8.2
3375	1363	6.7	1458	7.2	1546	7.7	1630	8.1	1710	8.5
3565	1428	7.1	1519	7.5	1604	8.0	1685	8.4	1762	8.8
3750	1494	7.4	1580	7.8	1663	8.3	1741	8.7	1816	9.1

CFM	AVAILABLE EXTERNAL STATIC PRESSURE (in. wg)									
	1.2		1.4		1.6		1.8		2.0	
	rpm	vdc	rpm	vdc	rpm	vdc	rpm	vdc	rpm	vdc
2250	1518	7.5	1602	8.0	1682	8.4	1757	8.8	1830	9.1
2440	1558	7.7	1641	8.2	1719	8.6	1794	8.9	—	—
2625	1600	7.9	1681	8.4	1758	8.8	1831	9.1	—	—
2815	1644	8.2	1723	8.6	1798	9.0	—	—	—	—
3000	1690	8.4	1767	8.8	1841	9.2	—	—	—	—
3190	1737	8.6	1813	9.0	—	—	—	—	—	—
3375	1786	8.9	1859	9.3	—	—	—	—	—	—
3565	1836	9.2	—	—	—	—	—	—	—	—
3750	1888	9.4	—	—	—	—	—	—	—	—

Std/Med Static 987-2000 rpm

48FEFM08 — High Static — 7.5 Ton Horizontal Supply (rpm - vdc)

CFM	AVAILABLE EXTERNAL STATIC PRESSURE (in. wg)									
	0.2		0.4		0.6		0.8		1.0	
	rpm	vdc	rpm	vdc	rpm	vdc	rpm	vdc	rpm	vdc
2250	987	4.4	1114	5.0	1227	5.5	1331	6.0	1428	6.4
2440	1047	4.7	1168	5.2	1277	5.7	1377	6.2	1471	6.6
2625	1109	5.0	1223	5.5	1328	6.0	1424	6.4	1515	6.8
2815	1171	5.3	1280	5.8	1380	6.2	1474	6.6	1561	7.1
3000	1234	5.5	1338	6.0	1434	6.5	1524	6.9	1609	7.3
3190	1298	5.8	1397	6.3	1490	6.7	1577	7.1	1659	7.5
3375	1363	6.1	1458	6.6	1546	7.0	1630	7.4	1710	7.7
3565	1428	6.4	1519	6.9	1604	7.2	1685	7.6	1762	8.0
3750	1494	6.7	1580	7.1	1663	7.5	1741	7.9	1816	8.2

CFM	AVAILABLE EXTERNAL STATIC PRESSURE (in. wg)									
	1.2		1.4		1.6		1.8		2.0	
	rpm	vdc	rpm	vdc	rpm	vdc	rpm	vdc	rpm	vdc
2250	1518	6.9	1602	7.2	1682	7.6	1757	8.0	1830	8.3
2440	1558	7.0	1641	7.4	1719	7.8	1794	8.1	1865	8.5
2625	1600	7.2	1681	7.6	1758	8.0	1831	8.3	1902	8.6
2815	1644	7.4	1723	7.8	1798	8.1	1871	8.5	1940	8.8
3000	1690	7.6	1767	8.0	1841	8.3	1911	8.7	1979	9.0
3190	1737	7.9	1813	8.2	1884	8.5	1954	8.9	2020	9.2
3375	1786	8.1	1859	8.4	1930	8.8	1997	9.1	2063	9.4
3565	1836	8.3	1908	8.7	1976	9.0	2042	9.3	—	—
3750	1888	8.6	1957	8.9	2024	9.2	2089	9.5	—	—

High Static 987-2200 rpm

48FEFM09 — 8.5 Ton Horizontal Supply (rpm - bhp)

CFM	AVAILABLE EXTERNAL STATIC PRESSURE (in. wg)									
	0.2		0.4		0.6		0.8		1.0	
	rpm	bhp	rpm	bhp	rpm	bhp	rpm	bhp	rpm	bhp
2550	1026	0.40	1140	0.55	1248	0.72	1349	0.91	1442	1.11
2765	1092	0.48	1199	0.63	1301	0.80	1398	1.00	1488	1.20
2975	1160	0.56	1261	0.72	1357	0.90	1449	1.10	1536	1.31
3190	1229	0.66	1323	0.83	1414	1.01	1502	1.21	1586	1.42
3400	1298	0.77	1387	0.94	1473	1.12	1557	1.33	1638	1.55
3615	1368	0.88	1452	1.06	1535	1.25	1614	1.45	1692	1.67
3825	1439	1.01	1519	1.19	1597	1.38	1673	1.58	1747	1.80
4040	1511	1.14	1586	1.32	1660	1.51	1733	1.72	1804	1.94
4250	1582	1.27	1654	1.45	1725	1.64	1795	1.85	1863	2.07

CFM	AVAILABLE EXTERNAL STATIC PRESSURE (in. wg)									
	1.2		1.4		1.6		1.8		2.0	
	rpm	bhp	rpm	bhp	rpm	bhp	rpm	bhp	rpm	bhp
2550	1529	1.32	1611	1.54	1688	1.77	1761	2.01	1830	2.26
2765	1573	1.42	1654	1.65	1730	1.89	1802	2.14	1870	2.39
2975	1619	1.53	1698	1.77	1773	2.01	1844	2.27	1911	2.52
3190	1667	1.65	1743	1.89	1817	2.14	1887	2.40	1954	2.66
3400	1716	1.78	1790	2.02	1862	2.27	1931	2.53	1997	2.80
3615	1767	1.91	1839	2.15	1909	2.40	1977	2.67	2041	2.94
3825	1820	2.04	1890	2.28	1958	2.54	2024	2.80	2087	3.07
4040	1874	2.17	1942	2.42	2008	2.67	2072	2.93	—	—
4250	1930	2.30	1996	2.55	2060	2.80	2122	3.06	—	—

Std/Med Static 1026-2000 rpm, 2.4 maximum bhp

High Static 1026-2200 rpm, 3.0 maximum bhp

48FEFM09 — Standard/Medium Static — 8.5 Ton Horizontal Supply (rpm - vdc)

CFM	AVAILABLE EXTERNAL STATIC PRESSURE (in. wg)									
	0.2		0.4		0.6		0.8		1.0	
	rpm	vdc	rpm	vdc	rpm	vdc	rpm	vdc	rpm	vdc
2550	1026	5.0	1140	5.6	1248	6.1	1349	6.7	1442	7.1
2765	1092	5.3	1199	5.9	1301	6.4	1398	6.9	1488	7.4
2975	1160	5.7	1261	6.2	1357	6.7	1449	7.2	1536	7.6
3190	1229	6.0	1323	6.5	1414	7.0	1502	7.4	1586	7.9
3400	1298	6.4	1387	6.8	1473	7.3	1557	7.7	1638	8.1
3615	1368	6.7	1452	7.2	1535	7.6	1614	8.0	1692	8.4
3825	1439	7.1	1519	7.5	1597	7.9	1673	8.3	1747	8.7
4040	1511	7.5	1586	7.9	1660	8.3	1733	8.6	1804	9.0
4250	1582	7.9	1654	8.2	1725	8.6	1795	8.9	1863	9.3

CFM	AVAILABLE EXTERNAL STATIC PRESSURE (in. wg)									
	1.2		1.4		1.6		1.8		2.0	
	rpm	vdc	rpm	vdc	rpm	vdc	rpm	vdc	rpm	vdc
2550	1529	7.6	1611	8.0	1688	8.4	1761	8.8	1830	9.1
2765	1573	7.8	1654	8.2	1730	8.6	1802	9.0	1870	9.3
2975	1619	8.0	1698	8.4	1773	8.8	1844	9.2	—	—
3190	1667	8.3	1743	8.7	1817	9.1	1887	9.4	—	—
3400	1716	8.5	1790	8.9	1862	9.3	—	—	—	—
3615	1767	8.8	1839	9.2	1909	9.5	—	—	—	—
3825	1820	9.1	1890	9.4	—	—	—	—	—	—
4040	1874	9.4	—	—	—	—	—	—	—	—
4250	1930	9.6	—	—	—	—	—	—	—	—

Std/Med Static 1026-2000 rpm

48FEFM09 — High Static — 8.5 Ton Horizontal Supply (rpm - vdc)

CFM	AVAILABLE EXTERNAL STATIC PRESSURE (in. wg)									
	0.2		0.4		0.6		0.8		1.0	
	rpm	vdc	rpm	vdc	rpm	vdc	rpm	vdc	rpm	vdc
2550	1026	4.6	1140	5.1	1248	5.6	1349	6.1	1442	6.5
2765	1092	4.9	1199	5.4	1301	5.9	1398	6.3	1488	6.7
2975	1160	5.2	1261	5.7	1357	6.1	1449	6.5	1536	6.9
3190	1229	5.5	1323	6.0	1414	6.4	1502	6.8	1586	7.2
3400	1298	5.8	1387	6.2	1473	6.6	1557	7.0	1638	7.4
3615	1368	6.2	1452	6.5	1535	6.9	1614	7.3	1692	7.7
3825	1439	6.5	1519	6.9	1597	7.2	1673	7.6	1747	7.9
4040	1511	6.8	1586	7.2	1660	7.5	1733	7.8	1804	8.2
4250.0	1582	7.1	1654	7.5	1725	7.8	1795	8.1	1863	8.4

CFM	AVAILABLE EXTERNAL STATIC PRESSURE (in. wg)									
	1.2		1.4		1.6		1.8		2.0	
	rpm	vdc	rpm	vdc	rpm	vdc	rpm	vdc	rpm	vdc
2550	1529	6.9	1611	7.3	1688	7.6	1761	8.0	1830	8.3
2765	1573	7.1	1654	7.5	1730	7.8	1802	8.2	1870	8.5
2975	1619	7.3	1698	7.7	1773	8.0	1844	8.4	1911	8.7
3190	1667	7.5	1743	7.9	1817	8.2	1887	8.6	1954	8.9
3400	1716	7.8	1790	8.1	1862	8.4	1931	8.8	1997	9.1
3615	1767	8.0	1839	8.3	1909	8.7	1977	9.0	2041	9.3
3825	1820	8.2	1890	8.6	1958	8.9	2024	9.2	2087	9.5
4040	1874	8.5	1942	8.8	2008	9.1	2072	9.4	—	—
4250	1930	8.8	1996	9.1	2060	9.4	2122	9.6	—	—

High Static 1026-2200 rpm

48FEFM12 — 10 Ton Horizontal Supply (rpm - bhp)

CFM	AVAILABLE EXTERNAL STATIC PRESSURE (in. wg)									
	0.2		0.4		0.6		0.8		1.0	
	rpm	bhp	rpm	bhp	rpm	bhp	rpm	bhp	rpm	bhp
3000	1188	0.62	1288	0.78	1384	0.97	1475	1.18	1562	1.40
3250	1271	0.75	1364	0.92	1454	1.12	1540	1.33	1623	1.55
3500	1355	0.89	1441	1.07	1526	1.27	1608	1.49	1687	1.72
3750	1439	1.05	1521	1.24	1600	1.45	1678	1.67	1753	1.90
4000	1525	1.23	1601	1.42	1676	1.63	1750	1.86	1822	2.10
4250	1611	1.42	1683	1.62	1754	1.83	1824	2.06	1892	2.30
4500	1697	1.62	1765	1.82	1833	2.04	1899	2.27	1965	2.51
4750	1784	1.83	1849	2.03	1913	2.25	1976	2.48	2038	2.72
5000	1872	2.04	1933	2.25	1994	2.47	2054	2.70	2114	2.94

CFM	AVAILABLE EXTERNAL STATIC PRESSURE (in. wg)									
	1.2		1.4		1.6		1.8		2.0	
	rpm	bhp	rpm	bhp	rpm	bhp	rpm	bhp	rpm	bhp
3000	1644	1.63	1722	1.87	1796	2.13	1866	2.38	1933	2.65
3250	1702	1.79	1778	2.04	1850	2.30	1919	2.57	1985	2.84
3500	1763	1.96	1836	2.22	1906	2.48	1974	2.76	2039	3.04
3750	1826	2.15	1897	2.41	1965	2.68	2031	2.96	2094	3.24
4000	1892	2.35	1960	2.61	2026	2.89	2090	3.17	2152	3.46
4250	1959	2.56	2025	2.82	2088	3.09	2150	3.38	—	—
4500	2029	2.77	2092	3.03	2153	3.31	—	—	—	—
4750	2100	2.98	2160	3.24	—	—	—	—	—	—
5000	2173	3.19	—	—	—	—	—	—	—	—

Std/Med Static 1188-2000 rpm, 2.4 maximum bhp

High Static 1188-2200 rpm, 5.0 maximum bhp

48FEFM12 — Standard/Medium Static — 10 Ton Horizontal Supply (rpm - vdc)

CFM	AVAILABLE EXTERNAL STATIC PRESSURE (in. wg)									
	0.2		0.4		0.6		0.8		1.0	
	rpm	vdc	rpm	vdc	rpm	vdc	rpm	vdc	rpm	vdc
3000	1188	5.8	1288	6.3	1384	6.8	1475	7.3	1562	7.7
3250	1271	6.3	1364	6.7	1454	7.2	1540	7.6	1623	8.1
3500	1355	6.7	1441	7.1	1526	7.6	1608	8.0	1687	8.4
3750	1439	7.1	1521	7.5	1600	7.9	1678	8.3	1753	8.7
4000	1525	7.6	1601	7.9	1676	8.3	1750	8.7	1822	9.1
4250	1611	8.0	1683	8.4	1754	8.7	1824	9.1	1892	9.4
4500	1697	8.4	1765	8.8	1833	9.1	1899	9.5	—	—
4750	1784	8.9	1849	9.2	1913	9.6	—	—	—	—
5000	1872	9.3	1933	9.7	—	—	—	—	—	—

CFM	AVAILABLE EXTERNAL STATIC PRESSURE (in. wg)									
	1.2		1.4		1.6		1.8		2.0	
	rpm	vdc	rpm	vdc	rpm	vdc	rpm	vdc	rpm	vdc
3000	1644	8.2	1722	8.6	1796	9.0	1866	9.3	—	—
3250	1702	8.5	1778	8.9	1850	9.2	—	—	—	—
3500	1763	8.8	1836	9.2	1906	9.5	—	—	—	—
3750	1826	9.1	1897	9.5	—	—	—	—	—	—
4000	1892	9.4	—	—	—	—	—	—	—	—
4250	—	—	—	—	—	—	—	—	—	—
4500	—	—	—	—	—	—	—	—	—	—
4750	—	—	—	—	—	—	—	—	—	—
5000	—	—	—	—	—	—	—	—	—	—

Std/Med Static 1188-2000 rpm

48FEFM12 — High Static — 10 Ton Horizontal Supply (rpm - vdc)

CFM	AVAILABLE EXTERNAL STATIC PRESSURE (in. wg)									
	0.2		0.4		0.6		0.8		1.0	
	rpm	vdc	rpm	vdc	rpm	vdc	rpm	vdc	rpm	vdc
3000	1188	5.3	1288	5.8	1384	6.2	1475	6.7	1562	7.1
3250	1271	5.7	1364	6.1	1454	6.6	1540	7.0	1623	7.3
3500	1355	6.1	1441	6.5	1526	6.9	1608	7.3	1687	7.6
3750	1439	6.5	1521	6.9	1600	7.2	1678	7.6	1753	7.9
4000	1525	6.9	1601	7.2	1676	7.6	1750	7.9	1822	8.3
4250	1611	7.3	1683	7.6	1754	7.9	1824	8.3	1892	8.6
4500	1697	7.7	1765	8.0	1833	8.3	1899	8.6	1965	8.9
4750	1784	8.1	1849	8.4	1913	8.7	1976	9.0	2038	9.3
5000	1872	8.5	1933	8.8	1994	9.0	2054	9.3	2114	9.6

CFM	AVAILABLE EXTERNAL STATIC PRESSURE (in. wg)									
	1.2		1.4		1.6		1.8		2.0	
	rpm	vdc	rpm	vdc	rpm	vdc	rpm	vdc	rpm	vdc
3000	1644	7.4	1722	7.8	1796	8.1	1866	8.5	1933	8.8
3250	1702	7.7	1778	8.1	1850	8.4	1919	8.7	1985	9.0
3500	1763	8.0	1836	8.3	1906	8.6	1974	9.0	2039	9.3
3750	1826	8.3	1897	8.6	1965	8.9	2031	9.2	2094	9.5
4000	1892	8.6	1960	8.9	2026	9.2	2090	9.5	2152	9.8
4250	1959	8.9	2025	9.2	2088	9.5	2150	9.8	—	—
4500	2029	9.2	2092	9.5	2153	9.8	—	—	—	—
4750	2100	9.5	2160	9.8	—	—	—	—	—	—
5000	2173	9.9	—	—	—	—	—	—	—	—

High Static 1188-2200 rpm

48FEFM14 — 12.5 Ton Horizontal Supply (rpm - bhp)

CFM	AVAILABLE EXTERNAL STATIC PRESSURE (in. wg)									
	0.2		0.4		0.6		0.8		1.0	
	rpm	bhp	rpm	bhp	rpm	bhp	rpm	bhp	rpm	bhp
3750	1198	0.90	1298	1.15	1393	1.42	1483	1.72	1566	2.02
4065	1282	1.10	1374	1.36	1464	1.64	1550	1.95	1631	2.27
4375	1367	1.33	1453	1.60	1537	1.90	1619	2.21	1697	2.55
4690	1453	1.59	1533	1.87	1613	2.18	1690	2.51	1765	2.86
5000	1540	1.89	1615	2.17	1690	2.49	1763	2.83	1835	3.19
5315	1628	2.21	1697	2.50	1768	2.83	1838	3.18	1906	3.55
5625	1715	2.56	1781	2.86	1847	3.19	1914	3.55	1979	3.93
5940	1804	2.94	1866	3.25	1929	3.59	1992	3.95	2054	4.33
6250	1892	3.34	1951	3.66	2011	4.01	2071	4.37	2131	4.77

CFM	AVAILABLE EXTERNAL STATIC PRESSURE (in. wg)									
	1.2		1.4		1.6		1.8		2.0	
	rpm	bhp	rpm	bhp	rpm	bhp	rpm	bhp	rpm	bhp
3750	1644	2.34	1718	2.67	1787	3.00	1854	3.35	1917	3.70
4065	1707	2.61	1778	2.95	1847	3.30	1912	3.66	1974	4.03
4375	1771	2.90	1841	3.26	1908	3.63	1971	4.00	2033	4.39
4690	1836	3.22	1905	3.59	1970	3.97	2033	4.37	2093	4.76
5000	1904	3.56	1970	3.95	2034	4.34	2095	4.75	2154	5.16
5315	1973	3.93	2037	4.33	2099	4.74	2159	5.15	—	—
5625	2043	4.32	2106	4.73	2166	5.15	—	—	—	—
5940	2116	4.74	2176	5.15	—	—	—	—	—	—
6250	2189	5.17	—	—	—	—	—	—	—	—

Std/Med Static 1198-2200 rpm, 3.0 maximum bhp

High Static 1198-2200 rpm, 5.0 maximum bhp

48FEFM14 — Standard/Medium Static — 12.5 Ton Horizontal Supply (rpm - vdc)

CFM	AVAILABLE EXTERNAL STATIC PRESSURE (in. wg)									
	0.2		0.4		0.6		0.8		1.0	
	rpm	vdc	rpm	vdc	rpm	vdc	rpm	vdc	rpm	vdc
3750	1198	5.4	1298	5.8	1393	6.3	1483	6.7	1566	7.1
4065	1282	5.8	1374	6.2	1464	6.6	1550	7.0	1631	7.4
4375	1367	6.2	1453	6.6	1537	6.9	1619	7.3	1697	7.7
4690	1453	6.6	1533	6.9	1613	7.3	1690	7.6	1765	8.0
5000	1540	7.0	1615	7.3	1690	7.6	1763	8.0	—	—
5315	1628	7.4	1697	7.7	1768	8.0	—	—	—	—
5625	1715	7.8	1781	8.1	—	—	—	—	—	—
5940	1804	8.2	—	—	—	—	—	—	—	—
6250	—	—	—	—	—	—	—	—	—	—

CFM	AVAILABLE EXTERNAL STATIC PRESSURE (in. wg)									
	1.2		1.4		1.6		1.8		2.0	
	rpm	vdc	rpm	vdc	rpm	vdc	rpm	vdc	rpm	vdc
3750	1644	7.4	1718	7.8	1787	8.1	—	—	—	—
4065	1707	7.7	1778	8.1	—	—	—	—	—	—
4375	1771	8.0	—	—	—	—	—	—	—	—
4690	—	—	—	—	—	—	—	—	—	—
5000	—	—	—	—	—	—	—	—	—	—
5315	—	—	—	—	—	—	—	—	—	—
5625	—	—	—	—	—	—	—	—	—	—
5940	—	—	—	—	—	—	—	—	—	—
6250	—	—	—	—	—	—	—	—	—	—

Std/Med Static 1198-2200 rpm

48FEFM14 — High Static — 12.5 Ton Horizontal Supply (rpm - vdc)

CFM	AVAILABLE EXTERNAL STATIC PRESSURE (in. wg)									
	0.2		0.4		0.6		0.8		1.0	
	rpm	vdc	rpm	vdc	rpm	vdc	rpm	vdc	rpm	vdc
3750	1198	5.4	1298	5.8	1393	6.3	1483	6.7	1566	7.1
4065	1282	5.8	1374	6.2	1464	6.6	1550	7.0	1631	7.4
4375	1367	6.2	1453	6.6	1537	6.9	1619	7.3	1697	7.7
4690	1453	6.6	1533	6.9	1613	7.3	1690	7.6	1765	8.0
5000	1540	7.0	1615	7.3	1690	7.6	1763	8.0	1835	8.3
5315	1628	7.4	1697	7.7	1768	8.0	1838	8.3	1906	8.6
5625	1715	7.8	1781	8.1	1847	8.4	1914	8.7	1979	9.0
5940	1804	8.2	1866	8.5	1929	8.7	1992	9.0	2054	9.3
6250	1892	8.6	1951	8.9	2011	9.1	2071	9.4	2131	9.7

CFM	AVAILABLE EXTERNAL STATIC PRESSURE (in. wg)									
	1.2		1.4		1.6		1.8		2.0	
	rpm	vdc	rpm	vdc	rpm	vdc	rpm	vdc	rpm	vdc
3750	1644	7.4	1718	7.8	1787	8.1	1854	8.4	1917	8.7
4065	1707	7.7	1778	8.1	1847	8.4	1912	8.7	1974	9.0
4375	1771	8.0	1841	8.3	1908	8.7	1971	8.9	2033	9.2
4690	1836	8.3	1905	8.6	1970	8.9	2033	9.2	2093	9.5
5000	1904	8.6	1970	8.9	2034	9.2	2095	9.5	2154	9.8
5315	1973	9.0	2037	9.2	2099	9.5	2159	9.8	—	—
5625	2043	9.3	2106	9.6	2166	9.8	—	—	—	—
5940	2116	9.6	2176	9.9	—	—	—	—	—	—
6250	2189	9.9	—	—	—	—	—	—	—	—

High Static 1198-2200 rpm

48FEFM16 — 15 Ton Horizontal Supply (rpm - bhp)

CFM	AVAILABLE EXTERNAL STATIC PRESSURE (in. wg)									
	0.2		0.4		0.6		0.8		1.0	
	rpm	bhp	rpm	bhp	rpm	bhp	rpm	bhp	rpm	bhp
4500	1248	1.02	1328	1.22	1408	1.46	1487	1.72	1566	2.01
4875	1339	1.25	1413	1.47	1487	1.71	1561	1.98	1634	2.27
5250	1431	1.51	1500	1.74	1568	1.98	1637	2.26	1705	2.55
5625	1524	1.80	1588	2.03	1652	2.29	1716	2.57	1780	2.87
6000	1617	2.11	1677	2.36	1737	2.62	1797	2.90	1857	3.20
6375	1711	2.46	1767	2.71	1824	2.98	1881	3.26	1937	3.56
6750	1805	2.83	1858	3.09	1912	3.37	1965	3.65	2019	3.96
7125	1899	3.26	1950	3.53	2001	3.82	2051	4.11	2102	4.42
7500	1994	3.79	2042	4.07	2090	4.36	2139	4.68	2187	5.00

CFM	AVAILABLE EXTERNAL STATIC PRESSURE (in. wg)									
	1.2		1.4		1.6		1.8		2.0	
	rpm	bhp	rpm	bhp	rpm	bhp	rpm	bhp	rpm	bhp
4500	1642	2.31	1717	2.64	1790	3.00	1861	3.37	1929	3.75
4875	1705	2.58	1776	2.91	1845	3.26	1913	3.64	1979	4.03
5250	1773	2.87	1839	3.20	1905	3.56	1970	3.94	2033	4.33
5625	1843	3.18	1906	3.52	1968	3.87	2030	4.25	2090	4.64
6000	1917	3.52	1976	3.86	2035	4.21	2094	4.59	2151	4.97
6375	1993	3.88	2050	4.22	2105	4.57	2161	4.95	—	—
6750	2072	4.28	2125	4.62	2178	4.98	—	—	—	—
7125	2153	4.75	—	—	—	—	—	—	—	—
7500	—	—	—	—	—	—	—	—	—	—

Std/Med Static 1248-2200 rpm, 3.0 maximum bhp

High Static 1248-2200 rpm, 5.0 maximum bhp

48FEFM16 — Standard/Medium Static — 15 Ton Horizontal Supply (rpm - vdc)

CFM	AVAILABLE EXTERNAL STATIC PRESSURE (in. wg)									
	0.2		0.4		0.6		0.8		1.0	
	rpm	vdc	rpm	vdc	rpm	vdc	rpm	vdc	rpm	vdc
4500	1248	5.6	1328	6.0	1408	6.3	1487	6.7	1566	7.1
4875	1339	6.0	1413	6.4	1487	6.7	1561	7.1	1634	7.4
5250	1431	6.5	1500	6.8	1568	7.1	1637	7.4	1705	7.7
5625	1524	6.9	1588	7.2	1652	7.5	1716	7.8	1780	8.1
6000	1617	7.3	1677	7.6	1737	7.9	1797	8.1	—	—
6375	1711	7.7	1767	8.0	1824	8.3	—	—	—	—
6750	1805	8.2	—	—	—	—	—	—	—	—
7125	—	—	—	—	—	—	—	—	—	—
7500	—	—	—	—	—	—	—	—	—	—

CFM	AVAILABLE EXTERNAL STATIC PRESSURE (in. wg)									
	1.2		1.4		1.6		1.8		2.0	
	rpm	vdc	rpm	vdc	rpm	vdc	rpm	vdc	rpm	vdc
4500	1642	7.4	1717	7.8	—	—	—	—	—	—
4875	1705	7.7	1776	8.0	—	—	—	—	—	—
5250	1773	8.0	—	—	—	—	—	—	—	—
5625	—	—	—	—	—	—	—	—	—	—
6000	—	—	—	—	—	—	—	—	—	—
6375	—	—	—	—	—	—	—	—	—	—
6750	—	—	—	—	—	—	—	—	—	—
7125	—	—	—	—	—	—	—	—	—	—
7500	—	—	—	—	—	—	—	—	—	—

Std/Med Static 1248-2200 rpm

Fan data (cont)

48FEFM16 — High Static — 15 Ton Horizontal Supply (rpm - vdc)

CFM	AVAILABLE EXTERNAL STATIC PRESSURE (in. wg)									
	0.2		0.4		0.6		0.8		1.0	
	rpm	vdc	rpm	vdc	rpm	vdc	rpm	vdc	rpm	vdc
4500	1248	5.6	1328	6.0	1408	6.3	1487	6.7	1566	7.1
4875	1339	6.0	1413	6.4	1487	6.7	1561	7.1	1634	7.4
5250	1431	6.5	1500	6.8	1568	7.1	1637	7.4	1705	7.7
5625	1524	6.9	1588	7.2	1652	7.5	1716	7.8	1780	8.1
6000	1617	7.3	1677	7.6	1737	7.9	1797	8.1	1857	8.4
6375	1711	7.7	1767	8.0	1824	8.3	1881	8.5	1937	8.8
6750	1805	8.2	1858	8.4	1912	8.7	1965	8.9	2019	9.2
7125	1899	8.6	1950	8.8	2001	9.1	2051	9.3	2102	9.5
7500	1994	9.0	2042	9.3	2090	9.5	2139	9.7	2187	9.9

CFM	AVAILABLE EXTERNAL STATIC PRESSURE (in. wg)									
	1.2		1.4		1.6		1.8		2.0	
	rpm	vdc	rpm	vdc	rpm	vdc	rpm	vdc	rpm	vdc
4500	1642	7.4	1717	7.8	1790	8.1	1861	8.4	1929	8.7
4875	1705	7.7	1776	8.0	1845	8.4	1913	8.7	1979	9.0
5250	1773	8.0	1839	8.3	1905	8.6	1970	8.9	2033	9.2
5625	1843	8.4	1906	8.6	1968	8.9	2030	9.2	2090	9.5
6000	1917	8.7	1976	9.0	2035	9.2	2094	9.5	2151	9.8
6375	1993	9.0	2050	9.3	2105	9.6	2161	9.8	—	—
6750	2072	9.4	2125	9.7	2178	9.9	—	—	—	—
7125	2153	9.8	—	—	—	—	—	—	—	—
7500	—	—	—	—	—	—	—	—	—	—

High Static 1248-2200 rpm

50FE-M08 — 7.5 Ton Vertical Supply (rpm - bhp)

CFM	AVAILABLE EXTERNAL STATIC PRESSURE (in. wg)									
	0.2		0.4		0.6		0.8		1.0	
	rpm	bhp	rpm	bhp	rpm	bhp	rpm	bhp	rpm	bhp
2250	970	0.34	1102	0.50	1216	0.68	1319	0.86	1414	1.07
2440	1031	0.41	1157	0.58	1267	0.76	1367	0.96	1459	1.17
2625	1092	0.49	1213	0.67	1320	0.86	1416	1.06	1506	1.28
2815	1155	0.57	1271	0.76	1374	0.96	1467	1.17	1554	1.39
3000	1219	0.66	1330	0.86	1429	1.07	1520	1.29	1605	1.52
3190	1284	0.77	1390	0.97	1486	1.19	1574	1.41	1656	1.64
3375	1349	0.87	1451	1.09	1544	1.31	1629	1.54	1709	1.78
3565	1415	0.99	1513	1.21	1603	1.44	1686	1.68	1764	1.92
3750	1481	1.11	1576	1.34	1662	1.57	1743	1.81	1819	2.06

CFM	AVAILABLE EXTERNAL STATIC PRESSURE (in. wg)									
	1.2		1.4		1.6		1.8		2.0	
	rpm	bhp	rpm	bhp	rpm	bhp	rpm	bhp	rpm	bhp
2250	1502	1.28	1585	1.50	1664	1.74	1739	1.98	1810	2.23
2440	1545	1.38	1626	1.61	1703	1.85	1777	2.11	1847	2.37
2625	1589	1.50	1669	1.74	1745	1.98	1817	2.24	1886	2.51
2815	1636	1.62	1713	1.86	1788	2.12	1858	2.38	1926	2.65
3000	1684	1.75	1760	2.00	1832	2.26	1901	2.52	1968	2.80
3190	1734	1.89	1808	2.14	1878	2.40	1946	2.67	2012	2.95
3375	1785	2.03	1857	2.28	1926	2.55	1992	2.82	2057	3.10
3565	1837	2.17	1908	2.43	1975	2.69	2040	2.97	—	—
3750	1891	2.31	1960	2.57	2026	2.84	2089	3.11	—	—

Std/Med Static 970-2000 rpm, 2.4 maximum bhp

High Static 970-2200 rpm, 3.0 maximum bhp

50FE-M08 — Standard/Medium Static — 7.5 Ton Vertical Supply (rpm - vdc)

CFM	AVAILABLE EXTERNAL STATIC PRESSURE (in. wg)									
	0.2		0.4		0.6		0.8		1.0	
	rpm	vdc	rpm	vdc	rpm	vdc	rpm	vdc	rpm	vdc
2250	970	4.7	1102	5.4	1216	6.0	1319	6.5	1414	7.0
2440	1031	5.0	1157	5.7	1267	6.2	1367	6.7	1459	7.2
2625	1092	5.3	1213	6.0	1320	6.5	1416	7.0	1506	7.5
2815	1155	5.7	1271	6.3	1374	6.8	1467	7.3	1554	7.7
3000	1219	6.0	1330	6.6	1429	7.1	1520	7.5	1605	8.0
3190	1284	6.3	1390	6.9	1486	7.4	1574	7.8	1656	8.2
3375	1349	6.7	1451	7.2	1544	7.7	1629	8.1	1709	8.5
3565	1415	7.0	1513	7.5	1603	8.0	1686	8.4	1764	8.8
3750	1481	7.3	1576	7.8	1662	8.3	1743	8.7	1819	9.1

CFM	AVAILABLE EXTERNAL STATIC PRESSURE (in. wg)									
	1.2		1.4		1.6		1.8		2.0	
	rpm	vdc	rpm	vdc	rpm	vdc	rpm	vdc	rpm	vdc
2250	1502	7.4	1585	7.9	1664	8.3	1739	8.7	1810	9.0
2440	1545	7.7	1626	8.1	1703	8.5	1777	8.9	1847	9.2
2625	1589	7.9	1669	8.3	1745	8.7	1817	9.1	—	—
2815	1636	8.1	1713	8.5	1788	8.9	1858	9.3	—	—
3000	1684	8.4	1760	8.8	1832	9.1	—	—	—	—
3190	1734	8.6	1808	9.0	1878	9.4	—	—	—	—
3375	1785	8.9	1857	9.3	—	—	—	—	—	—
3565	1837	9.2	—	—	—	—	—	—	—	—
3750	1891	9.4	—	—	—	—	—	—	—	—

Std/Med Static 970-2000 rpm

50FE-M08 — High Static — 7.5 Ton Vertical Supply (rpm - vdc)

CFM	AVAILABLE EXTERNAL STATIC PRESSURE (in. wg)									
	0.2		0.4		0.6		0.8		1.0	
	rpm	vdc	rpm	vdc	rpm	vdc	rpm	vdc	rpm	vdc
2250	970	4.3	1102	4.9	1216	5.5	1319	5.9	1414	6.4
2440	1031	4.6	1157	5.2	1267	5.7	1367	6.2	1459	6.6
2625	1092	4.9	1213	5.4	1320	5.9	1416	6.4	1506	6.8
2815	1155	5.2	1271	5.7	1374	6.2	1467	6.6	1554	7.0
3000	1219	5.5	1330	6.0	1429	6.4	1520	6.9	1605	7.3
3190	1284	5.8	1390	6.3	1486	6.7	1574	7.1	1656	7.5
3375	1349	6.1	1451	6.5	1544	7.0	1629	7.4	1709	7.7
3565	1415	6.4	1513	6.8	1603	7.2	1686	7.6	1764	8.0
3750	1481	6.7	1576	7.1	1662	7.5	1743	7.9	1819	8.2

CFM	AVAILABLE EXTERNAL STATIC PRESSURE (in. wg)									
	1.2		1.4		1.6		1.8		2.0	
	rpm	vdc	rpm	vdc	rpm	vdc	rpm	vdc	rpm	vdc
2250	1502	6.8	1585	7.2	1664	7.5	1739	7.9	1810	8.2
2440	1545	7.0	1626	7.4	1703	7.7	1777	8.0	1847	8.4
2625	1589	7.2	1669	7.5	1745	7.9	1817	8.2	1886	8.6
2815	1636	7.4	1713	7.8	1788	8.1	1858	8.4	1926	8.7
3000	1684	7.6	1760	8.0	1832	8.3	1901	8.6	1968	8.9
3190	1734	7.8	1808	8.2	1878	8.5	1946	8.8	2012	9.1
3375	1785	8.1	1857	8.4	1926	8.7	1992	9.0	2057	9.3
3565	1837	8.3	1908	8.7	1975	9.0	2040	9.3	—	—
3750	1891	8.6	1960	8.9	2026	9.2	2089	9.5	—	—

High Static 970-2200 rpm

50FE-M09 — 8.5 Ton Vertical Supply (rpm - bhp)

CFM	AVAILABLE EXTERNAL STATIC PRESSURE (in. wg)									
	0.2		0.4		0.6		0.8		1.0	
	rpm	bhp	rpm	bhp	rpm	bhp	rpm	bhp	rpm	bhp
2550	1015	0.39	1128	0.53	1233	0.69	1330	0.87	1421	1.06
2765	1084	0.47	1190	0.62	1289	0.78	1382	0.96	1470	1.16
2975	1154	0.56	1253	0.71	1348	0.89	1437	1.07	1521	1.27
3190	1225	0.66	1319	0.82	1408	1.00	1493	1.19	1574	1.39
3400	1297	0.77	1386	0.94	1470	1.12	1551	1.31	1629	1.52
3615	1370	0.89	1453	1.06	1534	1.25	1612	1.45	1687	1.66
3825	1443	1.02	1522	1.19	1599	1.38	1673	1.58	1745	1.80
4040	1517	1.15	1592	1.33	1665	1.52	1736	1.73	1806	1.94
4250	1591	1.29	1663	1.47	1733	1.67	1801	1.87	1867	2.09

CFM	AVAILABLE EXTERNAL STATIC PRESSURE (in. wg)									
	1.2		1.4		1.6		1.8		2.0	
	rpm	bhp	rpm	bhp	rpm	bhp	rpm	bhp	rpm	bhp
2550	1506	1.26	1586	1.47	1662	1.69	1734	1.92	1802	2.16
2765	1552	1.37	1630	1.58	1705	1.81	1776	2.05	1843	2.29
2975	1601	1.48	1677	1.70	1750	1.94	1819	2.17	1886	2.42
3190	1652	1.61	1726	1.84	1796	2.07	1864	2.31	1930	2.57
3400	1704	1.74	1776	1.97	1845	2.21	1911	2.45	1975	2.71
3615	1759	1.88	1828	2.11	1895	2.35	1960	2.60	2023	2.86
3825	1815	2.02	1882	2.25	1947	2.50	2011	2.75	2072	3.01
4040	1873	2.17	1938	2.40	2001	2.64	2063	2.90	2122	3.15
4250	1932	2.31	1995	2.54	2056	2.78	2116	3.04	—	—

Std/Med Static 1015-2000 rpm, 2.4 maximum bhp

High Static 1015-2200 rpm, 3.0 maximum bhp

50FE-M09 — Standard/Medium Static — 8.5 Ton Vertical Supply (rpm - vdc)

CFM	AVAILABLE EXTERNAL STATIC PRESSURE (in. wg)									
	0.2		0.4		0.6		0.8		1.0	
	rpm	vdc	rpm	vdc	rpm	vdc	rpm	vdc	rpm	vdc
2550	1015	4.9	1128	5.5	1233	6.1	1330	6.6	1421	7.0
2765	1084	5.3	1190	5.8	1289	6.3	1382	6.8	1470	7.3
2975	1154	5.6	1253	6.2	1348	6.6	1437	7.1	1521	7.5
3190	1225	6.0	1319	6.5	1408	7.0	1493	7.4	1574	7.8
3400	1297	6.4	1386	6.8	1470	7.3	1551	7.7	1629	8.1
3615	1370	6.8	1453	7.2	1534	7.6	1612	8.0	1687	8.4
3825	1443	7.1	1522	7.5	1599	7.9	1673	8.3	1745	8.7
4040	1517	7.5	1592	7.9	1665	8.3	1736	8.6	1806	9.0
4250	1591	7.9	1663	8.3	1733	8.6	1801	9.0	1867	9.3

CFM	AVAILABLE EXTERNAL STATIC PRESSURE (in. wg)									
	1.2		1.4		1.6		1.8		2.0	
	rpm	vdc	rpm	vdc	rpm	vdc	rpm	vdc	rpm	vdc
2550	1506	7.5	1586	7.9	1662	8.3	1734	8.6	1802	9.0
2765	1552	7.7	1630	8.1	1705	8.5	1776	8.8	1843	9.2
2975	1601	7.9	1677	8.3	1750	8.7	1819	9.1	—	—
3190	1652	8.2	1726	8.6	1796	9.0	—	—	—	—
3400	1704	8.5	1776	8.8	1845	9.2	—	—	—	—
3615	1759	8.8	1828	9.1	1895	9.5	—	—	—	—
3825	1815	9.0	1882	9.4	—	—	—	—	—	—
4040	1873	9.3	—	—	—	—	—	—	—	—
4250	1932	9.7	—	—	—	—	—	—	—	—

Std/Med Static 1015-2000 rpm

50FE-M09 — High Static — 8.5 Ton Vertical Supply (rpm - vdc)

CFM	AVAILABLE EXTERNAL STATIC PRESSURE (in. wg)									
	0.2		0.4		0.6		0.8		1.0	
	rpm	vdc	rpm	vdc	rpm	vdc	rpm	vdc	rpm	vdc
2550	1015	4.5	1128	5.1	1233	5.5	1330	6.0	1421	6.4
2765	1084	4.8	1190	5.3	1289	5.8	1382	6.2	1470	6.6
2975	1154	5.2	1253	5.6	1348	6.1	1437	6.5	1521	6.9
3190	1225	5.5	1319	5.9	1408	6.3	1493	6.7	1574	7.1
3400	1297	5.8	1386	6.2	1470	6.6	1551	7.0	1629	7.4
3615	1370	6.2	1453	6.6	1534	6.9	1612	7.3	1687	7.6
3825	1443	6.5	1522	6.9	1599	7.2	1673	7.6	1745	7.9
4040	1517	6.8	1592	7.2	1665	7.5	1736	7.9	1806	8.2
4250	1591	7.2	1663	7.5	1733	7.8	1801	8.2	1867	8.5

CFM	AVAILABLE EXTERNAL STATIC PRESSURE (in. wg)									
	1.2		1.4		1.6		1.8		2.0	
	rpm	vdc	rpm	vdc	rpm	vdc	rpm	vdc	rpm	vdc
2550	1506	6.8	1586	7.2	1662	7.5	1734	7.8	1802	8.2
2765	1552	7.0	1630	7.4	1705	7.7	1776	8.0	1843	8.4
2975	1601	7.2	1677	7.6	1750	7.9	1819	8.2	1886	8.6
3190	1652	7.5	1726	7.8	1796	8.1	1864	8.4	1930	8.8
3400	1704	7.7	1776	8.0	1845	8.4	1911	8.7	1975	9.0
3615	1759	8.0	1828	8.3	1895	8.6	1960	8.9	2023	9.2
3825	1815	8.2	1882	8.5	1947	8.8	2011	9.1	2072	9.4
4040	1873	8.5	1938	8.8	2001	9.1	2063	9.4	2122	9.6
4250	1932	8.8	1995	9.1	2056	9.3	2116	9.6	—	—

High Static 1015-2200 rpm

50FE-M12 — 10 Ton Vertical Supply (rpm - bhp)

CFM	AVAILABLE EXTERNAL STATIC PRESSURE (in. wg)									
	0.2		0.4		0.6		0.8		1.0	
	rpm	bhp	rpm	bhp	rpm	bhp	rpm	bhp	rpm	bhp
3000	1181	0.60	1279	0.77	1372	0.95	1461	1.14	1544	1.35
3250	1264	0.73	1356	0.91	1443	1.09	1527	1.29	1607	1.51
3500	1348	0.88	1434	1.06	1517	1.25	1596	1.46	1673	1.68
3750	1433	1.04	1514	1.23	1592	1.43	1667	1.64	1740	1.86
4000	1518	1.21	1595	1.41	1669	1.61	1740	1.83	1810	2.06
4250	1605	1.41	1677	1.60	1747	1.81	1815	2.03	1882	2.27
4500	1691	1.60	1760	1.81	1826	2.02	1892	2.24	1955	2.48
4750	1778	1.81	1843	2.01	1907	2.23	1969	2.46	2030	2.69
5000	1866	2.02	1928	2.23	1988	2.44	2048	2.67	2106	2.91

CFM	AVAILABLE EXTERNAL STATIC PRESSURE (in. wg)									
	1.2		1.4		1.6		1.8		2.0	
	rpm	bhp	rpm	bhp	rpm	bhp	rpm	bhp	rpm	bhp
3000	1624	1.57	1699	1.80	1771	2.04	1840	2.29	1906	2.54
3250	1684	1.73	1757	1.97	1827	2.21	1894	2.47	1958	2.72
3500	1746	1.91	1817	2.15	1884	2.40	1950	2.66	2013	2.92
3750	1811	2.10	1879	2.34	1945	2.60	2008	2.86	2070	3.13
4000	1878	2.30	1943	2.55	2007	2.81	2069	3.08	2128	3.35
4250	1947	2.51	2010	2.76	2071	3.02	2131	3.29	2189	3.56
4500	2017	2.72	2078	2.97	2138	3.24	2195	3.50	—	—
4750	2090	2.94	2148	3.19	—	—	—	—	—	—
5000	2164	3.15	—	—	—	—	—	—	—	—

Std/Med Static 1181-2000 rpm, 2.4 maximum bhp

High Static 1181-2200 rpm, 5.0 maximum bhp

50FE-M12 — Standard/Medium Static — 10 Ton Vertical Supply (rpm - vdc)

CFM	AVAILABLE EXTERNAL STATIC PRESSURE (in. wg)									
	0.2		0.4		0.6		0.8		1.0	
	rpm	vdc	rpm	vdc	rpm	vdc	rpm	vdc	rpm	vdc
3000	1181	5.8	1279	6.3	1372	6.8	1461	7.2	1544	7.7
3250	1264	6.2	1356	6.7	1443	7.1	1527	7.6	1607	8.0
3500	1348	6.6	1434	7.1	1517	7.5	1596	7.9	1673	8.3
3750	1433	7.1	1514	7.5	1592	7.9	1667	8.3	1740	8.7
4000	1518	7.5	1595	7.9	1669	8.3	1740	8.7	1810	9.0
4250	1605	8.0	1677	8.3	1747	8.7	1815	9.0	1882	9.4
4500	1691	8.4	1760	8.8	1826	9.1	1892	9.4	—	—
4750	1778	8.9	1843	9.2	1907	9.5	—	—	—	—
5000	1866	9.3	1928	9.6	1988	9.9	—	—	—	—

CFM	AVAILABLE EXTERNAL STATIC PRESSURE (in. wg)									
	1.2		1.4		1.6		1.8		2.0	
	rpm	vdc	rpm	vdc	rpm	vdc	rpm	vdc	rpm	vdc
3000	1624	8.1	1699	8.5	1771	8.8	1840	9.2	—	—
3250	1684	8.4	1757	8.8	1827	9.1	—	—	—	—
3500	1746	8.7	1817	9.1	1884	9.4	—	—	—	—
3750	1811	9.0	1879	9.4	—	—	—	—	—	—
4000	1878	9.4	—	—	—	—	—	—	—	—
4250	—	—	—	—	—	—	—	—	—	—
4500	—	—	—	—	—	—	—	—	—	—
4750	—	—	—	—	—	—	—	—	—	—
5000	—	—	—	—	—	—	—	—	—	—

Std/Med Static 1181-2000 rpm

50FE-M12 — High Static — 10 Ton Vertical Supply (rpm - vdc)

CFM	AVAILABLE EXTERNAL STATIC PRESSURE (in. wg)									
	0.2		0.4		0.6		0.8		1.0	
	rpm	vdc	rpm	vdc	rpm	vdc	rpm	vdc	rpm	vdc
3000	1181	5.3	1279	5.7	1372	6.2	1461	6.6	1544	7.0
3250	1264	5.7	1356	6.1	1443	6.5	1527	6.9	1607	7.3
3500	1348	6.1	1434	6.5	1517	6.8	1596	7.2	1673	7.6
3750	1433	6.5	1514	6.8	1592	7.2	1667	7.5	1740	7.9
4000	1518	6.9	1595	7.2	1669	7.5	1740	7.9	1810	8.2
4250	1605	7.3	1677	7.6	1747	7.9	1815	8.2	1882	8.5
4500	1691	7.7	1760	8.0	1826	8.3	1892	8.6	1955	8.9
4750	1778	8.1	1843	8.4	1907	8.6	1969	8.9	2030	9.2
5000	1866	8.5	1928	8.7	1988	9.0	2048	9.3	2106	9.6

CFM	AVAILABLE EXTERNAL STATIC PRESSURE (in. wg)									
	1.2		1.4		1.6		1.8		2.0	
	rpm	vdc	rpm	vdc	rpm	vdc	rpm	vdc	rpm	vdc
3000	1624	7.3	1699	7.7	1771	8.0	1840	8.3	1906	8.6
3250	1684	7.6	1757	8.0	1827	8.3	1894	8.6	1958	8.9
3500	1746	7.9	1817	8.2	1884	8.5	1950	8.8	2013	9.1
3750	1811	8.2	1879	8.5	1945	8.8	2008	9.1	2070	9.4
4000	1878	8.5	1943	8.8	2007	9.1	2069	9.4	2128	9.7
4250	1947	8.8	2010	9.1	2071	9.4	2131	9.7	2189	9.9
4500	2017	9.2	2078	9.4	2138	9.7	2195	10.0	—	—
4750	2090	9.5	2148	9.8	—	—	—	—	—	—
5000	2164	9.8	—	—	—	—	—	—	—	—

High Static 1181-2200 rpm

50FE-M14 — 12.5 Ton Vertical Supply (rpm - bhp)

CFM	AVAILABLE EXTERNAL STATIC PRESSURE (in. wg)									
	0.2		0.4		0.6		0.8		1.0	
	rpm	bhp	rpm	bhp	rpm	bhp	rpm	bhp	rpm	bhp
3750	1178	0.86	1287	1.12	1386	1.40	1475	1.69	1558	1.99
4065	1260	1.05	1362	1.32	1456	1.62	1543	1.92	1623	2.24
4375	1343	1.26	1438	1.55	1528	1.86	1612	2.19	1690	2.52
4690	1426	1.51	1516	1.81	1602	2.14	1683	2.48	1759	2.83
5000	1511	1.78	1595	2.09	1677	2.43	1755	2.79	1828	3.15
5315	1596	2.08	1675	2.41	1753	2.76	1828	3.13	1899	3.51
5625	1681	2.41	1756	2.74	1830	3.10	1902	3.49	1971	3.88
5940	1767	2.76	1838	3.10	1909	3.48	1978	3.87	2045	4.28
6250	1854	3.14	1921	3.49	1989	3.88	2055	4.27	2119	4.69

CFM	AVAILABLE EXTERNAL STATIC PRESSURE (in. wg)									
	1.2		1.4		1.6		1.8		2.0	
	rpm	bhp	rpm	bhp	rpm	bhp	rpm	bhp	rpm	bhp
3750	1634	2.29	1705	2.61	1772	2.93	1837	3.26	1898	3.60
4065	1698	2.57	1768	2.90	1834	3.23	1897	3.58	1957	3.93
4375	1763	2.86	1832	3.21	1897	3.56	1959	3.92	2018	4.29
4690	1830	3.18	1897	3.55	1961	3.92	2022	4.29	2081	4.68
5000	1898	3.53	1964	3.91	2027	4.30	2087	4.69	2144	5.09
5315	1967	3.90	2031	4.29	2093	4.69	2152	5.10	—	—
5625	2037	4.28	2100	4.69	2161	5.11	—	—	—	—
5940	2109	4.69	2170	5.11	—	—	—	—	—	—
6250	2181	5.11	—	—	—	—	—	—	—	—

Std/Med Static 1178-2200 rpm, 3.0 maximum bhp

High Static 1178-2200 rpm, 5.0 maximum bhp

50FE-M14 — Standard/Medium Static — 12.5 Ton Vertical Supply (rpm - vdc)

CFM	AVAILABLE EXTERNAL STATIC PRESSURE (in. wg)									
	0.2		0.4		0.6		0.8		1.0	
	rpm	vdc	rpm	vdc	rpm	vdc	rpm	vdc	rpm	vdc
3750	1178	5.3	1287	5.8	1386	6.2	1475	6.7	1558	7.0
4065	1260	5.7	1362	6.1	1456	6.6	1543	7.0	1623	7.3
4375	1343	6.0	1438	6.5	1528	6.9	1612	7.3	1690	7.6
4690	1426	6.4	1516	6.8	1602	7.2	1683	7.6	1759	8.0
5000	1511	6.8	1595	7.2	1677	7.6	1755	7.9	—	—
5315	1596	7.2	1675	7.6	1753	7.9	—	—	—	—
5625	1681	7.6	1756	8.0	—	—	—	—	—	—
5940	1767	8.0	—	—	—	—	—	—	—	—
6250	—	—	—	—	—	—	—	—	—	—

CFM	AVAILABLE EXTERNAL STATIC PRESSURE (in. wg)									
	1.2		1.4		1.6		1.8		2.0	
	rpm	vdc	rpm	vdc	rpm	vdc	rpm	vdc	rpm	vdc
3750	1634	7.4	1705	7.7	1772	8.0	—	—	—	—
4065	1698	7.7	1768	8.0	—	—	—	—	—	—
4375	1763	8.0	—	—	—	—	—	—	—	—
4690	—	—	—	—	—	—	—	—	—	—
5000	—	—	—	—	—	—	—	—	—	—
5315	—	—	—	—	—	—	—	—	—	—
5625	—	—	—	—	—	—	—	—	—	—
5940	—	—	—	—	—	—	—	—	—	—
6250	—	—	—	—	—	—	—	—	—	—

Std/Med Static 1178-2200 rpm

Fan data (cont)

50FE-M14 — High Static — 12.5 Ton Vertical Supply (rpm - vdc)

CFM	AVAILABLE EXTERNAL STATIC PRESSURE (in. wg)									
	0.2		0.4		0.6		0.8		1.0	
	rpm	vdc	rpm	vdc	rpm	vdc	rpm	vdc	rpm	vdc
3750	1178	5.3	1287	5.8	1386	6.2	1475	6.7	1558	7.0
4065	1260	5.7	1362	6.1	1456	6.6	1543	7.0	1623	7.3
4375	1343	6.0	1438	6.5	1528	6.9	1612	7.3	1690	7.6
4690	1426	6.4	1516	6.8	1602	7.2	1683	7.6	1759	8.0
5000	1511	6.8	1595	7.2	1677	7.6	1755	7.9	1828	8.3
5315	1596	7.2	1675	7.6	1753	7.9	1828	8.3	1899	8.6
5625	1681	7.6	1756	8.0	1830	8.3	1902	8.6	1971	8.9
5940	1767	8.0	1838	8.3	1909	8.7	1978	9.0	2045	9.3
6250	1854	8.4	1921	8.7	1989	9.0	2055	9.3	2119	9.6

CFM	AVAILABLE EXTERNAL STATIC PRESSURE (in. wg)									
	1.2		1.4		1.6		1.8		2.0	
	rpm	vdc	rpm	vdc	rpm	vdc	rpm	vdc	rpm	vdc
3750	1634	7.4	1705	7.7	1772	8.0	1837	8.3	1898	8.6
4065	1698	7.7	1768	8.0	1834	8.3	1897	8.6	1957	8.9
4375	1763	8.0	1832	8.3	1897	8.6	1959	8.9	2018	9.2
4690	1830	8.3	1897	8.6	1961	8.9	2022	9.2	2081	9.5
5000	1898	8.6	1964	8.9	2027	9.2	2087	9.5	2144	9.7
5315	1967	8.9	2031	9.2	2093	9.5	2152	9.8	—	—
5625	2037	9.2	2100	9.5	2161	9.8	—	—	—	—
5940	2109	9.6	2170	9.9	—	—	—	—	—	—
6250	2181	9.9	—	—	—	—	—	—	—	—

High Static 1178-2200 rpm

50FE-M16 — 15 Ton Vertical Supply (rpm - bhp)

CFM	AVAILABLE EXTERNAL STATIC PRESSURE (in. wg)									
	0.2		0.4		0.6		0.8		1.0	
	rpm	bhp	rpm	bhp	rpm	bhp	rpm	bhp	rpm	bhp
4500	1120	0.73	1201	0.90	1281	1.10	1361	1.32	1441	1.56
4875	1208	0.92	1283	1.10	1357	1.30	1431	1.52	1505	1.77
5250	1297	1.12	1367	1.32	1436	1.52	1504	1.75	1573	2.00
5625	1387	1.36	1452	1.56	1516	1.77	1581	2.01	1645	2.26
6000	1477	1.61	1538	1.82	1598	2.04	1659	2.28	1719	2.54
6375	1568	1.89	1625	2.10	1682	2.33	1739	2.58	1796	2.84
6750	1659	2.20	1713	2.42	1767	2.66	1821	2.91	1874	3.17
7125	1751	2.56	1802	2.79	1891	3.23	1904	3.29	1955	3.56
7500	1842	2.99	1891	3.23	1891	3.23	1988	3.75	2036	4.03

CFM	AVAILABLE EXTERNAL STATIC PRESSURE (in. wg)									
	1.2		1.4		1.6		1.8		2.0	
	rpm	bhp	rpm	bhp	rpm	bhp	rpm	bhp	rpm	bhp
4500	1520	1.83	1597	2.13	1673	2.45	1747	2.79	1818	3.14
4875	1579	2.05	1651	2.34	1723	2.66	1793	2.99	1861	3.35
5250	1642	2.28	1710	2.57	1777	2.89	1844	3.23	1909	3.58
5625	1709	2.54	1773	2.83	1836	3.14	1899	3.48	1961	3.83
6000	1779	2.81	1840	3.11	1899	3.42	1959	3.76	2018	4.11
6375	1853	3.12	1909	3.41	1966	3.73	2022	4.05	2078	4.40
6750	1928	3.45	1982	3.75	2035	4.06	2089	4.39	2142	4.73
7125	2006	3.84	2056	4.14	2107	4.46	2158	4.79	—	—
7500	2085	4.33	2133	4.64	2181	4.96	—	—	—	—

Std/Med Static 1120-2200 rpm, 3.0 maximum bhp

High Static 1120-2200 rpm, 5.0 maximum bhp

50FE-M16 — Standard/Medium Static — 15 Ton Vertical Supply (rpm - vdc)

CFM	AVAILABLE EXTERNAL STATIC PRESSURE (in. wg)									
	0.2		0.4		0.6		0.8		1.0	
	rpm	vdc	rpm	vdc	rpm	vdc	rpm	vdc	rpm	vdc
4500	1120	5.0	1201	5.4	1281	5.8	1361	6.1	1441	6.5
4875	1208	5.4	1283	5.8	1357	6.1	1431	6.5	1505	6.8
5250	1297	5.8	1367	6.2	1436	6.5	1504	6.8	1573	7.1
5625	1387	6.2	1452	6.5	1516	6.8	1581	7.1	1645	7.4
6000	1477	6.7	1538	6.9	1598	7.2	1659	7.5	1719	7.8
6375	1568	7.1	1625	7.3	1682	7.6	1739	7.9	1796	8.1
6750	1659	7.5	1713	7.8	1767	8.0	1821	8.3	—	—
7125	1751	7.9	1802	8.2	—	—	—	—	—	—
7500	1842	8.3	—	—	—	—	—	—	—	—

CFM	AVAILABLE EXTERNAL STATIC PRESSURE (in. wg)									
	1.2		1.4		1.6		1.8		2.0	
	rpm	vdc	rpm	vdc	rpm	vdc	rpm	vdc	rpm	vdc
4500	1520	6.9	1597	7.2	1673	7.6	1747	7.9	—	—
4875	1579	7.1	1651	7.5	1723	7.8	1793	8.1	—	—
5250	1642	7.4	1710	7.7	1777	8.0	—	—	—	—
5625	1709	7.7	1773	8.0	1836	8.3	—	—	—	—
6000	1779	8.1	1840	8.3	—	—	—	—	—	—
6375	—	—	—	—	—	—	—	—	—	—
6750	—	—	—	—	—	—	—	—	—	—
7125	—	—	—	—	—	—	—	—	—	—
7500	—	—	—	—	—	—	—	—	—	—

Std/Med Static 1120-2200 rpm

50FE-M16 — High Static — 15 Ton Vertical Supply (rpm - vdc)

CFM	AVAILABLE EXTERNAL STATIC PRESSURE (in. wg)									
	0.2		0.4		0.6		0.8		1.0	
	rpm	vdc	rpm	vdc	rpm	vdc	rpm	vdc	rpm	vdc
4500	1120	5.0	1201	5.4	1281	5.8	1361	6.1	1441	6.5
4875	1208	5.4	1283	5.8	1357	6.1	1431	6.5	1505	6.8
5250	1297	5.8	1367	6.2	1436	6.5	1504	6.8	1573	7.1
5625	1387	6.2	1452	6.5	1516	6.8	1581	7.1	1645	7.4
6000	1477	6.7	1538	6.9	1598	7.2	1659	7.5	1719	7.8
6375	1568	7.1	1625	7.3	1682	7.6	1739	7.9	1796	8.1
6750	1659	7.5	1713	7.8	1767	8.0	1821	8.3	1874	8.5
7125	1751	7.9	1802	8.2	1853	8.4	1904	8.6	1955	8.9
7500	1842	8.3	1891	8.6	1940	8.8	1988	9.0	2036	9.2

CFM	AVAILABLE EXTERNAL STATIC PRESSURE (in. wg)									
	1.2		1.4		1.6		1.8		2.0	
	rpm	vdc	rpm	vdc	rpm	vdc	rpm	vdc	rpm	vdc
4500	1520	6.9	1597	7.2	1673	7.6	1747	7.9	1818	8.2
4875	1579	7.1	1651	7.5	1723	7.8	1793	8.1	1861	8.4
5250	1642	7.4	1710	7.7	1777	8.0	1844	8.4	1909	8.7
5625	1709	7.7	1773	8.0	1836	8.3	1899	8.6	1961	8.9
6000	1779	8.1	1840	8.3	1899	8.6	1959	8.9	2018	9.2
6375	1853	8.4	1909	8.7	1966	8.9	2022	9.2	2078	9.4
6750	1928	8.7	1982	9.0	2035	9.2	2089	9.5	2142	9.7
7125	2006	9.1	2056	9.3	2107	9.6	2158	9.8	—	—
7500	2085	9.5	2133	9.7	2181	9.9	—	—	—	—

High Static 1120-2200 rpm

50FE-M08 — 7.5 Ton Horizontal Supply (rpm - bhp)

CFM	AVAILABLE EXTERNAL STATIC PRESSURE (in. wg)									
	0.2		0.4		0.6		0.8		1.0	
	rpm	bhp	rpm	bhp	rpm	bhp	rpm	bhp	rpm	bhp
2250	910	0.28	1046	0.43	1167	0.60	1276	0.78	1376	0.98
2440	966	0.34	1095	0.49	1211	0.67	1316	0.86	1414	1.06
2625	1023	0.40	1145	0.56	1256	0.74	1359	0.94	1453	1.15
2815	1081	0.47	1197	0.64	1304	0.82	1403	1.02	1495	1.24
3000	1141	0.54	1251	0.72	1353	0.91	1449	1.12	1538	1.33
3190	1200	0.63	1306	0.81	1404	1.00	1496	1.21	1583	1.44
3375	1261	0.71	1361	0.90	1456	1.10	1545	1.31	1629	1.54
3565	1322	0.81	1418	1.00	1509	1.20	1595	1.42	1677	1.65
3750	1384	0.91	1476	1.10	1563	1.30	1646	1.52	1725	1.75

CFM	AVAILABLE EXTERNAL STATIC PRESSURE (in. wg)									
	1.2		1.4		1.6		1.8		2.0	
	rpm	bhp	rpm	bhp	rpm	bhp	rpm	bhp	rpm	bhp
2250	1469	1.19	1556	1.42	1639	1.66	1716	1.90	1790	2.16
2440	1505	1.28	1590	1.51	1671	1.75	1748	2.01	1821	2.27
2625	1542	1.37	1626	1.61	1705	1.85	1781	2.11	1853	2.38
2815	1581	1.46	1663	1.70	1741	1.96	1816	2.22	1887	2.49
3000	1622	1.57	1702	1.81	1778	2.06	1852	2.33	1922	2.60
3190	1665	1.67	1743	1.92	1818	2.18	1889	2.44	1958	2.72
3375	1709	1.78	1785	2.03	1858	2.29	1928	2.55	1996	2.83
3565	1755	1.89	1829	2.14	1900	2.40	1969	2.67	2035	2.95
3750	1801	2.00	1874	2.25	1944	2.51	2011	2.78	2076	3.06

Std/Med Static 910-2000 rpm, 2.4 maximum bhp

High Static 910-2200 rpm, 3.0 maximum bhp

50FE-M08 — Standard/Medium Static — 7.5 Ton Horizontal Supply (rpm - vdc)

CFM	AVAILABLE EXTERNAL STATIC PRESSURE (in. wg)									
	0.2		0.4		0.6		0.8		1.0	
	rpm	vdc	rpm	vdc	rpm	vdc	rpm	vdc	rpm	vdc
2250	910	4.4	1046	5.1	1167	5.7	1276	6.3	1376	6.8
2440	966	4.7	1095	5.3	1211	5.9	1316	6.5	1414	7.0
2625	1023	5.0	1145	5.6	1256	6.2	1359	6.7	1453	7.2
2815	1081	5.3	1197	5.9	1304	6.4	1403	6.9	1495	7.4
3000	1141	5.6	1251	6.1	1353	6.7	1449	7.2	1538	7.6
3190	1200	5.9	1306	6.4	1404	6.9	1496	7.4	1583	7.9
3375	1261	6.2	1361	6.7	1456	7.2	1545	7.7	1629	8.1
3565	1322	6.5	1418	7.0	1509	7.5	1595	7.9	1677	8.3
3750	1384	6.8	1476	7.3	1563	7.8	1646	8.2	1725	8.6

CFM	AVAILABLE EXTERNAL STATIC PRESSURE (in. wg)									
	1.2		1.4		1.6		1.8		2.0	
	rpm	vdc	rpm	vdc	rpm	vdc	rpm	vdc	rpm	vdc
2250	1469	7.3	1556	7.7	1639	8.1	1716	8.5	1790	8.9
2440	1505	7.5	1590	7.9	1671	8.3	1748	8.7	1821	9.1
2625	1542	7.6	1626	8.1	1705	8.5	1781	8.9	1853	9.2
2815	1581	7.8	1663	8.3	1741	8.7	1816	9.1	—	—
3000	1622	8.1	1702	8.5	1778	8.9	1852	9.2	—	—
3190	1665	8.3	1743	8.7	1818	9.1	—	—	—	—
3375	1709	8.5	1785	8.9	1858	9.3	—	—	—	—
3565	1755	8.7	1829	9.1	—	—	—	—	—	—
3750	1801	9.0	1874	9.4	—	—	—	—	—	—

Std/Med Static 910-2000 rpm

50FE-M08 — High Static — 7.5 Ton Horizontal Supply (rpm - vdc)

CFM	AVAILABLE EXTERNAL STATIC PRESSURE (in. wg)									
	0.2		0.4		0.6		0.8		1.0	
	rpm	vdc	rpm	vdc	rpm	vdc	rpm	vdc	rpm	vdc
2250	910	4.0	1046	4.7	1167	5.2	1276	5.7	1376	6.2
2440	966	4.3	1095	4.9	1211	5.4	1316	5.9	1414	6.4
2625	1023	4.6	1145	5.1	1256	5.6	1359	6.1	1453	6.6
2815	1081	4.8	1197	5.4	1304	5.9	1403	6.3	1495	6.7
3000	1141	5.1	1251	5.6	1353	6.1	1449	6.5	1538	6.9
3190	1200	5.4	1306	5.9	1404	6.3	1496	6.8	1583	7.2
3375	1261	5.7	1361	6.1	1456	6.6	1545	7.0	1629	7.4
3565	1322	5.9	1418	6.4	1509	6.8	1595	7.2	1677	7.6
3750	1384	6.2	1476	6.7	1563	7.1	1646	7.4	1725	7.8

CFM	AVAILABLE EXTERNAL STATIC PRESSURE (in. wg)									
	1.2		1.4		1.6		1.8		2.0	
	rpm	vdc	rpm	vdc	rpm	vdc	rpm	vdc	rpm	vdc
2250	1469	6.6	1556	7.0	1639	7.4	1716	7.8	1790	8.1
2440	1505	6.8	1590	7.2	1671	7.6	1748	7.9	1821	8.3
2625	1542	7.0	1626	7.4	1705	7.7	1781	8.1	1853	8.4
2815	1581	7.1	1663	7.5	1741	7.9	1816	8.2	1887	8.6
3000	1622	7.3	1702	7.7	1778	8.1	1852	8.4	1922	8.7
3190	1665	7.5	1743	7.9	1818	8.2	1889	8.6	1958	8.9
3375	1709	7.7	1785	8.1	1858	8.4	1928	8.7	1996	9.1
3565	1755	7.9	1829	8.3	1900	8.6	1969	8.9	2035	9.2
3750	1801	8.2	1874	8.5	1944	8.8	2011	9.1	2076	9.4

High Static 910-2200 rpm

Fan data (cont)

50FE-M09 — 8.5 Ton Horizontal Supply (rpm - bhp)

CFM	AVAILABLE EXTERNAL STATIC PRESSURE (in. wg)									
	0.2		0.4		0.6		0.8		1.0	
	rpm	bhp	rpm	bhp	rpm	bhp	rpm	bhp	rpm	bhp
2550	947	0.31	1065	0.45	1178	0.60	1284	0.78	1382	0.97
2765	1010	0.38	1120	0.51	1226	0.67	1327	0.85	1422	1.05
2975	1074	0.45	1177	0.59	1277	0.75	1373	0.94	1464	1.13
3190	1139	0.53	1235	0.67	1329	0.84	1421	1.02	1508	1.22
3400	1205	0.62	1296	0.77	1384	0.93	1471	1.12	1555	1.32
3615	1272	0.71	1357	0.86	1441	1.03	1524	1.22	1604	1.43
3825	1340	0.81	1420	0.97	1499	1.14	1578	1.33	1655	1.53
4040	1407	0.92	1484	1.08	1559	1.25	1634	1.44	1707	1.64
4250	1476	1.03	1548	1.19	1620	1.36	1691	1.55	1762	1.75

CFM	AVAILABLE EXTERNAL STATIC PRESSURE (in. wg)									
	1.2		1.4		1.6		1.8		2.0	
	rpm	bhp	rpm	bhp	rpm	bhp	rpm	bhp	rpm	bhp
2550	1473	1.18	1558	1.39	1638	1.62	1713	1.85	1785	2.10
2765	1511	1.26	1595	1.48	1674	1.71	1748	1.95	1819	2.20
2975	1551	1.35	1633	1.57	1710	1.81	1784	2.05	1855	2.31
3190	1592	1.44	1672	1.67	1749	1.91	1822	2.16	1891	2.41
3400	1636	1.54	1714	1.77	1789	2.01	1860	2.26	1929	2.52
3615	1682	1.64	1757	1.87	1830	2.12	1900	2.37	1968	2.63
3825	1730	1.75	1803	1.98	1873	2.22	1942	2.48	2008	2.74
4040	1779	1.86	1850	2.09	1918	2.33	1985	2.58	2050	2.84
4250	1831	1.97	1899	2.19	1965	2.43	2030	2.68	2093	2.94

Std/Med Static 947-2000 rpm, 2.4 maximum bhp

High Static 947-2200 rpm, 3.0 maximum bhp

50FE-M09 — Standard/Medium Static — 8.5 Ton Horizontal Supply (rpm - vdc)

CFM	AVAILABLE EXTERNAL STATIC PRESSURE (in. wg)									
	0.2		0.4		0.6		0.8		1.0	
	rpm	vdc	rpm	vdc	rpm	vdc	rpm	vdc	rpm	vdc
2550	947	4.6	1065	5.2	1178	5.8	1284	6.3	1382	6.8
2765	1010	4.9	1120	5.5	1226	6.0	1327	6.5	1422	7.0
2975	1074	5.2	1177	5.8	1277	6.3	1373	6.8	1464	7.2
3190	1139	5.6	1235	6.1	1329	6.5	1421	7.0	1508	7.5
3400	1205	5.9	1296	6.4	1384	6.8	1471	7.3	1555	7.7
3615	1272	6.3	1357	6.7	1441	7.1	1524	7.6	1604	8.0
3825	1340	6.6	1420	7.0	1499	7.4	1578	7.8	1655	8.2
4040	1407	7.0	1484	7.3	1559	7.7	1634	8.1	1707	8.5
4250	1476	7.3	1548	7.7	1620	8.0	1691	8.4	1762	8.8

CFM	AVAILABLE EXTERNAL STATIC PRESSURE (in. wg)									
	1.2		1.4		1.6		1.8		2.0	
	rpm	vdc	rpm	vdc	rpm	vdc	rpm	vdc	rpm	vdc
2550	1473	7.3	1558	7.7	1638	8.1	1713	8.5	1785	8.9
2765	1511	7.5	1595	7.9	1674	8.3	1748	8.7	1819	9.1
2975	1551	7.7	1633	8.1	1710	8.5	1784	8.9	1855	9.3
3190	1592	7.9	1672	8.3	1749	8.7	1822	9.1	—	—
3400	1636	8.1	1714	8.5	1789	8.9	1860	9.3	—	—
3615	1682	8.4	1757	8.8	1830	9.1	1900	9.5	—	—
3825	1730	8.6	1803	9.0	1873	9.3	—	—	—	—
4040	1779	8.9	1850	9.2	1918	9.6	—	—	—	—
4250	1831	9.1	1899	9.5	—	—	—	—	—	—

Std/Med Static 947-2000 rpm

50FE-M09 — High Static — 8.5 Ton Horizontal Supply (rpm - vdc)

CFM	AVAILABLE EXTERNAL STATIC PRESSURE (in. wg)									
	0.2		0.4		0.6		0.8		1.0	
	rpm	vdc	rpm	vdc	rpm	vdc	rpm	vdc	rpm	vdc
2550	947	4.2	1065	4.8	1178	5.3	1284	5.8	1382	6.2
2765	1010	4.5	1120	5.0	1226	5.5	1327	6.0	1422	6.4
2975	1074	4.8	1177	5.3	1277	5.7	1373	6.2	1464	6.6
3190	1139	5.1	1235	5.5	1329	6.0	1421	6.4	1508	6.8
3400	1205	5.4	1296	5.8	1384	6.2	1471	6.6	1555	7.0
3615	1272	5.7	1357	6.1	1441	6.5	1524	6.9	1604	7.2
3825	1340	6.0	1420	6.4	1499	6.8	1578	7.1	1655	7.5
4040	1407	6.3	1484	6.7	1559	7.0	1634	7.4	1707	7.7
4250	1476	6.7	1548	7.0	1620	7.3	1691	7.7	1762	8.0

CFM	AVAILABLE EXTERNAL STATIC PRESSURE (in. wg)									
	1.2		1.4		1.6		1.8		2.0	
	rpm	vdc	rpm	vdc	rpm	vdc	rpm	vdc	rpm	vdc
2550	1473	6.6	1558	7.0	1638	7.4	1713	7.8	1785	8.1
2765	1511	6.8	1595	7.2	1674	7.6	1748	7.9	1819	8.2
2975	1551	7.0	1633	7.4	1710	7.7	1784	8.1	1855	8.4
3190	1592	7.2	1672	7.6	1749	7.9	1822	8.3	1891	8.6
3400	1636	7.4	1714	7.8	1789	8.1	1860	8.4	1929	8.7
3615	1682	7.6	1757	8.0	1830	8.3	1900	8.6	1968	8.9
3825	1730	7.8	1803	8.2	1873	8.5	1942	8.8	2008	9.1
4040	1779	8.1	1850	8.4	1918	8.7	1985	9.0	2050	9.3
4250	1831	8.3	1899	8.6	1965	8.9	2030	9.2	2093	9.5

High Static 947-2200 rpm

50FE-M12 — 10 Ton Horizontal Supply (rpm - bhp)

CFM	AVAILABLE EXTERNAL STATIC PRESSURE (in. wg)									
	0.2		0.4		0.6		0.8		1.0	
	rpm	bhp	rpm	bhp	rpm	bhp	rpm	bhp	rpm	bhp
3000	1100	0.49	1202	0.64	1301	0.81	1396	1.00	1487	1.21
3250	1176	0.59	1270	0.74	1363	0.92	1453	1.11	1539	1.32
3500	1252	0.70	1341	0.86	1428	1.04	1512	1.24	1595	1.45
3750	1330	0.83	1413	1.00	1495	1.18	1575	1.38	1653	1.60
4000	1409	0.97	1487	1.14	1563	1.33	1639	1.53	1714	1.75
4250	1488	1.12	1561	1.29	1634	1.48	1706	1.69	1776	1.90
4500	1568	1.28	1637	1.45	1706	1.65	1774	1.85	1841	2.07
4750	1648	1.44	1714	1.62	1779	1.81	1844	2.02	1908	2.23
5000	1728	1.61	1791	1.79	1853	1.98	1915	2.19	1976	2.40

CFM	AVAILABLE EXTERNAL STATIC PRESSURE (in. wg)									
	1.2		1.4		1.6		1.8		2.0	
	rpm	bhp	rpm	bhp	rpm	bhp	rpm	bhp	rpm	bhp
3000	1573	1.43	1654	1.66	1732	1.91	1805	2.16	1875	2.42
3250	1622	1.55	1702	1.79	1777	2.04	1849	2.29	1919	2.57
3500	1674	1.68	1751	1.92	1825	2.18	1895	2.44	1964	2.72
3750	1729	1.83	1803	2.07	1874	2.33	1943	2.59	2010	2.87
4000	1786	1.98	1857	2.22	1926	2.48	1993	2.75	2058	3.03
4250	1846	2.14	1914	2.38	1980	2.64	2045	2.91	2108	3.18
4500	1908	2.30	1973	2.54	2036	2.80	2099	3.06	2160	3.34
4750	1971	2.46	2034	2.71	2095	2.96	2155	3.22	—	—
5000	2036	2.63	2096	2.87	2155	3.11	—	—	—	—

Std/Med Static 1100-2000 rpm, 2.4 maximum bhp

High Static 1100-2200 rpm, 5.0 maximum bhp

50FE-M12 — Standard/Medium Static — 10 Ton Horizontal Supply (rpm - vdc)

CFM	AVAILABLE EXTERNAL STATIC PRESSURE (in. wg)									
	0.2		0.4		0.6		0.8		1.0	
	rpm	vdc	rpm	vdc	rpm	vdc	rpm	vdc	rpm	vdc
3000	1100	5.4	1202	5.9	1301	6.4	1396	6.9	1487	7.4
3250	1176	5.8	1270	6.2	1363	6.7	1453	7.2	1539	7.6
3500	1252	6.2	1341	6.6	1428	7.1	1512	7.5	1595	7.9
3750	1330	6.6	1413	7.0	1495	7.4	1575	7.8	1653	8.2
4000	1409	7.0	1487	7.4	1563	7.8	1639	8.1	1714	8.5
4250	1488	7.4	1561	7.7	1634	8.1	1706	8.5	1776	8.8
4500	1568	7.8	1637	8.1	1706	8.5	1774	8.8	1841	9.2
4750	1648	8.2	1714	8.5	1779	8.9	1844	9.2	1908	9.5
5000	1728	8.6	1791	8.9	1853	9.2	1915	9.6	1976	9.9

CFM	AVAILABLE EXTERNAL STATIC PRESSURE (in. wg)									
	1.2		1.4		1.6		1.8		2.0	
	rpm	vdc	rpm	vdc	rpm	vdc	rpm	vdc	rpm	vdc
3000	1573	7.8	1654	8.2	1732	8.6	1805	9.0	1875	9.4
3250	1622	8.1	1702	8.5	1777	8.9	1849	9.2	—	—
3500	1674	8.3	1751	8.7	1825	9.1	—	—	—	—
3750	1729	8.6	1803	9.0	1874	9.4	—	—	—	—
4000	1786	8.9	1857	9.3	—	—	—	—	—	—
4250	1846	9.2	1914	9.6	—	—	—	—	—	—
4500	1908	9.5	—	—	—	—	—	—	—	—
4750	—	—	—	—	—	—	—	—	—	—
5000	—	—	—	—	—	—	—	—	—	—

Std/Med Static 1100-2200 rpm

50FE-M12 — High Static — 10 Ton Horizontal Supply (rpm - vdc)

CFM	AVAILABLE EXTERNAL STATIC PRESSURE (in. wg)									
	0.2		0.4		0.6		0.8		1.0	
	rpm	vdc	rpm	vdc	rpm	vdc	rpm	vdc	rpm	vdc
3000	1100	4.9	1202	5.4	1301	5.9	1396	6.3	1487	6.7
3250	1176	5.3	1270	5.7	1363	6.1	1453	6.6	1539	6.9
3500	1252	5.6	1341	6.0	1428	6.4	1512	6.8	1595	7.2
3750	1330	6.0	1413	6.4	1495	6.7	1575	7.1	1653	7.5
4000	1409	6.3	1487	6.7	1563	7.1	1639	7.4	1714	7.8
4250	1488	6.7	1561	7.1	1634	7.4	1706	7.7	1776	8.0
4500	1568	7.1	1637	7.4	1706	7.7	1774	8.0	1841	8.3
4750	1648	7.5	1714	7.8	1779	8.1	1844	8.4	1908	8.7
5000	1728	7.8	1791	8.1	1853	8.4	1915	8.7	1976	9.0

CFM	AVAILABLE EXTERNAL STATIC PRESSURE (in. wg)									
	1.2		1.4		1.6		1.8		2.0	
	rpm	vdc	rpm	vdc	rpm	vdc	rpm	vdc	rpm	vdc
3000	1573	7.1	1654	7.5	1732	7.8	1805	8.2	1875	8.5
3250	1622	7.3	1702	7.7	1777	8.0	1849	8.4	1919	8.7
3500	1674	7.6	1751	7.9	1825	8.3	1895	8.6	1964	8.9
3750	1729	7.8	1803	8.2	1874	8.5	1943	8.8	2010	9.1
4000	1786	8.1	1857	8.4	1926	8.7	1993	9.0	2058	9.3
4250	1846	8.4	1914	8.7	1980	9.0	2045	9.3	2108	9.6
4500	1908	8.7	1973	9.0	2036	9.2	2099	9.5	2160	9.8
4750	1971	8.9	2034	9.2	2095	9.5	2155	9.8	—	—
5000	2036	9.2	2096	9.5	2155	9.8	—	—	—	—

High Static 1100-2200 rpm

Fan data (cont)

50FE-M14 — 12.5 Ton Horizontal Supply (rpm - bhp)

CFM	AVAILABLE EXTERNAL STATIC PRESSURE (in. wg)									
	0.2		0.4		0.6		0.8		1.0	
	rpm	bhp	rpm	bhp	rpm	bhp	rpm	bhp	rpm	bhp
3750	1072	0.65	1166	0.83	1266	1.07	1363	1.33	1454	1.62
4065	1148	0.79	1233	0.98	1324	1.22	1416	1.49	1504	1.78
4375	1226	0.96	1303	1.15	1386	1.39	1472	1.66	1556	1.97
4690	1304	1.15	1374	1.35	1451	1.59	1530	1.86	1610	2.17
5000	1383	1.37	1448	1.57	1518	1.81	1592	2.08	1667	2.39
5315	1463	1.60	1523	1.81	1588	2.05	1656	2.33	1726	2.63
5625	1543	1.86	1599	2.07	1659	2.31	1723	2.59	1789	2.90
5940	1623	2.14	1675	2.35	1732	2.60	1791	2.87	1853	3.18
6250	1704	2.44	1753	2.65	1806	2.90	1861	3.17	1919	3.48

CFM	AVAILABLE EXTERNAL STATIC PRESSURE (in. wg)									
	1.2		1.4		1.6		1.8		2.0	
	rpm	bhp	rpm	bhp	rpm	bhp	rpm	bhp	rpm	bhp
3750	1540	1.92	1620	2.24	1694	2.56	1765	2.89	1833	3.24
4065	1587	2.09	1666	2.42	1740	2.76	1810	3.11	1877	3.46
4375	1637	2.29	1713	2.62	1786	2.97	1856	3.34	1922	3.71
4690	1688	2.50	1763	2.85	1834	3.20	1902	3.57	1968	3.96
5000	1741	2.72	1813	3.08	1883	3.45	1950	3.83	2015	4.22
5315	1797	2.97	1867	3.33	1934	3.70	2000	4.10	2063	4.50
5625	1855	3.23	1922	3.60	1987	3.97	2050	4.36	2112	4.77
5940	1915	3.51	1979	3.88	2042	4.26	2103	4.65	2163	5.06
6250	1978	3.81	2038	4.17	2098	4.55	2158	4.95	—	—

Std/Med Static 1072-2200 rpm, 3.0 maximum bhp

High Static 1072-2200 rpm, 5.0 maximum bhp

50FE-M14 — Standard/Medium Static — 12.5 Ton Horizontal Supply (rpm - vdc)

CFM	AVAILABLE EXTERNAL STATIC PRESSURE (in. wg)									
	0.2		0.4		0.6		0.8		1.0	
	rpm	vdc	rpm	vdc	rpm	vdc	rpm	vdc	rpm	vdc
3750	1072	4.8	1166	5.2	1266	5.7	1363	6.1	1454	6.6
4065	1148	5.1	1233	5.5	1324	6.0	1416	6.4	1504	6.8
4375	1226	5.5	1303	5.9	1386	6.2	1472	6.6	1556	7.0
4690	1304	5.9	1374	6.2	1451	6.5	1530	6.9	1610	7.3
5000	1383	6.2	1448	6.5	1518	6.9	1592	7.2	1667	7.5
5315	1463	6.6	1523	6.9	1588	7.2	1656	7.5	1726	7.8
5625	1543	7.0	1599	7.2	1659	7.5	1723	7.8	1789	8.1
5940	1623	7.3	1675	7.6	1732	7.8	1791	8.1	—	—
6250	1704	7.7	1753	7.9	1806	8.2	—	—	—	—

CFM	AVAILABLE EXTERNAL STATIC PRESSURE (in. wg)									
	1.2		1.4		1.6		1.8		2.0	
	rpm	vdc	rpm	vdc	rpm	vdc	rpm	vdc	rpm	vdc
3750	1540	7.0	1620	7.3	1694	7.7	1765	8.0	—	—
4065	1587	7.2	1666	7.5	1740	7.9	—	—	—	—
4375	1637	7.4	1713	7.8	1786	8.1	—	—	—	—
4690	1688	7.6	1763	8.0	—	—	—	—	—	—
5000	1741	7.9	—	—	—	—	—	—	—	—
5315	1797	8.1	—	—	—	—	—	—	—	—
5625	—	—	—	—	—	—	—	—	—	—
5940	—	—	—	—	—	—	—	—	—	—
6250	—	—	—	—	—	—	—	—	—	—

Std/Med Static 1072-2200 rpm

50FE-M14 — High Static — 12.5 Ton Horizontal Supply (rpm - vdc)

CFM	AVAILABLE EXTERNAL STATIC PRESSURE (in. wg)									
	0.2		0.4		0.6		0.8		1.0	
	rpm	vdc	rpm	vdc	rpm	vdc	rpm	vdc	rpm	vdc
3750	1072	4.8	1166	5.2	1266	5.7	1363	6.1	1454	6.6
4065	1148	5.1	1233	5.5	1324	6.0	1416	6.4	1504	6.8
4375	1226	5.5	1303	5.9	1386	6.2	1472	6.6	1556	7.0
4690	1304	5.9	1374	6.2	1451	6.5	1530	6.9	1610	7.3
5000	1383	6.2	1448	6.5	1518	6.9	1592	7.2	1667	7.5
5315	1463	6.6	1523	6.9	1588	7.2	1656	7.5	1726	7.8
5625	1543	7.0	1599	7.2	1659	7.5	1723	7.8	1789	8.1
5940	1623	7.3	1675	7.6	1732	7.8	1791	8.1	1853	8.4
6250	1704	7.7	1753	7.9	1806	8.2	1861	8.4	1919	8.7

CFM	AVAILABLE EXTERNAL STATIC PRESSURE (in. wg)									
	1.2		1.4		1.6		1.8		2.0	
	rpm	vdc	rpm	vdc	rpm	vdc	rpm	vdc	rpm	vdc
3750	1540	7.0	1620	7.3	1694	7.7	1765	8.0	1833	8.3
4065	1587	7.2	1666	7.5	1740	7.9	1810	8.2	1877	8.5
4375	1637	7.4	1713	7.8	1786	8.1	1856	8.4	1922	8.7
4690	1688	7.6	1763	8.0	1834	8.3	1902	8.6	1968	8.9
5000	1741	7.9	1813	8.2	1883	8.5	1950	8.8	2015	9.1
5315	1797	8.1	1867	8.5	1934	8.8	2000	9.1	2063	9.4
5625	1855	8.4	1922	8.7	1987	9.0	2050	9.3	2112	9.6
5940	1915	8.7	1979	9.0	2042	9.3	2103	9.6	2163	9.8
6250	1978	9.0	2038	9.3	2098	9.5	2158	9.8	—	—

High Static 1072-2200 rpm

50FE-M16 — 15 Ton Horizontal Supply (rpm - bhp)

CFM	AVAILABLE EXTERNAL STATIC PRESSURE (in. wg)									
	0.2		0.4		0.6		0.8		1.0	
	rpm	bhp	rpm	bhp	rpm	bhp	rpm	bhp	rpm	bhp
4500	1117	0.73	1198	0.90	1278	1.09	1358	1.31	1438	1.55
4875	1205	0.91	1279	1.09	1353	1.29	1427	1.51	1501	1.76
5250	1294	1.12	1363	1.30	1432	1.51	1500	1.74	1569	1.99
5625	1383	1.34	1448	1.54	1512	1.76	1576	1.99	1640	2.24
6000	1473	1.60	1534	1.80	1594	2.02	1654	2.26	1714	2.52
6375	1564	1.88	1621	2.09	1678	2.32	1734	2.56	1791	2.82
6750	1655	2.18	1709	2.40	1762	2.63	1816	2.88	1869	3.14
7125	1746	2.54	1797	2.76	1848	3.01	1899	3.26	1949	3.53
7500	1838	2.97	1886	3.21	1935	3.46	1983	3.73	2031	4.00

CFM	AVAILABLE EXTERNAL STATIC PRESSURE (in. wg)									
	1.2		1.4		1.6		1.8		2.0	
	rpm	bhp	rpm	bhp	rpm	bhp	rpm	bhp	rpm	bhp
4500	1516	1.82	1594	2.12	1670	2.43	1744	2.77	1816	3.13
4875	1575	2.03	1647	2.32	1719	2.64	1790	2.98	1858	3.33
5250	1638	2.26	1706	2.56	1773	2.87	1840	3.21	1905	3.56
5625	1704	2.51	1768	2.81	1832	3.12	1895	3.46	1957	3.81
6000	1775	2.79	1835	3.09	1894	3.39	1954	3.73	2013	4.08
6375	1848	3.09	1904	3.38	1961	3.70	2017	4.02	2073	4.37
6750	1923	3.43	1976	3.72	2030	4.03	2083	4.35	2136	4.69
7125	2000	3.81	2051	4.11	2101	4.42	2152	4.75	—	—
7500	2079	4.29	2127	4.60	2175	4.92	—	—	—	—

Std/Med Static 1117-2200 rpm, 3.0 maximum bhp

High Static 1117-2200 rpm, 5.0 maximum bhp

50FE-M16 — Standard/Medium Static — 15 Ton Horizontal Supply (rpm - vdc)

CFM	AVAILABLE EXTERNAL STATIC PRESSURE (in. wg)									
	0.2		0.4		0.6		0.8		1.0	
	rpm	vdc	rpm	vdc	rpm	vdc	rpm	vdc	rpm	vdc
4500	1117	5.0	1198	5.4	1278	5.7	1358	6.1	1438	6.5
4875	1205	5.4	1279	5.7	1353	6.1	1427	6.4	1501	6.8
5250	1294	5.8	1363	6.1	1432	6.5	1500	6.8	1569	7.1
5625	1383	6.2	1448	6.5	1512	6.8	1576	7.1	1640	7.4
6000	1473	6.6	1534	6.9	1594	7.2	1654	7.5	1714	7.8
6375	1564	7.1	1621	7.3	1678	7.6	1734	7.8	1791	8.1
6750	1655	7.5	1709	7.7	1762	8.0	1816	8.2	1869	8.5
7125	1746	7.9	1797	8.1	1848	8.4	—	—	—	—
7500	1838	8.3	—	—	—	—	—	—	—	—

CFM	AVAILABLE EXTERNAL STATIC PRESSURE (in. wg)									
	1.2		1.4		1.6		1.8		2.0	
	rpm	vdc	rpm	vdc	rpm	vdc	rpm	vdc	rpm	vdc
4500	1516	6.8	1594	7.2	1670	7.6	1744	7.9	—	—
4875	1575	7.1	1647	7.4	1719	7.8	1790	8.1	—	—
5250	1638	7.4	1706	7.7	1773	8.0	—	—	—	—
5625	1704	7.7	1768	8.0	—	—	—	—	—	—
6000	1775	8.0	—	—	—	—	—	—	—	—
6375	—	—	—	—	—	—	—	—	—	—
6750	—	—	—	—	—	—	—	—	—	—
7125	—	—	—	—	—	—	—	—	—	—
7500	—	—	—	—	—	—	—	—	—	—

Std/Med Static 1117-2200 rpm

50FE-M16 — High Static — 15 Ton Horizontal Supply (rpm - vdc)

CFM	AVAILABLE EXTERNAL STATIC PRESSURE (in. wg)									
	0.2		0.4		0.6		0.8		1.0	
	rpm	vdc	rpm	vdc	rpm	vdc	rpm	vdc	rpm	vdc
4500	1117	5.0	1198	5.4	1278	5.7	1358	6.1	1438	6.5
4875	1205	5.4	1279	5.7	1353	6.1	1427	6.4	1501	6.8
5250	1294	5.8	1363	6.1	1432	6.5	1500	6.8	1569	7.1
5625	1383	6.2	1448	6.5	1512	6.8	1576	7.1	1640	7.4
6000	1473	6.6	1534	6.9	1594	7.2	1654	7.5	1714	7.8
6375	1564	7.1	1621	7.3	1678	7.6	1734	7.8	1791	8.1
6750	1655	7.5	1709	7.7	1762	8.0	1816	8.2	1869	8.5
7125	1746	7.9	1797	8.1	1848	8.4	1899	8.6	1949	8.8
7500	1838	8.3	1886	8.6	1935	8.8	1983	9.0	2031	9.2

CFM	AVAILABLE EXTERNAL STATIC PRESSURE (in. wg)									
	1.2		1.4		1.6		1.8		2.0	
	rpm	vdc	rpm	vdc	rpm	vdc	rpm	vdc	rpm	vdc
4500	1516	6.8	1594	7.2	1670	7.6	1744	7.9	1816	8.2
4875	1575	7.1	1647	7.4	1719	7.8	1790	8.1	1858	8.4
5250	1638	7.4	1706	7.7	1773	8.0	1840	8.3	1905	8.6
5625	1704	7.7	1768	8.0	1832	8.3	1895	8.6	1957	8.9
6000	1775	8.0	1835	8.3	1894	8.6	1954	8.9	2013	9.1
6375	1848	8.4	1904	8.6	1961	8.9	2017	9.2	2073	9.4
6750	1923	8.7	1976	9.0	2030	9.2	2083	9.5	2136	9.7
7125	2000	9.1	2051	9.3	2101	9.5	2152	9.8	—	—
7500	2079	9.4	2127	9.7	2175	9.9	—	—	—	—

High Static 1117-2200 rpm

Legend and Notes

Applicable for Electrical Data Tables on pages 104-131

LEGEND

BRKR	— Circuit Breaker
C.O.	— Convenience Outlet
FLA	— Full Load Amps
IFM	— Indoor Fan Motor
LRA	— Locked Rotor Amps
MCA	— Minimum Circuit Amps
P.E.	— Power Exhaust
PWRD C.O.	— Powered Convenience Outlet
RLA	— Rated Load Amps
SCCR	— Short Circuit Current Rating
UNPWR C.O.	— Unpowered Convenience Outlet

NOTES:

1. In compliance with NEC requirements for multi-motor and combination load equipment (refer to NEC Articles 430 and 440), the overcurrent protective device for the unit shall be fuse or HACR breaker. Canadian units may be fuse or circuit breaker.
2. For 208/230 v units, where one value is show it is the same for either 208 or 230 volts.
3. **Unbalanced 3-Phase Supply Voltage**: Never operate a motor where a phase imbalance in supply voltage is greater than 2%. Use the following formula to determine the percentage of voltage imbalance.

$$\text{\% Voltage Imbalance} = 100 \times \frac{\text{max voltage deviation from average voltage}}{\text{average voltage}}$$

Example: Supply voltage is 230-3-60

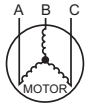

AB = 224-v
BC = 231-v
AC = 226-v

$$\text{Average Voltage} = \frac{(224 + 231 + 226)}{3} = \frac{681}{3} = 227$$

Determine maximum deviation from average voltage.

(AB) 227-224 = 3-v

(BC) 231-227 = 4-v

(AC) 227-226 = 1-v

Maximum deviation is 4-v.

Determine percent of voltage imbalance.

$$\text{\% Voltage Imbalance} = 100x \frac{4}{227} = 1.76\%$$

This amount of phase imbalance is satisfactory as it is below the maximum allowable 2%.

IMPORTANT: If the supply voltage phase imbalance is more than 2%, contact your local electric utility company immediately.

48/50FE**08-16 Cooling Electrical Data

48/50FE UNIT SIZE	V-Ph-Hz	UNIT VOLTAGE RANGE		COMP 1		COMP 2		OFM (EA)		STD SCCR kA	HIGH SCCR kA	IFM			COMBUSTION FAN MOTOR (48 SERIES ONLY)	POWER EXHAUST	
		MIN	MAX	RLA	LRA	RLA	LRA	WATTS	FLA			TYPE	EFFCY AT FULL LOAD	FLA	FLA	KIT QTY	FLA (EA KIT)
08	208-3-60	187	253	12.2	120	12.2	120	325	1.5	5	10	MED	90%	6.4	0.48	1	3.8
												HIGH	90%	7.5			
	230-3-60	187	253	12.2	120	12.2	120	325	1.5	5	10	MED	90%	6.4	0.48	1	3.8
												HIGH	90%	7.5			
	460-3-60	414	506	6.4	49	6.4	49	325	0.8	5	10	MED	90%	3.0	0.25	1	3.8
												HIGH	90%	3.5			
	575-3-60	518	633	5.1	4	5.1	4	325	0.6	5	—	MED	90%	2.5	0.24	1	3.8
												HIGH	90%	3.0			
09	208-3-60	187	253	12.8	120	12.8	120	325	1.5	5	10	MED	90%	6.4	0.48	1	3.8
												HIGH	90%	7.5			
	230-3-60	187	253	12.8	120	12.8	120	325	1.5	5	10	MED	90%	6.4	0.48	1	3.8
												HIGH	90%	7.5			
	460-3-60	414	506	6.0	49	6.0	49	325	0.8	5	10	MED	90%	3.0	0.25	1	3.8
												HIGH	90%	3.5			
	575-3-60	518	633	5.8	41	5.8	41	325	0.6	5	—	MED	90%	2.5	0.24	1	3.8
												HIGH	90%	3.0			
12	208-3-60	187	253	18.6	16	18.6	16	325	1.5	5	10	MED	90%	6.4	0.48	1	3.8
												HIGH	90%	12.6			
	230-3-60	187	253	18.6	16	18.6	16	325	1.5	5	10	MED	90%	6.4	0.48	1	3.8
												HIGH	90%	12.6			
	460-3-60	414	506	8.3	58	8.3	58	325	0.8	5	10	MED	90%	3.0	0.25	1	3.8
												HIGH	90%	5.6			
	575-3-60	518	633	7.7	48	7.7	48	325	0.6	5	—	MED	90%	2.5	0.24	1	3.8
												HIGH	90%	4.6			
14	208-3-60	187	253	22.3	166	21.1	157	1070	7.4	5	—	MED	90%	7.5	0.48	1	3.8
												HIGH	90%	12.6			
	230-3-60	187	253	22.3	166	21.1	157	1070	7.4	5	—	MED	90%	7.5	0.48	1	3.8
												HIGH	90%	12.6			
	460-3-60	414	506	8.8	75	9.1	75	1070	7.4	5	—	MED	90%	3.5	0.25	1	3.8
												HIGH	90%	5.6			
	575-3-60	518	633	7.2	54	7.7	48	1070	7.4	5	—	MED	90%	3.0	0.24	1	3.8
												HIGH	90%	4.6			
16	208-3-60	187	253	28.5	255	21.1	157	280	1.5	5	10	MED	90%	7.5	0.48	1	3.8
												HIGH	90%	12.6			
	230-3-60	187	253	28.5	255	21.1	157	280	1.5	5	10	MED	90%	7.5	0.48	1	3.8
												HIGH	90%	12.6			
	460-3-60	414	506	13.4	123	9.1	75	280	0.8	5	10	MED	90%	3.5	0.25	1	3.8
												HIGH	90%	5.6			
	575-3-60	518	633	10.7	94	7.7	48	280	0.6	5	—	MED	90%	3.0	0.24	1	3.8
												HIGH	90%	4.6			

48FE**08-16 MCA MOCP Electrical Data

48FE UNIT SIZE	NOM. V-Ph-Hz	IFM TYPE	STD SCCR kA	HIGH SCCR kA[a]	NO CONVENIENCE OUTLET OR UNPOWERED CONVENIENCE OUTLET							
					NO POWER EXHAUST				WITH POWER EXHAUST (powered from unit)			
					MCA	FUSE OR HACR BREAKER	DISCONNECT SIZE		MCA	FUSE OR HACR BREAKER	DISCONNECT SIZE	
							FLA	LRA			FLA	LRA
48FE**08	208/230-3-60	STD/MED	5	10	37	45	39	257	41	50	43	261
		HIGH	5	10	38	50	40	259	42	50	45	263
	460-3-60	STD/MED	5	10	19	25	20	106	21	25	22	108
		HIGH	5	10	20	25	21	109	22	25	23	111
	575-3-60	STD/MED	5	—	16	20	16	90	19	25	20	20
		HIGH	5	—	16	20	17	91	20	25	21	21
48FE**09	208/230-3-60	STD/MED	5	10	39	50	40	257	42	50	45	261
		HIGH	5	10	40	50	42	259	44	50	46	263
	460-3-60	STD/MED	5	10	19	20	19	106	20	25	21	108
		HIGH	5	10	19	25	20	109	21	25	22	111
	575-3-60	STD/MED	5	—	17	20	18	90	21	25	22	94
		HIGH	5	—	18	20	18	91	22	25	23	95
48FE**12	208/230-3-60	STD/MED	5	10	52	60	54	49	56	60	58	53
		HIGH	5	10	58	70	61	58	62	70	65	62
	460-3-60	STD/MED	5	10	24	30	24	124	26	30	26	126
		HIGH	5	10	26	30	27	128	28	30	29	130
	575-3-60	STD/MED	5	—	21	25	22	104	25	30	26	108
		HIGH	5	—	24	30	24	106	27	30	29	110
48FE**14	208/230-3-60	STD/MED	5	—	64	80	67	341	68	80	71	345
		HIGH	5	—	69	80	73	348	73	80	77	352
	460-3-60	STD/MED	5	—	32	40	33	164	33	40	35	166
		HIGH	5	—	34	40	36	165	35	40	38	167
	575-3-60	STD/MED	5	—	28	30	29	114	31	35	33	118
		HIGH	5	—	29	35	31	115	33	40	35	119
48FE**16	208/230-3-60	STD/MED	5	10	69	80	71	435	73	80	75	439
		HIGH	5	10	74	100	77	442	78	100	81	446
	460-3-60	STD/MED	5	10	32	45	33	211	34	45	35	213
		HIGH	5	10	34	45	35	212	36	45	37	214
	575-3-60	STD/MED	5	—	26	30	27	153	30	40	31	157
		HIGH	5	—	28	35	29	154	32	40	33	158

NOTE(S):

a. High SCCR (Short Circuit Current Rating) is not available on units with Humidi-MiZer system, powered convenience outlet, phase loss monitor, non-fused disconnect, or 575-v.

48FE**08-16 MCA MOCP Electrical Data (cont)

48FE UNIT SIZE	NOM. V-Ph-Hz	IFM TYPE	STD SCCR kA	WITH POWERED CONVENIENCE OUTLET							
				NO POWER EXHAUST				WITH POWER EXHAUST (powered from unit)			
				MCA	FUSE OR HACR BREAKER	DISCONNECT SIZE		MCA	FUSE OR HACR BREAKER	DISCONNECT SIZE	
						FLA	LRA			FLA	LRA
48FE**08	208/230-3-60	STD/MED	5	42	50	44	262	46	50	49	266
		HIGH	5	43	50	46	264	47	50	50	268
	460-3-60	STD/MED	5	22	25	23	108	23	25	25	110
		HIGH	5	22	25	23	111	24	30	25	113
	575-3-60	STD/MED	5	17	20	18	92	21	25	22	22
		HIGH	5	18	20	19	93	22	25	23	23
48FE**09	208/230-3-60	STD/MED	5	43	50	46	262	47	50	50	266
		HIGH	5	45	50	47	264	48	60	51	268
	460-3-60	STD/MED	5	21	25	22	108	23	25	24	110
		HIGH	5	21	25	22	111	23	25	24	113
	575-3-60	STD/MED	5	19	20	20	92	23	25	24	96
		HIGH	5	19	25	20	93	23	25	24	97
48FE**12	208/230-3-60	STD/MED	5	57	70	59	54	60	70	63	58
		HIGH	5	63	80	66	63	67	80	71	67
	460-3-60	STD/MED	5	26	30	27	126	28	30	29	128
		HIGH	5	29	35	30	130	30	35	32	132
	575-3-60	STD/MED	5	23	30	24	106	27	30	28	110
		HIGH	5	25	30	26	108	29	35	31	112
48FE**14	208/230-3-60	STD/MED	5	69	80	73	346	73	80	77	350
		HIGH	5	74	80	78	353	—	—	—	—
	460-3-60	STD/MED	5	34	40	36	166	36	40	38	168
		HIGH	5	36	40	38	167	38	45	40	169
	575-3-60	STD/MED	5	29	35	31	116	33	40	35	120
		HIGH	5	31	35	33	117	35	40	37	121
48FE**16	208/230-3-60	STD/MED	5	74	100	76	440	78	100	81	444
		HIGH	5	79	100	82	447	83	100	87	451
	460-3-60	STD/MED	5	34	45	35	213	36	45	37	215
		HIGH	5	37	45	38	214	38	50	40	216
	575-3-60	STD/MED	5	28	35	29	155	32	40	33	159
		HIGH	5	30	35	30	156	33	40	35	160

Electrical data (cont)

50FE-*08 MCA MOCP Electrical Data

50FE UNIT SIZE	NOM. V-Ph-Hz	IFM TYPE	STD SCCR kA	HIGH SCCR kA[a]	ELECTRIC HEATER			NO CONVENIENCE OUTLET or UNPOWERED CONVENIENCE OUTLET							
								NO POWER EXHAUST				WITH POWER EXHAUST (powered from unit)			
					CRHEATER ****00	NOM (kW)	FLA	MCA	FUSE OR HACR BRKR	DISCONNECT SIZE		MCA	FUSE OR HACR BRKR	DISCONNECT SIZE	
										FLA	LRA			FLA	LRA
50FE-*08	208/230-3-60	STD/ MED	5	10	—	—	—	37	45	39	257	41	50	43	261
					411A	7.8/10.4	21.7/25.0	37/40	45/45	39/39	257/257	41/44	50/50	43/43	261/261
					412A	12.0/16.0	33.4/38.5	50/57	50/60	46/52	257/257	55/61	60/70	50/56	261/261
					414A	18.8/25.0	52.1/60.1	74/84	80/90	67/76	257/257	78/88	80/90	72/81	261/261
					415A	24.0/32.0	66.7/77.0	92/105	100/110	84/96	257/257	97/109	100/110	88/100	261/261
					416A	31.8/42.4	88.4/102.0	119/136	125/150	109/125	257/257	124/141	125/150	113/129	261/261
		HIGH	5	10	—	—	—	38	50	40	259	42	50	45	263
					411A	7.8/10.4	21.7/25.0	38/41	50/50	40/40	259/259	42/46	50/50	45/45	263/263
					412A	12.0/16.0	33.4/38.5	52/58	60/60	47/53	259/259	56/63	60/70	51/57	263/263
					414A	18.8/25.0	52.1/60.1	75/85	80/90	69/78	259/259	80/90	80/90	73/82	263/263
					415A	24.0/32.0	66.7/77.0	93/106	100/110	85/97	259/259	98/111	100/125	90/102	263/263
					416A	31.8/42.4	88.4/102.0	120/137	125/150	110/126	259/259	125/142	125/150	115/130	263/263
	460-3-60	STD/ MED	5	10	—	—	—	19	25	20	106	21	25	22	108
					420A	15.0	18.0	27	30	24	106	29	30	26	108
					421A	25.0	30.1	42	45	38	106	44	45	40	108
					422A	33.0	39.7	54	60	49	106	56	60	51	108
					423A	41.7	50.2	67	70	61	106	69	70	63	108
		HIGH	5	10	—	—	—	20	25	21	109	22	25	23	111
					420A	15.0	18.0	27	30	25	109	30	30	27	111
					421A	25.0	30.1	42	45	39	109	45	45	41	111
					422A	33.0	39.7	54	60	50	109	57	60	52	111
					423A	41.7	50.2	68	70	62	109	70	70	64	111
	575-3-60	STD/ MED	5	—	—	—	—	16	20	16	90	19	25	20	94
					425A	18.0	17.3	25	25	23	90	30	30	27	94
					427A	36.0	34.6	47	50	43	90	52	60	47	94
		HIGH	5	—	—	—	—	16	20	17	91	20	25	21	95
					425A	18.0	17.3	26	30	23	91	31	35	28	95
					427A	36.0	34.6	47	50	43	91	52	60	48	95

NOTE(S):

a. High SCCR (Short Circuit Current Rating) is not available on units with Humidi-MiZer system, powered convenience outlet, phase loss monitor, non-fused disconnect, or 575-v.

50FE-*08 MCA MOCP Electrical Data (cont)

50FE UNIT SIZE	NOM. V-Ph-Hz	IFM TYPE	STD SCCR kA	ELECTRIC HEATER			WITH POWERED CONVENIENCE OUTLET							
							NO POWER EXHAUST				WITH POWER EXHAUST (powered from unit)			
				CRHEATER ****00	NOM (kW)	FLA	MCA	FUSE OR HACR BRKR	DISCONNECT SIZE		MCA	FUSE OR HACR BRKR	DISCONNECT SIZE	
									FLA	LRA			FLA	LRA
50FE-*08	208/230-3-60	STD/ MED	5	—	—	—	42	50	44	262	46	50	49	266
				411A	7.8/10.4	21.7/25.0	42/46	50/50	44/44	262/262	46/50	50/60	49/49	266/266
				412A	12.0/16.0	33.4/38.5	56/63	60/70	51/57	262/262	61/67	70/70	56/62	266/266
				414A	18.8/25.0	52.1/60.1	80/90	80/90	73/82	262/262	84/94	90/100	77/86	266/266
				415A	24.0/32.0	66.7/77.0	98/111	100/125	90/101	262/262	103/115	110/125	94/106	266/266
				416A	31.8/42.4	88.4/102.0	125/142	125/150	115/130	262/262	130/147	150/150	119/135	266/266
		HIGH	5	—	—	—	43	50	46	264	47	50	50	268
				411A	7.8/10.4	21.7/25.0	43/47	50/50	46/46	264/264	48/52	50/60	50/50	268/268
				412A	12.0/16.0	33.4/38.5	58/64	60/70	53/58	264/264	62/69	70/70	57/63	268/268
				414A	18.8/25.0	52.1/60.1	81/91	90/100	74/83	264/264	86/96	90/100	78/88	268/268
				415A	24.0/32.0	66.7/77.0	99/112	100/125	91/103	264/264	104/117	110/125	95/107	268/268
				416A	31.8/42.4	88.4/102.0	126/143	150/150	116/131	264/264	131/148	150/150	120/136	268/268
	460-3-60	STD/ MED	5	—	—	—	22	25	23	108	23	25	25	110
				420A	15.0	18.0	29	30	27	108	32	35	29	110
				421A	25.0	30.1	45	45	41	108	47	50	43	110
				422A	33.0	39.7	57	60	52	108	59	60	54	110
				423A	41.7	50.2	70	70	64	108	72	80	66	110
		HIGH	5	—	—	—	22	25	23	111	24	30	25	113
				420A	15.0	18.0	30	30	27	111	32	35	29	113
				421A	25.0	30.1	45	45	41	111	47	50	43	113
				422A	33.0	39.7	57	60	52	111	59	60	54	113
				423A	41.7	50.2	70	70	64	111	73	80	66	113
	575-3-60	STD/ MED	5	—	—	—	17	20	18	92	21	25	22	96
				425A	18.0	17.3	27	30	25	92	32	35	29	96
				427A	36.0	34.6	49	50	45	92	54	60	49	96
		HIGH	5	—	—	—	18	20	19	93	22	25	23	97
				425A	18.0	17.3	28	30	25	93	33	35	30	97
				427A	36.0	34.6	50	50	45	93	54	60	50	97

50FE-*09 MCA MOCP Electrical Data

50FE UNIT SIZE	NOM. V-Ph-Hz	IFM TYPE	STD SCCR kA	HIGH SCCR kA[a]	ELECTRIC HEATER			NO CONVENIENCE OUTLET or UNPOWERED CONVENIENCE OUTLET							
								NO POWER EXHAUST				WITH POWER EXHAUST (powered from unit)			
					CRHEATER ****00	NOM (kW)	FLA	MCA	FUSE OR HACR BRKR	DISCONNECT SIZE		MCA	FUSE OR HACR BRKR	DISCONNECT SIZE	
										FLA	LRA			FLA	LRA
50FE-*09	208/230-3-60	STD/ MED	5	10	—	—	—	39	50	40	257	42	50	45	261
					411A	7.8/10.4	21.7/25.0	39/40	50/50	40/40	257/257	42/44	50/50	45/45	261/261
					412A	12.0/16.0	33.4/38.5	50/57	50/60	46/52	257/257	55/61	60/70	50/56	261/261
					414A	18.8/25.0	52.1/60.1	74/84	80/90	67/76	257/257	78/88	80/90	72/81	261/261
					415A	24.0/32.0	66.7/77.0	92/105	100/110	84/96	257/257	97/109	100/110	88/100	261/261
					416A	31.8/42.4	88.4/102.0	119/136	125/150	109/125	257/257	124/141	125/150	113/129	261/261
		HIGH	5	10	—	—	—	40	50	42	259	44	50	46	263
					411A	7.8/10.4	21.7/25.0	40/41	50/50	42/42	259/259	44/46	50/50	46/46	263/263
					412A	12.0/16.0	33.4/38.5	52/58	60/60	47/53	259/259	56/63	60/70	51/57	263/263
					414A	18.8/25.0	52.1/60.1	75/85	80/90	69/78	259/259	80/90	80/90	73/82	263/263
					415A	24.0/32.0	66.7/77.0	93/106	100/110	85/97	259/259	98/111	100/125	90/102	263/263
					416A	31.8/42.4	88.4/102.0	120/137	125/150	110/126	259/259	125/142	125/150	115/130	263/263
	460-3-60	STD/ MED	5	10	—	—	—	19	20	19	106	20	25	21	108
					420A	15.0	18.0	27	30	24	106	29	30	26	108
					421A	25.0	30.1	42	45	38	106	44	45	40	108
					422A	33.0	39.7	54	60	49	106	56	60	51	108
					423A	41.7	50.2	67	70	61	106	69	70	63	108
		HIGH	5	10	—	—	—	19	25	20	109	21	25	22	111
					420A	15.0	18.0	27	30	25	109	30	30	27	111
					421A	25.0	30.1	42	45	39	109	45	45	41	111
					422A	33.0	39.7	54	60	50	109	57	60	52	111
					423A	41.7	50.2	68	70	62	109	70	70	64	111
	575-3-60	STD/ MED	5	—	—	—	—	17	20	18	90	21	25	22	94
					425A	18.0	17.3	25	25	23	90	30	30	27	94
					427A	36.0	34.6	47	50	43	90	52	60	47	94
		HIGH	5	—	—	—	—	18	20	18	91	22	25	23	95
					425A	18.0	17.3	26	30	23	91	31	35	28	95
					427A	36.0	34.6	47	50	43	91	52	60	48	95

NOTE(S):

a. High SCCR (Short Circuit Current Rating) is not available on units with Humidi-MiZer system, powered convenience outlet, phase loss monitor, non-fused disconnect, or 575-v.

50FE-*09 MCA MOCP Electrical Data (cont)

50FE UNIT SIZE	NOM. V-Ph-Hz	IFM TYPE	STD SCCR kA	ELECTRIC HEATER			WITH POWERED CONVENIENCE OUTLET							
							NO POWER EXHAUST				WITH POWER EXHAUST (powered from unit)			
				CRHEATER ****00	NOM (kW)	FLA	MCA	FUSE OR HACR BRKR	DISCONNECT SIZE		MCA	FUSE OR HACR BRKR	DISCONNECT SIZE	
									FLA	LRA			FLA	LRA
50FE-*09	208/230-3-60	STD/ MED	5	—	—	—	43	50	46	262	47	50	50	266
				411A	7.8/10.4	21.7/25.0	43/46	50/50	46/46	262/262	47/50	50/60	50/50	266/266
				412A	12.0/16.0	33.4/38.5	56/63	60/70	51/57	262/262	61/67	70/70	56/62	266/266
				414A	18.8/25.0	52.1/60.1	80/90	80/90	73/82	262/262	84/94	90/100	77/86	266/266
				415A	24.0/32.0	66.7/77.0	98/111	100/125	90/101	262/262	103/115	110/125	94/106	266/266
				416A	31.8/42.4	88.4/102.0	125/142	125/150	115/130	262/262	130/147	150/150	119/135	266/266
		HIGH	5	—	—	—	45	50	47	264	48	60	51	268
				411A	7.8/10.4	21.7/25.0	45/47	50/50	47/47	264/264	48/52	60/60	51/51	268/268
				412A	12.0/16.0	33.4/38.5	58/64	60/70	53/58	264/264	62/69	70/70	57/63	268/268
				414A	18.8/25.0	52.1/60.1	81/91	90/100	74/83	264/264	86/96	90/100	78/88	268/268
				415A	24.0/32.0	66.7/77.0	99/112	100/125	91/103	264/264	104/117	110/125	95/107	268/268
				416A	31.8/42.4	88.4/102.0	126/143	150/150	116/131	264/264	131/148	150/150	120/136	268/268
	460-3-60	STD/ MED	5	—	—	—	21	25	22	108	23	25	24	110
				420A	15.0	18.0	29	30	27	108	32	35	29	110
				421A	25.0	30.1	45	45	41	108	47	50	43	110
				422A	33.0	39.7	57	60	52	108	59	60	54	110
				423A	41.7	50.2	70	70	64	108	72	80	66	110
		HIGH	5	—	—	—	21	25	22	111	23	25	24	113
				420A	15.0	18.0	30	30	27	111	32	35	29	113
				421A	25.0	30.1	45	45	41	111	47	50	43	113
				422A	33.0	39.7	57	60	52	111	59	60	54	113
				423A	41.7	50.2	70	70	64	111	73	80	66	113
	575-3-60	STD/ MED	5	—	—	—	19	20	20	92	23	25	24	96
				425A	18.0	17.3	27	30	25	92	32	35	29	96
				427A	36.0	34.6	49	50	45	92	54	60	49	96
		HIGH	5	—	—	—	19	25	20	93	23	25	24	97
				425A	18.0	17.3	28	30	25	93	33	35	30	97
				427A	36.0	34.6	50	50	45	93	54	60	50	97

50FE-*12 MCA MOCP Electrical Data

50FE UNIT SIZE	NOM. V-Ph-Hz	IFM TYPE	STD SCCR kA	HIGH SCCR kA[a]	ELECTRIC HEATER			NO CONVENIENCE OUTLET or UNPOWERED CONVENIENCE OUTLET							
								NO POWER EXHAUST				WITH POWER EXHAUST (powered from unit)			
					CRHEATER ****00	NOM (kW)	FLA	MCA	FUSE OR HACR BRKR	DISCONNECT SIZE		MCA	FUSE OR HACR BRKR	DISCONNECT SIZE	
										FLA	LRA			FLA	LRA
50FE-*12	208/230-3-60	STD/MED	5	10	—	—	—	52	60	54	327	56	60	58	331
					411A	7.8/10.4	21.7/25.0	52/52	60/60	54/54	327/327	56/56	60/60	58/58	331/331
					412A	12.0/16.0	33.4/38.5	52/57	60/60	54/54	327/327	56/61	60/70	58/58	331/331
					415A	24.0/32.0	66.7/77.0	92/105	100/110	84/96	327/327	97/109	100/110	88/100	331/331
					416A	31.8/42.4	88.4/102.0	119/136	125/150	109/125	327/327	124/141	125/150	113/129	331/331
					417A	37.6/50.0	104.2/120.3	139/129	150/150	127/146	327/327	143/134	150/150	132/150	331/331
		HIGH	5	10	—	—	—	58	70	61	336	62	70	65	340
					411A	7.8/10.4	21.7/25.0	58/58	70/70	61/61	336/336	62/62	70/70	65/65	340/340
					412A	12.0/16.0	33.4/38.5	58/64	70/70	61/61	336/336	63/69	70/70	65/65	340/340
					415A	24.0/32.0	66.7/77.0	100/112	100/125	91/103	336/336	104/117	110/125	96/107	340/340
					416A	31.8/42.4	88.4/102.0	127/144	150/150	116/132	336/336	131/148	150/150	121/136	340/340
					417A	37.6/50.0	104.2/120.3	146/137	150/150	134/153	336/336	151/141	175/175	139/157	340/340
	460-3-60	STD/MED	5	10	—	—	—	24	30	24	124	26	30	26	126
					420A	15.0	18.0	27	30	24	124	29	30	26	126
					422A	33.0	39.7	54	60	49	124	56	60	51	126
					423A	41.7	50.2	67	70	61	124	69	70	63	126
					424A	50.0	60.1	64	70	73	124	67	70	75	126
		HIGH	5	10	—	—	—	26	30	27	128	28	30	29	130
					420A	15.0	18.0	30	30	27	128	32	35	29	130
					422A	33.0	39.7	57	60	52	128	59	60	54	130
					423A	41.7	50.2	70	70	64	128	72	80	66	130
					424A	50.0	60.1	68	80	76	128	70	80	78	130
	575-3-60	STD/MED	5	—	—	—	—	21	25	22	104	25	30	26	108
					425A	18.0	17.3	25	25	23	104	30	30	27	108
					427A	36.0	34.6	47	50	43	104	52	60	47	108
					428A	50.0	48.1	52	60	58	104	56	60	63	108
		HIGH	5	—	—	—	—	24	30	24	106	27	30	29	110
					425A	18.0	17.3	28	30	25	106	33	35	30	110
					427A	36.0	34.6	49	50	45	106	54	60	49	110
					428A	50.0	48.1	54	60	61	106	59	60	65	110

NOTE(S):

a. High SCCR (Short Circuit Current Rating) is not available on units with Humidi-MiZer system, powered convenience outlet, phase loss monitor, non-fused disconnect, or 575-v.

50FE-*12 MCA MOCP Electrical Data (cont)

50FE UNIT SIZE	NOM. V-Ph-Hz	IFM TYPE	STD SCCR kA	ELECTRIC HEATER			WITH POWERED CONVENIENCE OUTLET							
							NO POWER EXHAUST				WITH POWER EXHAUST (powered from unit)			
				CRHEATER ****00	NOM (kW)	FLA	MCA	FUSE OR HACR BRKR	DISCONNECT SIZE		MCA	FUSE OR HACR BRKR	DISCONNECT SIZE	
									FLA	LRA			FLA	LRA
50FE-*12	208/230-3-60	STD/ MED	5	—	—	—	57	70	59	332	60	70	63	336
				411A	7.8/10.4	21.7/25.0	57/57	70/70	59/59	332/332	60/60	70/70	63/63	336/336
				412A	12.0/16.0	33.4/38.5	57/63	70/70	59/59	332/332	61/67	70/70	63/63	336/336
				415A	24.0/32.0	66.7/77.0	98/111	100/125	90/101	332/332	103/115	110/125	94/106	336/336
				416A	31.8/42.4	88.4/102.0	125/142	125/150	115/130	332/332	130/147	150/150	119/135	336/336
				417A	37.6/50.0	104.2/120.3	145/135	150/150	133/151	332/332	149/140	150/150	137/156	336/336
		HIGH	5	—	—	—	63	80	66	341	67	80	71	345
				411A	7.8/10.4	21.7/25.0	63/63	80/80	66/66	341/341	67/67	80/80	71/71	345/345
				412A	12.0/16.0	33.4/38.5	64/70	80/80	66/66	341/341	69/75	80/80	71/71	345/345
				415A	24.0/32.0	66.7/77.0	106/118	110/125	97/109	341/341	110/123	110/125	101/113	345/345
				416A	31.8/42.4	88.4/102.0	133/150	150/150	122/137	341/341	137/154	150/175	126/142	345/345
				417A	37.6/50.0	104.2/120.3	152/143	175/175	140/158	341/341	157/147	175/175	144/163	345/345
	460-3-60	STD/ MED	5	—	—	—	26	30	27	126	28	30	29	128
				420A	15.0	18.0	29	30	27	126	32	35	29	128
				422A	33.0	39.7	57	60	52	126	59	60	54	128
				423A	41.7	50.2	70	70	64	126	72	80	66	128
				424A	50.0	60.1	67	70	75	126	69	80	77	128
		HIGH	5	—	—	—	29	35	30	130	30	35	32	132
				420A	15.0	18.0	33	35	30	130	35	35	32	132
				422A	33.0	39.7	60	60	55	130	62	70	57	132
				423A	41.7	50.2	73	80	67	130	75	80	69	132
				424A	50.0	60.1	70	80	78	130	73	80	80	132
	575-3-60	STD/ MED	5	—	—	—	23	30	24	106	27	30	28	110
				425A	18.0	17.3	27	30	25	106	32	35	29	110
				427A	36.0	34.6	49	50	45	106	54	60	49	110
				428A	50.0	48.1	54	60	60	106	59	60	65	110
		HIGH	5	—	—	—	25	30	26	108	29	35	31	112
				425A	18.0	17.3	30	30	27	108	35	35	32	112
				427A	36.0	34.6	52	60	47	108	56	60	51	112
				428A	50.0	48.1	56	60	63	108	61	70	67	112

Electrical data (cont)

50FE-*14 MCA MOCP Electrical Data

50FE UNIT SIZE	NOM. V-Ph-Hz	IFM TYPE	STD SCCR kA	ELECTRIC HEATER			NO CONVENIENCE OUTLET or UNPOWERED CONVENIENCE OUTLET							
							NO POWER EXHAUST				WITH POWER EXHAUST (powered from unit)			
				CRHEATER ****00	NOM (kW)	FLA	MCA	FUSE OR HACR BRKR	DISCONNECT SIZE		MCA	FUSE OR HACR BRKR	DISCONNECT SIZE	
									FLA	LRA			FLA	LRA
50FE-*14	208/230-3-60	STD/ MED	5	—	—	—	64	80	67	341	68	80	71	345
				411A	7.8/10.4	21.7/25.0	64/64	80/80	67/67	341/341	68/68	80/80	71/71	345/345
				412A	12.0/16.0	33.4/38.5	64/64	80/80	67/67	341/341	68/68	80/80	71/71	345/345
				415A	24.0/32.0	66.7/77.0	93/106	100/110	85/97	341/341	98/111	100/125	90/102	345/345
				416A	31.8/42.4	88.4/102.0	120/137	125/150	110/126	341/341	125/142	125/150	115/130	345/345
				417A	37.6/50.0	104.2/120.3	140/130	150/150	128/147	341/341	145/135	150/150	133/151	345/345
		HIGH	5	—	—	—	69	80	73	348	73	80	77	352
				411A	7.8/10.4	21.7/25.0	69/69	80/80	73/73	348/348	73/73	80/80	77/77	352/352
				412A	12.0/16.0	33.4/38.5	69/69	80/80	73/73	348/348	73/73	80/80	77/77	352/352
				415A	24.0/32.0	66.7/77.0	100/112	100/125	91/103	348/348	104/117	110/125	96/107	352/352
				416A	31.8/42.4	88.4/102.0	127/144	150/150	116/132	348/348	131/148	150/150	121/136	352/352
				417A	37.6/50.0	104.2/120.3	146/137	150/150	134/153	348/348	151/141	175/175	139/157	352/352
	460-3-60	STD/ MED	5	—	—	—	32	40	33	164	33	40	35	166
				420A	15.0	18.0	32	40	33	164	33	40	35	166
				422A	33.0	39.7	54	60	50	164	57	60	52	166
				423A	41.7	50.2	68	70	62	164	70	70	64	166
				424A	50.0	60.1	65	70	73	164	67	70	75	166
		HIGH	5	—	—	—	34	40	36	165	35	40	38	167
				420A	15.0	18.0	34	40	36	165	35	40	38	167
				422A	33.0	39.7	57	60	52	165	59	60	54	167
				423A	41.7	50.2	70	70	64	165	72	80	66	167
				424A	50.0	60.1	68	80	76	165	70	80	78	167
	575-3-60	STD/ MED	5	—	—	—	28	30	29	114	31	35	33	118
				425A	18.0	17.3	28	30	29	114	31	35	33	118
				427A	36.0	34.6	47	50	43	114	52	60	48	118
				428A	50.0	48.1	52	60	59	114	57	60	63	118
		HIGH	5	—	—	—	29	35	31	115	33	40	35	119
				425A	18.0	17.3	29	35	31	115	33	40	35	119
				427A	36.0	34.6	49	50	45	115	54	60	49	119
				428A	50.0	48.1	54	60	61	115	59	60	65	119

50FE-*14 MCA MOCP Electrical Data (cont)

50FE UNIT SIZE	NOM. V-Ph-Hz	IFM TYPE	STD SCCR kA	ELECTRIC HEATER			WITH POWERED CONVENIENCE OUTLET							
							NO POWER EXHAUST				WITH POWER EXHAUST (powered from unit)			
				CRHEATER ****00	NOM (kW)	FLA	MCA	FUSE OR HACR BRKR	DISCONNECT SIZE		MCA	FUSE OR HACR BRKR	DISCONNECT SIZE	
									FLA	LRA			FLA	LRA
50FE-*14	208/230-3-60	STD/ MED	5	—	—	—	69	80	73	346	73	80	77	350
				411A	7.8/10.4	21.7/25.0	69/69	80/80	73/73	346/346	73/73	80/80	77/77	350/350
				412A	12.0/16.0	33.4/38.5	69/69	80/80	73/73	346/346	73/73	80/80	77/77	350/350
				415A	24.0/32.0	66.7/77.0	99/112	100/125	91/103	346/346	104/117	110/125	95/107	350/350
				416A	31.8/42.4	88.4/102.0	126/143	150/150	116/131	346/346	131/148	150/150	120/136	350/350
				417A	37.6/50.0	104.2/120.3	146/136	150/150	134/152	346/346	151/141	175/150	138/157	350/350
		HIGH	5	—	—	—	74	80	78	353	78	90	83	357
				411A	7.8/10.4	21.7/25.0	74/74	80/80	78/78	353/353	78/78	90/90	83/83	357/357
				412A	12.0/16.0	33.4/38.5	74/74	80/80	78/78	353/353	78/78	90/90	83/83	357/357
				415A	24.0/32.0	66.7/77.0	106/118	110/125	97/109	353/353	110/123	110/125	101/113	357/357
				416A	31.8/42.4	88.4/102.0	133/150	150/150	122/137	353/353	137/154	150/175	126/142	357/357
				417A	37.6/50.0	104.2/120.3	152/143	175/175	140/158	353/353	157/147	175/175	144/163	357/357
	460-3-60	STD/ MED	5	—	—	—	34	40	36	166	36	40	38	168
				420A	15.0	18.0	34	40	36	166	36	40	38	168
				422A	33.0	39.7	57	60	52	166	59	60	54	168
				423A	41.7	50.2	70	70	64	166	73	80	66	168
				424A	50.0	60.1	68	80	76	166	70	80	78	168
		HIGH	5	—	—	—	36	40	38	167	38	45	40	169
				420A	15.0	18.0	36	40	38	167	38	45	40	169
				422A	33.0	39.7	60	60	55	167	62	70	57	169
				423A	41.7	50.2	73	80	67	167	75	80	69	169
				424A	50.0	60.1	70	80	78	167	73	80	80	169
	575-3-60	STD/ MED	5	—	—	—	29	35	31	116	33	40	35	120
				425A	18.0	17.3	29	35	31	116	33	40	35	120
				427A	36.0	34.6	50	50	45	116	54	60	50	120
				428A	50.0	48.1	54	60	61	116	59	60	65	120
		HIGH	5	—	—	—	31	35	33	117	35	40	37	121
				425A	18.0	17.3	31	35	33	117	35	40	37	121
				427A	36.0	34.6	52	60	47	117	56	60	51	121
				428A	50.0	48.1	56	60	63	117	61	70	67	121

Electrical data (cont)

50FE-*16 MCA MOCP Electrical Data

50FE UNIT SIZE	NOM. V-Ph-Hz	IFM TYPE	STD SCCR kA	HIGH SCCR kA[a]	ELECTRIC HEATER			NO CONVENIENCE OUTLET or UNPOWERED CONVENIENCE OUTLET							
								NO POWER EXHAUST				WITH POWER EXHAUST (powered from unit)			
					CRHEATER ****00	NOM (kW)	FLA	MCA	FUSE OR HACR BRKR	DISCONNECT SIZE		MCA	FUSE OR HACR BRKR	DISCONNECT SIZE	
										FLA	LRA			FLA	LRA
50FE-*16	208/230-3-60	STD/MED	5	10	—	—	—	69	80	71	435	73	80	75	439
					412A	12.0/16.0	33.4/38.5	69/69	80/80	71/71	435/435	73/73	80/80	75/75	439/439
					414A	18.8/25.0	52.1/60.1	75/85	80/90	71/78	435/435	80/90	80/100	75/82	439/439
					415A	24.0/32.0	66.7/77.0	93/106	100/110	85/97	435/435	98/111	100/125	90/102	439/439
					416A	31.8/42.4	88.4/102.0	120/137	125/150	110/126	435/435	125/142	125/150	115/130	439/439
					417A	37.6/50.0	104.2/120.3	140/130	150/150	128/147	435/435	145/135	150/150	133/151	439/439
					451A	50.3/67.0	139.7/161.2	150/171	175/200	169/194	435/435	154/176	175/200	174/198	439/439
		HIGH	5	10	—	—	—	74	100	77	442	78	100	81	446
					412A	12.0/16.0	33.4/38.5	74/74	100/100	77/77	442/442	78/78	100/100	81/81	446/446
					414A	18.8/25.0	52.1/60.1	81/91	100/100	77/84	442/442	86/96	100/100	81/88	446/446
					415A	24.0/32.0	66.7/77.0	100/112	100/125	91/103	442/442	104/117	110/125	96/107	446/446
					416A	31.8/42.4	88.4/102.0	127/144	150/150	116/132	442/442	131/148	150/150	121/136	446/446
					417A	37.6/50.0	104.2/120.3	146/137	150/150	134/153	442/442	151/141	175/175	139/157	446/446
					451A	50.3/67.0	139.7/161.2	156/177	175/200	175/200	442/442	161/182	175/200	180/204	446/446
	460-3-60	STD/MED	5	10	—	—	—	32	45	33	211	34	45	35	213
					420A	15.0	18.0	32	45	33	211	34	45	35	213
					421A	25.0	30.1	42	45	39	211	45	45	41	213
					422A	33.0	39.7	54	60	50	211	57	60	52	213
					423A	41.7	50.2	68	70	62	211	70	70	64	213
					424A	50.0	60.1	65	70	73	211	67	70	75	213
					452A	67.0	80.6	85	90	97	211	88	100	99	213
		HIGH	5	10	—	—	—	34	45	35	212	36	45	37	214
					420A	15.0	18.0	34	45	35	212	36	45	37	214
					421A	25.0	30.1	45	45	41	212	47	50	43	214
					422A	33.0	39.7	57	60	52	212	59	60	54	214
					423A	41.7	50.2	70	70	64	212	72	80	66	214
					424A	50.0	60.1	68	80	76	212	70	80	78	214
					452A	67.0	80.6	88	100	99	212	90	100	101	214
	575-3-60	STD/MED	5	—	—	—	—	26	30	27	153	30	40	31	157
					425A	18.0	17.3	26	30	27	153	31	40	31	157
					427A	36.0	34.6	47	50	43	153	52	60	48	157
					428A	50.0	48.1	52	60	59	153	57	60	63	157
					453A	67.0	64.5	69	80	78	153	73	80	82	157
		HIGH	5	—	—	—	—	28	35	29	154	32	40	33	158
					425A	18.0	17.3	28	35	29	154	33	40	33	158
					427A	36.0	34.6	49	50	45	154	54	60	49	158
					428A	50.0	48.1	54	60	61	154	59	60	65	158
					453A	67.0	64.5	71	80	79	154	75	80	84	158

NOTE(S):

a. High SCCR (Short Circuit Current Rating) is not available on units with Humidi-MiZer system, powered convenience outlet, phase loss monitor, non-fused disconnect, or 575-v.

50FE-*16 MCA MOCP Electrical Data (cont)

50FE UNIT SIZE	NOM. V-Ph-Hz	IFM TYPE	STD SCCR kA	ELECTRIC HEATER			WITH POWERED CONVENIENCE OUTLET							
							NO POWER EXHAUST				WITH POWER EXHAUST (powered from unit)			
				CRHEATER ****00	NOM (kW)	FLA	MCA	FUSE OR HACR BRKR	DISCONNECT SIZE		MCA	FUSE OR HACR BRKR	DISCONNECT SIZE	
									FLA	LRA			FLA	LRA
50FE-*16	208/230-3-60	STD/ MED	5	—	—	—	74	100	76	440	78	100	81	444
				412A	12.0/16.0	33.4/38.5	74/74	100/100	76/76	440/440	78/78	100/100	81/81	444/444
				414A	18.8/25.0	52.1/60.1	81/91	100/100	76/83	440/440	86/96	100/100	81/88	444/444
				415A	24.0/32.0	66.7/77.0	99/112	100/125	91/103	440/440	104/117	110/125	95/107	444/444
				416A	31.8/42.4	88.4/102.0	126/143	150/150	116/131	440/440	131/148	150/150	120/136	444/444
				417A	37.6/50.0	104.2/120.3	146/136	150/150	134/152	440/440	151/141	175/150	138/157	444/444
				451A	50.3/67.0	139.7/161.2	156/177	175/200	175/200	440/440	160/182	175/200	179/204	444/444
		HIGH	5	—	—	—	79	100	82	447	83	100	87	451
				412A	12.0/16.0	33.4/38.5	79/79	100/100	82/82	447/447	83/83	100/100	87/87	451/451
				414A	18.8/25.0	52.1/60.1	87/97	100/100	82/89	447/447	92/102	100/110	87/93	451/451
				415A	24.0/32.0	66.7/77.0	106/118	110/125	97/109	447/447	110/123	110/125	101/113	451/451
				416A	31.8/42.4	88.4/102.0	133/150	150/150	122/137	447/447	137/154	150/175	126/142	451/451
				417A	37.6/50.0	104.2/120.3	152/143	175/175	140/158	447/447	157/147	175/175	144/163	451/451
				451A	50.3/67.0	139.7/161.2	162/183	175/200	181/205	447/447	167/188	175/200	185/210	451/451
	460-3-60	STD/ MED	5	—	—	—	34	45	35	213	36	45	37	215
				420A	15.0	18.0	34	45	35	213	36	45	37	215
				421A	25.0	30.1	45	45	41	213	47	50	43	215
				422A	33.0	39.7	57	60	52	213	59	60	54	215
				423A	41.7	50.2	70	70	64	213	73	80	66	215
				424A	50.0	60.1	68	80	76	213	70	80	78	215
				452A	67.0	80.6	88	100	99	213	90	100	101	215
		HIGH	5	—	—	—	37	45	38	214	38	50	40	216
				420A	15.0	18.0	37	45	38	214	38	50	40	216
				421A	25.0	30.1	48	50	44	214	50	50	46	216
				422A	33.0	39.7	60	60	55	214	62	70	57	216
				423A	41.7	50.2	73	80	67	214	75	80	69	216
				424A	50.0	60.1	70	80	78	214	73	80	80	216
				452A	67.0	80.6	91	100	102	214	93	100	104	216
	575-3-60	STD/ MED	5	—	—	—	28	35	29	155	32	40	33	159
				425A	18.0	17.3	28	35	29	155	33	40	33	159
				427A	36.0	34.6	50	50	45	155	54	60	50	159
				428A	50.0	48.1	54	60	61	155	59	60	65	159
				453A	67.0	64.5	71	80	80	155	76	80	84	159
		HIGH	5	—	—	—	30	35	30	156	33	40	35	160
				425A	18.0	17.3	30	35	30	156	35	40	35	160
				427A	36.0	34.6	52	60	47	156	56	60	51	160
				428A	50.0	48.1	56	60	63	156	61	70	67	160
				453A	67.0	64.5	73	80	81	156	78	80	86	160

50FE-*08 Electric Heat Data — Without Non-fused Disconnect

50FE UNIT SIZE	NOM. V-Ph-Hz	IFM TYPE	ELECTRIC HEATER PART NUMBER	NOM (kW)	STD SCCR kA	HIGH SCCR kA[a]	APPLICATION (kW)	APPLICATION OUTPUT (MBH)	SINGLE POINT OR JUNCTION KIT PART NUMBER CRSINGLEXXXA00			
									NO C.O. OR UNPOWERED C.O.		WITH PWRD C.O.	
									NO P.E.	WITH P.E. (pwrd fr/unit)	NO P.E	WITH P.E. (pwrd fr/unit)
50FE-M08	208/230-3-60	STD/ MED	CRHEATER411A00	10.4	5	10	7.8/9.6	26.7/32.6	042	042	042	042
			CRHEATER412A00	16.0	5	10	12.0/14.7	41.0/50.1	042	043	043	043
			CRHEATER414A00	25.0	5	10	18.8/23.0	64.1/78.3	043	043	043	043
			CRHEATER415A00	32.0	5	10	24.0/29.4	82.0/100.3	043	043	043	043
			CRHEATER416A00	42.4	5	10	31.8/38.9	108.7/132.9	045	045	045	045
		HIGH	CRHEATER411A00	10.4	5	10	7.8/9.6	26.7/32.6	042	042	042	042
			CRHEATER412A00	16.0	5	10	12.0/14.7	41.0/50.1	042	043	043	043
			CRHEATER414A00	25.0	5	10	18.8/23.0	64.1/78.3	043	043	043	043
			CRHEATER415A00	32.0	5	10	24.0/29.4	82.0/100.3	043	043	043	043
			CRHEATER416A00	42.4	5	10	31.8/38.9	108.7/132.9	045	045	045	045
	460-3-60	STD/ MED	CRHEATER420A00	15.0	5	10	13.8	47.0	042	042	042	042
			CRHEATER421A00	25.0	5	10	23.0	78.3	042	042	042	042
			CRHEATER422A00	33.0	5	10	30.3	103.4	042	042	042	042
			CRHEATER423A00	41.7	5	10	38.3	130.7	044	044	044	044
		HIGH	CRHEATER420A00	15.0	5	10	13.8	47.0	042	042	042	042
			CRHEATER421A00	25.0	5	10	23.0	78.3	042	042	042	042
			CRHEATER422A00	33.0	5	10	30.3	103.4	042	042	042	042
			CRHEATER423A00	41.7	5	10	38.3	130.7	044	044	044	044
	575-3-60	STD/ MED	CRHEATER425A00	18.0	5	—	16.5	56.4	042	042	042	042
			CRHEATER427A00	36.0	5	—	33.1	112.8	042	042	042	042
		HIGH	CRHEATER425A00	18.0	5	—	16.5	56.4	042	042	042	042
			CRHEATER427A00	36.0	5	—	33.1	112.8	042	042	042	042

NOTE(S):

a. High SCCR (Short Circuit Current Rating) is not available on units with Humidi-MiZer system, powered convenience outlet, phase loss monitor, non-fused disconnect, or 575-v.

50FE-*08 Electric Heat Data — Without Non-fused Disconnect (cont)

50FE UNIT SIZE	NOM. V-Ph-Hz	IFM TYPE	ELECTRIC HEATER PART NUMBER	NOM (kW)	STD SCCR kA	HIGH SCCR kA[a]	APPLICATION (kW)	APPLICATION OUTPUT (MBH)	HSCCR SINGLE POINT OR JUNCTION KIT PART NUMBER CRSINGLEXXXA00			
									NO C.O. OR UNPOWERED C.O.		WITH PWRD C.O.	
									NO P.E.	WITH P.E. (pwrd fr/unit)	NO P.E	WITH P.E. (pwrd fr/unit)
50FE-M08	208/230-3-60	STD/MED	CRHEATER411A00	10.4	5	10	7.8/9.6	26.7/32.6	064	064	064	064
			CRHEATER412A00	16.0	5	10	12.0/14.7	41.0/50.1	064	064	064	064
			CRHEATER414A00	25.0	5	10	18.8/23.0	64.1/78.3	065	065	065	065
			CRHEATER415A00	32.0	5	10	24.0/29.4	82.0/100.3	065	065	065	065
			CRHEATER416A00	42.4	5	10	31.8/38.9	108.7/132.9	066	066	066	066
		HIGH	CRHEATER411A00	10.4	5	10	7.8/9.6	26.7/32.6	064	064	064	064
			CRHEATER412A00	16.0	5	10	12.0/14.7	41.0/50.1	064	064	064	064
			CRHEATER414A00	25.0	5	10	18.8/23.0	64.1/78.3	065	065	065	065
			CRHEATER415A00	32.0	5	10	24.0/29.4	82.0/100.3	065	065	065	065
			CRHEATER416A00	42.4	5	10	31.8/38.9	108.7/132.9	066	066	066	066
	460-3-60	STD/MED	CRHEATER420A00	15.0	5	10	13.8	47.0	064	064	064	064
			CRHEATER421A00	25.0	5	10	23.0	78.3	065	065	065	065
			CRHEATER422A00	33.0	5	10	30.3	103.4	065	065	065	065
			CRHEATER423A00	41.7	5	10	38.3	130.7	065	065	065	065
		HIGH	CRHEATER420A00	15.0	5	10	13.8	47.0	064	064	064	064
			CRHEATER421A00	25.0	5	10	23.0	78.3	065	065	065	065
			CRHEATER422A00	33.0	5	10	30.3	103.4	065	065	065	065
			CRHEATER423A00	41.7	5	10	38.3	130.7	065	065	065	065
	575-3-60	STD/MED	CRHEATER425A00	18.0	5	—	16.5	56.4	064	064	064	064
			CRHEATER427A00	36.0	5	—	33.1	112.8	065	065	065	065
		HIGH	CRHEATER425A00	18.0	5	—	16.5	56.4	064	064	064	064
			CRHEATER427A00	36.0	5	—	33.1	112.8	065	065	065	065

NOTE(S):

a. High SCCR (Short Circuit Current Rating) is not available on units with Humidi-MiZer system, powered convenience outlet, phase loss monitor, non-fused disconnect, or 575-v.

50FE-*08 Electric Heat Data — With Non-fused Disconnect

50FE UNIT SIZE	NOM. V-Ph-Hz	IFM TYPE	ELECTRIC HEATER PART NUMBER	NOM (kW)	STD SCCR kA	APPLICATION (kW)	APPLICATION OUTPUT (MBH)	SINGLE POINT OR JUNCTION KIT PART NUMBER CRSINGLEXXXA00			
								NO C.O. OR UNPOWERED C.O.		WITH PWRD C.O.	
								NO P.E.	WITH P.E. (pwrd fr/unit)	NO P.E	WITH P.E. (pwrd fr/unit)
50FE-M08	208/230-3-60	STD/ MED	CRHEATER411A00	10.4	5	7.8/9.6	26.7/32.6	042	042	042	042
			CRHEATER412A00	16.0	5	12.0/14.7	41.0/50.1	042	043	043	043
			CRHEATER414A00	25.0	5	18.8/23.0	64.1/78.3	043	043	043	043
			CRHEATER415A00	32.0	5	24.0/29.4	82.0/100.3	043	043	043	043
			CRHEATER416A00	42.4	5	31.8/38.9	108.7/132.9	045	045	045	045
		HIGH	CRHEATER411A00	10.4	5	7.8/9.6	26.7/32.6	042	042	042	042
			CRHEATER412A00	16.0	5	12.0/14.7	41.0/50.1	042	043	043	043
			CRHEATER414A00	25.0	5	18.8/23.0	64.1/78.3	043	043	043	043
			CRHEATER415A00	32.0	5	24.0/29.4	82.0/100.3	043	043	043	043
			CRHEATER416A00	42.4	5	31.8/38.9	108.7/132.9	045	045	045	045
	460-3-60	STD/ MED	CRHEATER420A00	15.0	5	13.8	47.0	042	042	042	042
			CRHEATER421A00	25.0	5	23.0	78.3	042	042	042	042
			CRHEATER422A00	33.0	5	30.3	103.4	042	042	042	042
			CRHEATER423A00	41.7	5	38.3	130.7	044	044	044	044
		HIGH	CRHEATER420A00	15.0	5	13.8	47.0	042	042	042	042
			CRHEATER421A00	25.0	5	23.0	78.3	042	042	042	042
			CRHEATER422A00	33.0	5	30.3	103.4	042	042	042	042
			CRHEATER423A00	41.7	5	38.3	130.7	044	044	044	044
	575-3-60	STD/ MED	CRHEATER425A00	18.0	5	16.5	56.4	042	042	042	042
			CRHEATER427A00	36.0	5	33.1	112.8	042	042	042	042
		HIGH	CRHEATER425A00	18.0	5	16.5	56.4	042	042	042	042
			CRHEATER427A00	36.0	5	33.1	112.8	042	042	042	042

50FE-*09 Electric Heat Data — Without Non-fused Disconnect

50FE UNIT SIZE	NOM. V-Ph-Hz	IFM TYPE	ELECTRIC HEATER PART NUMBER	NOM (kW)	STD SCCR kA	HIGH SCCR kA[a]	APPLICATION (kW)	APPLICATION OUTPUT (MBH)	SINGLE POINT OR JUNCTION KIT PART NUMBER CRSINGLEXXXA00			
									NO C.O. OR UNPOWERED C.O.		WITH PWRD C.O.	
									NO P.E.	WITH P.E. (pwrd fr/unit)	NO P.E	WITH P.E. (pwrd fr/unit)
50FE-M09	208/230-3-60	STD/MED	CRHEATER411A00	10.4	5	10	7.8/9.6	26.7/32.6	047	047	047	047
			CRHEATER412A00	16.0	5	10	12.0/14.7	41.0/50.1	047	049	049	049
			CRHEATER414A00	25.0	5	10	18.8/23.0	64.1/78.3	049	049	049	049
			CRHEATER415A00	32.0	5	10	24.0/29.4	82.0/100.3	049	049	049	049
			CRHEATER416A00	42.4	5	10	31.8/38.9	108.7/132.9	051	051	051	051
		HIGH	CRHEATER411A00	10.4	5	10	7.8/9.6	26.7/32.6	047	047	047	047
			CRHEATER412A00	16.0	5	10	12.0/14.7	41.0/50.1	047	049	049	049
			CRHEATER414A00	25.0	5	10	18.8/23.0	64.1/78.3	049	049	049	049
			CRHEATER415A00	32.0	5	10	24.0/29.4	82.0/100.3	049	049	049	049
			CRHEATER416A00	42.4	5	10	31.8/38.9	108.7/132.9	051	051	051	051
	460-3-60	STD/MED	CRHEATER420A00	15.0	5	10	13.8	47.0	047	047	047	047
			CRHEATER421A00	25.0	5	10	23.0	78.3	047	047	047	047
			CRHEATER422A00	33.0	5	10	30.3	103.4	047	047	047	047
			CRHEATER423A00	41.7	5	10	38.3	130.7	050	050	050	050
		HIGH	CRHEATER420A00	15.0	5	10	13.8	47.0	047	047	047	047
			CRHEATER421A00	25.0	5	10	23.0	78.3	047	047	047	047
			CRHEATER422A00	33.0	5	10	30.3	103.4	047	047	047	047
			CRHEATER423A00	41.7	5	10	38.3	130.7	050	050	050	050
	575-3-60	STD/MED	CRHEATER425A00	18.0	5	—	16.5	56.4	047	047	047	047
			CRHEATER427A00	36.0	5	—	33.1	112.8	047	047	047	047
		HIGH	CRHEATER425A00	18.0	5	—	16.5	56.4	047	047	047	047
			CRHEATER427A00	36.0	5	—	33.1	112.8	047	047	047	047

NOTE(S):

a. High SCCR (Short Circuit Current Rating) is not available on units with Humidi-MiZer system, powered convenience outlet, phase loss monitor, non-fused disconnect, or 575-v.

50FE-*09 Electric Heat Data — Without Non-fused Disconnect (cont)

50FE UNIT SIZE	NOM. V-Ph-Hz	IFM TYPE	ELECTRIC HEATER PART NUMBER	NOM (kW)	STD SCCR kA	HIGH SCCR kA[a]	APPLICATION (kW)	APPLICATION OUTPUT (MBH)	HSCCR SINGLE POINT OR JUNCTION KIT PART NUMBER CRSINGLEXXXA00			
									NO C.O. OR UNPOWERED C.O.		WITH PWRD C.O.	
									NO P.E.	WITH P.E. (pwrd fr/unit)	NO P.E	WITH P.E. (pwrd fr/unit)
50FE-M09	208/230-3-60	STD/ MED	CRHEATER411A00	10.4	5	10	7.8/9.6	26.7/32.6	067	067	067	067
			CRHEATER412A00	16.0	5	10	12.0/14.7	41.0/50.1	067	067	067	067
			CRHEATER414A00	25.0	5	10	18.8/23.0	64.1/78.3	068	068	068	068
			CRHEATER415A00	32.0	5	10	24.0/29.4	82.0/100.3	068	068	068	068
			CRHEATER416A00	42.4	5	10	31.8/38.9	108.7/132.9	069	069	069	069
		HIGH	CRHEATER411A00	10.4	5	10	7.8/9.6	26.7/32.6	067	067	067	067
			CRHEATER412A00	16.0	5	10	12.0/14.7	41.0/50.1	067	067	067	067
			CRHEATER414A00	25.0	5	10	18.8/23.0	64.1/78.3	068	068	068	068
			CRHEATER415A00	32.0	5	10	24.0/29.4	82.0/100.3	068	068	068	068
			CRHEATER416A00	42.4	5	10	31.8/38.9	108.7/132.9	069	069	069	069
	460-3-60	STD/ MED	CRHEATER420A00	15.0	5	10	13.8	47.0	067	067	067	067
			CRHEATER421A00	25.0	5	10	23.0	78.3	068	068	068	068
			CRHEATER422A00	33.0	5	10	30.3	103.4	068	068	068	068
			CRHEATER423A00	41.7	5	10	38.3	130.7	068	068	068	068
		HIGH	CRHEATER420A00	15.0	5	10	13.8	47.0	067	067	067	067
			CRHEATER421A00	25.0	5	10	23.0	78.3	068	068	068	068
			CRHEATER422A00	33.0	5	10	30.3	103.4	068	068	068	068
			CRHEATER423A00	41.7	5	10	38.3	130.7	068	068	068	068
	575-3-60	STD/ MED	CRHEATER425A00	18.0	5	—	16.5	56.4	067	067	067	067
			CRHEATER427A00	36.0	5	—	33.1	112.8	068	068	068	068
		HIGH	CRHEATER425A00	18.0	5	—	16.5	56.4	067	067	067	067
			CRHEATER427A00	36.0	5	—	33.1	112.8	068	068	068	068

NOTE(S):

a. High SCCR (Short Circuit Current Rating) is not available on units with Humidi-MiZer system, powered convenience outlet, phase loss monitor, non-fused disconnect, or 575-v.

50FE-*09 Electric Heat Data — With Non-fused Disconnect

50FE UNIT SIZE	NOM. V-Ph-Hz	IFM TYPE	ELECTRIC HEATER PART NUMBER	NOM (kW)	STD SCCR kA	APPLICATION (kW)	APPLICATION OUTPUT (MBH)	SINGLE POINT OR JUNCTION KIT PART NUMBER CRSINGLEXXXA00			
								NO C.O. OR UNPOWERED C.O.		WITH PWRD C.O.	
								NO P.E.	WITH P.E. (pwrd fr/unit)	NO P.E	WITH P.E. (pwrd fr/unit)
50FE-M09	208/230-3-60	STD/ MED	CRHEATER411A00	10.4	5	7.8/9.6	26.7/32.6	047	047	047	047
			CRHEATER412A00	16.0	5	12.0/14.7	41.0/50.1	047	049	049	049
			CRHEATER414A00	25.0	5	18.8/23.0	64.1/78.3	049	049	049	049
			CRHEATER415A00	32.0	5	24.0/29.4	82.0/100.3	049	049	049	049
			CRHEATER416A00	42.4	5	31.8/38.9	108.7/132.9	051	051	051	051
		HIGH	CRHEATER411A00	10.4	5	7.8/9.6	26.7/32.6	047	047	047	047
			CRHEATER412A00	16.0	5	12.0/14.7	41.0/50.1	047	049	049	049
			CRHEATER414A00	25.0	5	18.8/23.0	64.1/78.3	049	049	049	049
			CRHEATER415A00	32.0	5	24.0/29.4	82.0/100.3	049	049	049	049
			CRHEATER416A00	42.4	5	31.8/38.9	108.7/132.9	051	051	051	051
	460-3-60	STD/ MED	CRHEATER420A00	15.0	5	13.8	47.0	047	047	047	047
			CRHEATER421A00	25.0	5	23.0	78.3	047	047	047	047
			CRHEATER422A00	33.0	5	30.3	103.4	047	047	047	047
			CRHEATER423A00	41.7	5	38.3	130.7	050	050	050	050
		HIGH	CRHEATER420A00	15.0	5	13.8	47.0	047	047	047	047
			CRHEATER421A00	25.0	5	23.0	78.3	047	047	047	047
			CRHEATER422A00	33.0	5	30.3	103.4	047	047	047	047
			CRHEATER423A00	41.7	5	38.3	130.7	050	050	050	050
	575-3-60	STD/ MED	CRHEATER425A00	18.0	5	16.5	56.4	047	047	047	047
			CRHEATER427A00	36.0	5	33.1	112.8	047	047	047	047
		HIGH	CRHEATER425A00	18.0	5	16.5	56.4	047	047	047	047
			CRHEATER427A00	36.0	5	33.1	112.8	047	047	047	047

50FE-*12 Electric Heat Data — Without Non-fused Disconnect

50FE UNIT SIZE	NOM. V-Ph-Hz	IFM TYPE	ELECTRIC HEATER PART NUMBER	NOM (kW)	STD SCCR kA	HIGH SCCR kA[a]	APPLICATION (kW)	APPLICATION OUTPUT (MBH)	SINGLE POINT OR JUNCTION KIT PART NUMBER CRSINGLEXXXA00			
									NO C.O. OR UNPOWERED C.O.		WITH PWRD C.O.	
									NO P.E.	WITH P.E. (pwrd fr/unit)	NO P.E	WITH P.E. (pwrd fr/unit)
50FE-M12	208/230-3-60	STD/ MED	CRHEATER411A00	10.4	5	10	7.8/9.6	26.7/32.6	047	047	049	049
			CRHEATER412A00	16.0	5	10	12.0/14.7	41.0/50.1	047	049	049	049
			CRHEATER415A00	32.0	5	10	24.0/29.4	82.0/100.3	049	049	049	049
			CRHEATER416A00	42.4	5	10	31.8/38.9	108.7/132.9	051	051	051	051
			CRHEATER417A00	50.0	5	10	37.6/45.9	128.1/156.7	051	051	051	051
		HIGH	CRHEATER411A00	10.4	5	10	7.8/9.6	26.7/32.6	049	049	049	049
			CRHEATER412A00	16.0	5	10	12.0/14.7	41.0/50.1	049	049	049	049
			CRHEATER415A00	32.0	5	10	24.0/29.4	82.0/100.3	049	049	049	049
			CRHEATER416A00	42.4	5	10	31.8/38.9	108.7/132.9	051	051	051	051
			CRHEATER417A00	50.0	5	10	37.6/45.9	128.1/156.7	051	051	051	051
	460-3-60	STD/ MED	CRHEATER420A00	15.0	5	10	13.8	47.0	047	047	047	047
			CRHEATER422A00	33.0	5	10	30.3	103.4	047	047	047	047
			CRHEATER423A00	41.7	5	10	38.3	130.7	050	050	050	050
			CRHEATER424A00	50.0	5	10	45.9	156.7	050	050	050	050
		HIGH	CRHEATER420A00	15.0	5	10	13.8	47.0	047	047	047	047
			CRHEATER422A00	33.0	5	10	30.3	103.4	047	047	047	050
			CRHEATER423A00	41.7	5	10	38.3	130.7	050	050	050	050
			CRHEATER424A00	50.0	5	10	45.9	156.7	050	050	050	050
	575-3-60	STD/ MED	CRHEATER425A00	18.0	5	—	16.5	56.4	047	047	047	047
			CRHEATER427A00	36.0	5	—	33.1	112.8	047	047	047	047
			CRHEATER428A00	50.0	5	—	45.9	156.7	047	047	047	047
		HIGH	CRHEATER425A00	18.0	5	—	16.5	56.4	047	047	047	047
			CRHEATER427A00	36.0	5	—	33.1	112.8	047	047	047	047
			CRHEATER428A00	50.0	5	—	45.9	156.7	047	047	047	050

NOTE(S):

a. High SCCR (Short Circuit Current Rating) is not available on units with Humidi-MiZer system, powered convenience outlet, phase loss monitor, non-fused disconnect, or 575-v.

50FE-*12 Electric Heat Data — Without Non-fused Disconnect (cont)

50FE UNIT SIZE	NOM. V-Ph-Hz	IFM TYPE	ELECTRIC HEATER PART NUMBER	NOM (kW)	STD SCCR kA	HIGH SCCR kA[a]	APPLICATION (kW)	APPLICATION OUTPUT (MBH)	HSCCR SINGLE POINT OR JUNCTION KIT PART NUMBER CRSINGLEXXXA00			
									NO C.O. OR UNPOWERED C.O.		WITH PWRD C.O.	
									NO P.E.	WITH P.E. (pwrd fr/unit)	NO P.E	WITH P.E. (pwrd fr/unit)
50FE-M12	208/230-3-60	STD/MED	CRHEATER411A00	10.4	5	10	7.8/9.6	26.7/32.6	067	067	067	067
			CRHEATER412A00	16.0	5	10	12.0/14.7	41.0/50.1	067	067	067	067
			CRHEATER415A00	32.0	5	10	24.0/29.4	82.0/100.3	068	068	068	068
			CRHEATER416A00	42.4	5	10	31.8/38.9	108.7/132.9	069	069	069	069
			CRHEATER417A00	50.0	5	10	37.6/45.9	128.1/156.7	069	069	069	069
		HIGH	CRHEATER411A00	10.4	5	10	7.8/9.6	26.7/32.6	067	067	067	067
			CRHEATER412A00	16.0	5	10	12.0/14.7	41.0/50.1	067	067	067	067
			CRHEATER415A00	32.0	5	10	24.0/29.4	82.0/100.3	068	068	068	068
			CRHEATER416A00	42.4	5	T10	31.8/38.9	108.7/132.9	069	069	069	069
			CRHEATER417A00	50.0	5	10	37.6/45.9	128.1/156.7	069	069	069	069
	460-3-60	STD/MED	CRHEATER420A00	15.0	5	10	13.8	47.0	067	067	067	067
			CRHEATER422A00	33.0	5	10	30.3	103.4	068	068	068	068
			CRHEATER423A00	41.7	5	10	38.3	130.7	068	068	068	068
			CRHEATER424A00	50.0	5	10	45.9	156.7	068	068	068	068
		HIGH	CRHEATER420A00	15.0	5	10	13.8	47.0	067	067	067	067
			CRHEATER422A00	33.0	5	10	30.3	103.4	068	068	068	068
			CRHEATER423A00	41.7	5	10	38.3	130.7	068	068	068	068
			CRHEATER424A00	50.0	5	10	45.9	156.7	068	068	068	068
	575-3-60	STD/MED	CRHEATER425A00	18.0	5	—	16.5	56.4	067	067	067	067
			CRHEATER427A00	36.0	5	—	33.1	112.8	068	068	068	068
			CRHEATER428A00	50.0	5	—	45.9	156.7	068	068	068	068
		HIGH	CRHEATER425A00	18.0	5	—	16.5	56.4	067	067	067	067
			CRHEATER427A00	36.0	5	—	33.1	112.8	068	068	068	068
			CRHEATER428A00	50.0	5	—	45.9	156.7	068	068	068	068

NOTE(S):

a. High SCCR (Short Circuit Current Rating) is not available on units with Humidi-MiZer system, powered convenience outlet, phase loss monitor, non-fused disconnect, or 575-v.

Electrical data (cont)

50FE-*12 Electric Heat Data — With Non-fused Disconnect

50FE UNIT SIZE	NOM. V-Ph-Hz	IFM TYPE	ELECTRIC HEATER PART NUMBER	NOM (kW)	STD SCCR kA	APPLICATION (kW)	APPLICATION OUTPUT (MBH)	SINGLE POINT OR JUNCTION KIT PART NUMBER CRSINGLEXXXA00			
								NO C.O. OR UNPOWERED C.O.		WITH PWRD C.O.	
								NO P.E.	WITH P.E. (pwrd fr/unit)	NO P.E	WITH P.E. (pwrd fr/unit)
50FE-M12	208/230-3-60	STD/ MED	CRHEATER411A00	10.4	5	7.8/9.6	26.7/32.6	047	047	049	049
			CRHEATER412A00	16.0	5	12.0/14.7	41.0/50.1	047	049	049	049
			CRHEATER415A00	32.0	5	24.0/29.4	82.0/100.3	049	049	049	049
			CRHEATER416A00	42.4	5	31.8/38.9	108.7/132.9	051	051	051	051
			CRHEATER417A00	50.0	5	37.6/45.9	128.1/156.7	051	051	051	051
		HIGH	CRHEATER411A00	10.4	5	7.8/9.6	26.7/32.6	049	049	049	049
			CRHEATER412A00	16.0	5	12.0/14.7	41.0/50.1	049	049	049	049
			CRHEATER415A00	32.0	5	24.0/29.4	82.0/100.3	049	049	049	049
			CRHEATER416A00	42.4	5	31.8/38.9	108.7/132.9	051	051	051	051
			CRHEATER417A00	50.0	5	37.6/45.9	128.1/156.7	051	051	051	051
	460-3-60	STD/ MED	CRHEATER420A00	15.0	5	13.8	47.0	047	047	047	047
			CRHEATER422A00	33.0	5	30.3	103.4	047	047	047	047
			CRHEATER423A00	41.7	5	38.3	130.7	050	050	050	050
			CRHEATER424A00	50.0	5	45.9	156.7	050	050	050	050
		HIGH	CRHEATER420A00	15.0	5	13.8	47.0	047	047	047	047
			CRHEATER422A00	33.0	5	30.3	103.4	047	047	047	050
			CRHEATER423A00	41.7	5	38.3	130.7	050	050	050	050
			CRHEATER424A00	50.0	5	45.9	156.7	050	050	050	050
	575-3-60	STD/ MED	CRHEATER425A00	18.0	5	16.5	56.4	047	047	047	047
			CRHEATER427A00	36.0	5	33.1	112.8	047	047	047	047
			CRHEATER428A00	50.0	5	45.9	156.7	047	047	047	047
		HIGH	CRHEATER425A00	18.0	5	16.5	56.4	047	047	047	047
			CRHEATER427A00	36.0	5	33.1	112.8	047	047	047	047
			CRHEATER428A00	50.0	5	45.9	156.7	047	047	047	050

50FE-*14 Electric Heat Data — Without Non-fused Disconnect

50FE UNIT SIZE	NOM. V-Ph-Hz	IFM TYPE	ELECTRIC HEATER PART NUMBER	NOM (kW)	STD SCCR kA	HIGH SCCR kA[a]	APPLICATION (kW)	APPLICATION OUTPUT (MBH)	SINGLE POINT OR JUNCTION KIT PART NUMBER CRSINGLEXXXA00			
									NO C.O. OR UNPOWERED C.O.		WITH PWRD C.O.	
									NO P.E.	WITH P.E. (pwrd fr/unit)	NO P.E	WITH P.E. (pwrd fr/unit)
50FE-M14	208/230-3-60	STD/MED	CRHEATER411A00	10.4	5	—	7.8/9.6	26.7/32.6	049	049	049	049
			CRHEATER412A00	16.0	5	—	12.0/14.7	41.0/50.1	049	049	049	049
			CRHEATER415A00	32.0	5	—	24.0/29.4	82.0/100.3	049	049	049	049
			CRHEATER416A00	42.4	5	—	31.8/38.9	108.7/132.9	051	051	051	051
			CRHEATER417A00	50.0	5	—	37.6/45.9	128.1/156.7	051	051	051	051
		HIGH	CRHEATER411A00	10.4	5	—	7.8/9.6	26.7/32.6	049	049	049	049
			CRHEATER412A00	16.0	5	—	12.0/14.7	41.0/50.1	049	049	049	049
			CRHEATER415A00	32.0	5	—	24.0/29.4	82.0/100.3	049	049	049	049
			CRHEATER416A00	42.4	5	—	31.8/38.9	108.7/132.9	051	051	051	051
			CRHEATER417A00	50.0	5	—	37.6/45.9	128.1/156.7	051	051	051	051
	460-3-60	STD/MED	CRHEATER420A00	15.0	5	—	13.8	47.0	047	047	047	047
			CRHEATER422A00	33.0	5	—	30.3	103.4	047	047	047	047
			CRHEATER423A00	41.7	5	—	38.3	130.7	050	050	050	050
			CRHEATER424A00	50.0	5	—	45.9	156.7	050	050	050	050
		HIGH	CRHEATER420A00	15.0	5	—	13.8	47.0	047	047	047	047
			CRHEATER422A00	33.0	5	—	30.3	103.4	047	047	047	050
			CRHEATER423A00	41.7	5	—	38.3	130.7	050	050	050	050
			CRHEATER424A00	50.0	5	—	45.9	156.7	050	050	050	050
	575-3-60	STD/MED	CRHEATER425A00	18.0	5	—	16.5	56.4	047	047	047	047
			CRHEATER427A00	36.0	5	—	33.1	112.8	047	047	047	047
			CRHEATER428A00	50.0	5	—	45.9	156.7	047	047	047	047
		HIGH	CRHEATER425A00	18.0	5	—	16.5	56.4	047	047	047	047
			CRHEATER427A00	36.0	5	—	33.1	112.8	047	047	047	047
			CRHEATER428A00	50.0	5	—	45.9	156.7	047	047	047	050

NOTE(S):

a. High SCCR (Short Circuit Current Rating) is not available on units with Humidi-MiZer system, powered convenience outlet, phase loss monitor, non-fused disconnect, or 575-v.

50FE-*14 Electric Heat Data — Without Non-fused Disconnect (cont)

50FE UNIT SIZE	NOM. V-Ph-Hz	IFM TYPE	ELECTRIC HEATER PART NUMBER	NOM (kW)	STD SCCR kA	HIGH SCCR kA[a]	APPLICATION (kW)	APPLICATION OUTPUT (MBH)	HSCCR SINGLE POINT OR JUNCTION KIT PART NUMBER CRSINGLEXXXA00			
									NO C.O. OR UNPOWERED C.O.		WITH PWRD C.O.	
									NO P.E.	WITH P.E. (pwrd fr/unit)	NO P.E	WITH P.E. (pwrd fr/unit)
50FE-M14	208/230-3-60	STD/ MED	CRHEATER411A00	10.4	5	—	7.8/9.6	26.7/32.6	067	067	067	067
			CRHEATER412A00	16.0	5	—	12.0/14.7	41.0/50.1	067	067	067	067
			CRHEATER415A00	32.0	5	—	24.0/29.4	82.0/100.3	068	068	068	068
			CRHEATER416A00	42.4	5	—	31.8/38.9	108.7/132.9	069	069	069	069
			CRHEATER417A00	50.0	5	—	37.6/45.9	128.1/156.7	069	069	069	069
		HIGH	CRHEATER411A00	10.4	5	—	7.8/9.6	26.7/32.6	067	067	067	067
			CRHEATER412A00	16.0	5	—	12.0/14.7	41.0/50.1	067	067	067	067
			CRHEATER415A00	32.0	5	—	24.0/29.4	82.0/100.3	068	068	068	068
			CRHEATER416A00	42.4	5	—	31.8/38.9	108.7/132.9	069	069	069	069
			CRHEATER417A00	50.0	5	—	37.6/45.9	128.1/156.7	069	069	069	069
	460-3-60	STD/ MED	CRHEATER420A00	15.0	5	—	13.8	47.0	067	067	067	067
			CRHEATER422A00	33.0	5	—	30.3	103.4	068	068	068	068
			CRHEATER423A00	41.7	5	—	38.3	130.7	068	068	068	068
			CRHEATER424A00	50.0	5	—	45.9	156.7	068	068	068	068
		HIGH	CRHEATER420A00	15.0	5	—	13.8	47.0	067	067	067	067
			CRHEATER422A00	33.0	5	—	30.3	103.4	068	068	068	068
			CRHEATER423A00	41.7	5	—	38.3	130.7	068	068	068	068
			CRHEATER424A00	50.0	5	—	45.9	156.7	068	068	068	068
	575-3-60	STD/ MED	CRHEATER425A00	18.0	5	—	16.5	56.4	067	067	067	067
			CRHEATER427A00	36.0	5	—	33.1	112.8	068	068	068	068
			CRHEATER428A00	50.0	5	—	45.9	156.7	068	068	068	068
		HIGH	CRHEATER425A00	18.0	5	—	16.5	56.4	067	067	067	067
			CRHEATER427A00	36.0	5	—	33.1	112.8	068	068	068	068
			CRHEATER428A00	50.0	5	—	45.9	156.7	068	068	068	068

NOTE(S):

a. High SCCR (Short Circuit Current Rating) is not available on units with Humidi-MiZer system, powered convenience outlet, phase loss monitor, non-fused disconnect, or 575-v.

50FE-*14 Electric Heat Data — With Non-fused Disconnect

50FE UNIT SIZE	NOM. V-Ph-Hz	IFM TYPE	ELECTRIC HEATER PART NUMBER	NOM (kW)	STD SCCR kA	APPLICATION (kW)	APPLICATION OUTPUT (MBH)	SINGLE POINT OR JUNCTION KIT PART NUMBER CRSINGLEXXXA00			
								NO C.O. OR UNPOWERED C.O.		WITH PWRD C.O.	
								NO P.E.	WITH P.E. (pwrd fr/unit)	NO P.E	WITH P.E. (pwrd fr/unit)
50FE-M14	208/230-3-60	STD/ MED	CRHEATER411A00	10.4	5	7.8/9.6	26.7/32.6	049	049	049	049
			CRHEATER412A00	16.0	5	12.0/14.7	41.0/50.1	049	049	049	049
			CRHEATER415A00	32.0	5	24.0/29.4	82.0/100.3	049	049	049	049
			CRHEATER416A00	42.4	5	31.8/38.9	108.7/132.9	051	051	051	051
			CRHEATER417A00	50.0	5	37.6/45.9	128.1/156.7	051	051	051	051
		HIGH	CRHEATER411A00	10.4	5	7.8/9.6	26.7/32.6	049	049	049	049
			CRHEATER412A00	16.0	5	12.0/14.7	41.0/50.1	049	049	049	049
			CRHEATER415A00	32.0	5	24.0/29.4	82.0/100.3	049	049	049	049
			CRHEATER416A00	42.4	5	31.8/38.9	108.7/132.9	051	051	051	051
			CRHEATER417A00	50.0	5	37.6/45.9	128.1/156.7	051	051	051	051
	460-3-60	STD/ MED	CRHEATER420A00	15.0	5	13.8	47.0	047	047	047	047
			CRHEATER422A00	33.0	5	30.3	103.4	047	047	047	047
			CRHEATER423A00	41.7	5	38.3	130.7	050	050	050	050
			CRHEATER424A00	50.0	5	45.9	156.7	050	050	050	050
		HIGH	CRHEATER420A00	15.0	5	13.8	47.0	047	047	047	047
			CRHEATER422A00	33.0	5	30.3	103.4	047	047	047	050
			CRHEATER423A00	41.7	5	38.3	130.7	050	050	050	050
			CRHEATER424A00	50.0	5	45.9	156.7	050	050	050	050
	575-3-60	STD/ MED	CRHEATER425A00	18.0	5	16.5	56.4	047	047	047	047
			CRHEATER427A00	36.0	5	33.1	112.8	047	047	047	047
			CRHEATER428A00	50.0	5	45.9	156.7	047	047	047	047
		HIGH	CRHEATER425A00	18.0	5	16.5	56.4	047	047	047	047
			CRHEATER427A00	36.0	5	33.1	112.8	047	047	047	047
			CRHEATER428A00	50.0	5	45.9	156.7	047	047	047	050

50FE-*16 Electric Heat Data — Without Non-fused Disconnect

50FE UNIT SIZE	NOM. V-Ph-Hz	IFM TYPE	ELECTRIC HEATER PART NUMBER	NOM (kW)	STD SCCR kA	HIGH SCCR kA[a]	APPLICATION (kW)	APPLICATION OUTPUT (MBH)	SINGLE POINT OR JUNCTION KIT PART NUMBER CRSINGLEXXXA00			
									NO C.O. OR UNPOWERED C.O.		WITH PWRD C.O.	
									NO P.E.	WITH P.E. (pwrd fr/unit)	NO P.E	WITH P.E. (pwrd fr/unit)
50FE-M16	208/230-3-60	STD/ MED	CRHEATER412A00	16.0	5	10	12.0/14.7	41.0/50.1	049	049	049	049
			CRHEATER414A00	25.0	5	10	18.8/23.0	64.1/78.3	049	049	049	049
			CRHEATER415A00	32.0	5	10	24.0/29.4	82.0/100.3	049	049	049	049
			CRHEATER416A00	42.4	5	10	31.8/38.9	108.7/132.9	051	051	051	051
			CRHEATER417A00	50.0	5	10	37.6/45.9	128.1/156.7	051	051	051	051
			CRHEATER451A00	67.0	5	10	50.3/61.5	171.7/210.0	053	053	053	053
		HIGH	CRHEATER412A00	16.0	5	10	12.0/14.7	41.0/50.1	049	049	049	049
			CRHEATER414A00	25.0	5	10	18.8/23.0	64.1/78.3	049	049	049	049
			CRHEATER415A00	32.0	5	10	24.0/29.4	82.0/100.3	049	049	049	049
			CRHEATER416A00	42.4	5	10	31.8/38.9	108.7/132.9	051	051	051	051
			CRHEATER417A00	50.0	5	10	37.6/45.9	128.1/156.7	051	051	051	051
			CRHEATER451A00	67.0	5	10	50.3/61.5	171.7/210.0	053	053	053	053
	460-3-60	STD/ MED	CRHEATER420A00	15.0	5	10	13.8	47.0	—	—	—	—
			CRHEATER421A00	25.0	5	10	23.0	78.3	047	047	047	047
			CRHEATER422A00	33.0	5	10	30.3	103.4	047	047	047	047
			CRHEATER423A00	41.7	5	10	38.3	130.7	050	050	050	050
			CRHEATER424A00	50.0	5	10	45.9	156.7	050	050	050	050
			CRHEATER452A00	67.0	5	10	61.5	210.0	052	052	052	052
		HIGH	CRHEATER420A00	15.0	5	10	13.8	47.0	—	—	—	—
			CRHEATER421A00	25.0	5	10	23.0	78.3	047	047	047	047
			CRHEATER422A00	33.0	5	10	30.3	103.4	047	047	047	050
			CRHEATER423A00	41.7	5	10	38.3	130.7	050	050	050	050
			CRHEATER424A00	50.0	5	10	45.9	156.7	050	050	050	050
			CRHEATER452A00	67.0	5	10	61.5	210.0	052	052	052	052
	575-3-60	STD/ MED	CRHEATER425A00	18.0	5	—	16.5	56.4	—	—	—	—
			CRHEATER427A00	36.0	5	—	33.1	112.8	047	047	047	047
			CRHEATER428A00	50.0	5	—	45.9	156.7	047	047	047	047
			CRHEATER453A00	67.0	5	—	61.5	210.0	052	052	052	052
		HIGH	CRHEATER425A00	18.0	5	—	16.5	56.4	—	—	—	—
			CRHEATER427A00	36.0	5	—	33.1	112.8	047	047	047	047
			CRHEATER428A00	50.0	5	—	45.9	156.7	047	047	047	050
			CRHEATER453A00	67.0	5	—	61.5	210.0	052	052	052	052

NOTE(S):

a. High SCCR (Short Circuit Current Rating) is not available on units with Humidi-MiZer system, powered convenience outlet, phase loss monitor, non-fused disconnect, or 575-v.

50FE-*16 Electric Heat Data — Without Non-fused Disconnect (cont)

50FE UNIT SIZE	NOM. V-Ph-Hz	IFM TYPE	ELECTRIC HEATER PART NUMBER	NOM (kW)	STD SCCR kA	HIGH SCCR kA[a]	APPLICATION (kW)	APPLICATION OUTPUT (MBH)	HSCCR SINGLE POINT OR JUNCTION KIT PART NUMBER CRSINGLEXXXA00			
									NO C.O. OR UNPOWERED C.O.		WITH PWRD C.O.	
									NO P.E.	WITH P.E. (pwrd fr/unit)	NO P.E	WITH P.E. (pwrd fr/unit)
50FE-M16	208/230-3-60	STD/MED	CRHEATER412A00	16.0	5	10	12.0/14.7	41.0/50.1	067	067	067	067
			CRHEATER414A00	25.0	5	10	18.8/23.0	64.1/78.3	068	068	068	068
			CRHEATER415A00	32.0	5	10	24.0/29.4	82.0/100.3	068	068	068	068
			CRHEATER416A00	42.4	5	10	31.8/38.9	108.7/132.9	069	069	069	069
			CRHEATER417A00	50.0	5	10	37.6/45.9	128.1/156.7	069	069	069	069
			CRHEATER451A00	67.0	5	10	50.3/61.5	171.7/210.0	070	070	070	070
		HIGH	CRHEATER412A00	16.0	5	10	12.0/14.7	41.0/50.1	067	067	067	067
			CRHEATER414A00	25.0	5	10	18.8/23.0	64.1/78.3	068	068	068	068
			CRHEATER415A00	32.0	5	10	24.0/29.4	82.0/100.3	068	068	068	068
			CRHEATER416A00	42.4	5	10	31.8/38.9	108.7/132.9	069	069	069	069
			CRHEATER417A00	50.0	5	10	37.6/45.9	128.1/156.7	069	069	069	069
			CRHEATER451A00	67.0	5	10	50.3/61.5	171.7/210.0	070	070	070	070
	460-3-60	STD/MED	CRHEATER420A00	15.0	5	10	13.8	47.0	067	067	067	067
			CRHEATER421A00	25.0	5	10	23.0	78.3	068	068	068	068
			CRHEATER422A00	33.0	5	10	30.3	103.4	068	068	068	068
			CRHEATER423A00	41.7	5	10	38.3	130.7	068	068	068	068
			CRHEATER424A00	50.0	5	10	45.9	156.7	068	068	068	068
			CRHEATER452A00	67.0	5	10	61.5	210.0	069	069	069	069
		HIGH	CRHEATER420A00	15.0	5	10	13.8	47.0	067	067	067	067
			CRHEATER421A00	25.0	5	10	23.0	78.3	068	068	068	068
			CRHEATER422A00	33.0	5	10	30.3	103.4	068	068	068	068
			CRHEATER423A00	41.7	5	10	38.3	130.7	068	068	068	068
			CRHEATER424A00	50.0	5	10	45.9	156.7	068	068	068	068
			CRHEATER452A00	67.0	5	10	61.5	210.0	069	069	069	069
	575-3-60	STD/MED	CRHEATER425A00	18.0	5	—	16.5	56.4	067	067	067	067
			CRHEATER427A00	36.0	5	—	33.1	112.8	068	068	068	068
			CRHEATER428A00	50.0	5	—	45.9	156.7	068	068	068	068
			CRHEATER453A00	67.0	5	—	61.5	210.0	069	069	069	069
		HIGH	CRHEATER425A00	18.0	5	—	16.5	56.4	067	067	067	067
			CRHEATER427A00	36.0	5	—	33.1	112.8	068	068	068	068
			CRHEATER428A00	50.0	5	—	45.9	156.7	068	068	068	068
			CRHEATER453A00	67.0	5	—	61.5	210.0	069	069	069	069

NOTE(S):

a. High SCCR (Short Circuit Current Rating) is not available on units with Humidi-MiZer system, powered convenience outlet, phase loss monitor, non-fused disconnect, or 575-v.

50FE-*16 Electric Heat Data — With Non-fused Disconnect

50FE UNIT SIZE	NOM. V-Ph-Hz	IFM TYPE	ELECTRIC HEATER PART NUMBER	NOM (kW)	STD SCCR kA	APPLICATION (kW)	APPLICATION OUTPUT (MBH)	SINGLE POINT OR JUNCTION KIT PART NUMBER CRSINGLEXXXA00			
								NO C.O. OR UNPOWERED C.O.		WITH PWRD C.O.	
								NO P.E.	WITH P.E. (pwrd fr/unit)	NO P.E	WITH P.E. (pwrd fr/unit)
50FE-M16	208/230-3-60	STD/ MED	CRHEATER412A00	16.0	5	12.0/14.7	41.0/50.1	049	049	049	049
			CRHEATER414A00	25.0	5	18.8/23.0	64.1/78.3	049	049	049	049
			CRHEATER415A00	32.0	5	24.0/29.4	82.0/100.3	049	049	049	049
			CRHEATER416A00	42.4	5	31.8/38.9	108.7/132.9	051	051	051	051
			CRHEATER417A00	50.0	5	37.6/45.9	128.1/156.7	051	051	051	051
			CRHEATER451A00	67.0	5	50.3/61.5	171.7/210.0	053	053	053	053
		HIGH	CRHEATER412A00	16.0	5	12.0/14.7	41.0/50.1	049	049	049	049
			CRHEATER414A00	25.0	5	18.8/23.0	64.1/78.3	049	049	049	049
			CRHEATER415A00	32.0	5	24.0/29.4	82.0/100.3	049	049	049	049
			CRHEATER416A00	42.4	5	31.8/38.9	108.7/132.9	051	051	051	051
			CRHEATER417A00	50.0	5	37.6/45.9	128.1/156.7	051	051	051	051
			CRHEATER451A00	67.0	5	50.3/61.5	171.7/210.0	053	053	053	053
	460-3-60	STD/ MED	CRHEATER420A00	15.0	5	13.8	47.0	—	—	—	—
			CRHEATER421A00	25.0	5	23.0	78.3	047	047	047	047
			CRHEATER422A00	33.0	5	30.3	103.4	047	047	047	047
			CRHEATER423A00	41.7	5	38.3	130.7	050	050	050	050
			CRHEATER424A00	50.0	5	45.9	156.7	050	050	050	050
			CRHEATER452A00	67.0	5	61.5	210.0	052	052	052	052
		HIGH	CRHEATER420A00	15.0	5	13.8	47.0	—	—	—	—
			CRHEATER421A00	25.0	5	23.0	78.3	047	047	047	047
			CRHEATER422A00	33.0	5	30.3	103.4	047	047	047	050
			CRHEATER423A00	41.7	5	38.3	130.7	050	050	050	050
			CRHEATER424A00	50.0	5	45.9	156.7	050	050	050	050
			CRHEATER452A00	67.0	5	61.5	210.0	052	052	052	052
	575-3-60	STD/ MED	CRHEATER425A00	18.0	5	16.5	56.4	—	—	—	—
			CRHEATER427A00	36.0	5	33.1	112.8	047	047	047	047
			CRHEATER428A00	50.0	5	45.9	156.7	047	047	047	047
			CRHEATER453A00	67.0	5	61.5	210.0	052	052	052	052
		HIGH	CRHEATER425A00	18.0	5	16.5	56.4	—	—	—	—
			CRHEATER427A00	36.0	5	33.1	112.8	047	047	047	047
			CRHEATER428A00	50.0	5	45.9	156.7	047	047	047	050
			CRHEATER453A00	67.0	5	61.5	210.0	052	052	052	052

Typical Control Wiring Diagram — 48FE 08-12 230/460/575-3-60 Unit with Electromechanical Controller and POL224 Economizer

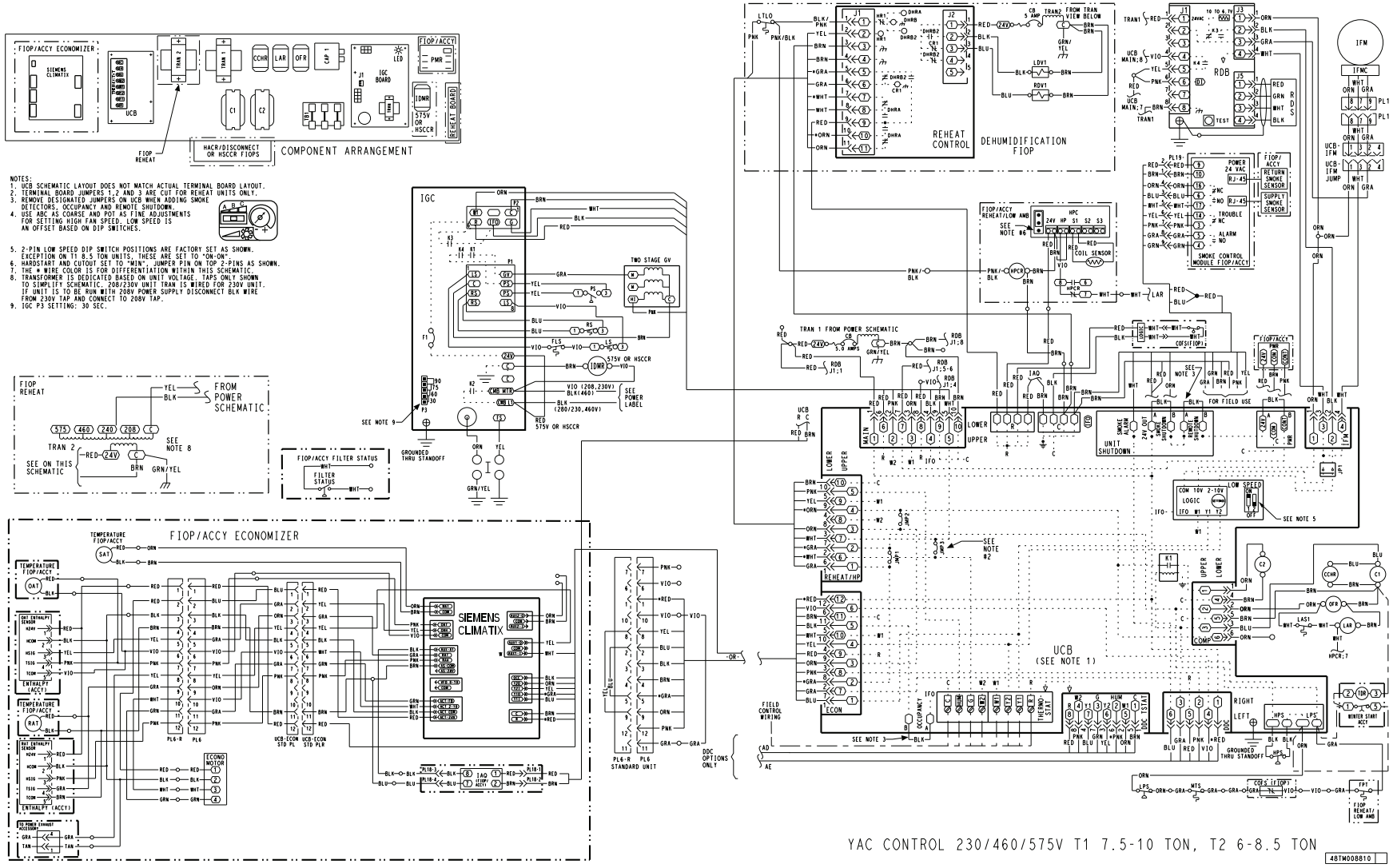

Typical Control Wiring Diagram — 48FE 08-12 230/460/575-3-60 Unit with SystemVu™ Controller

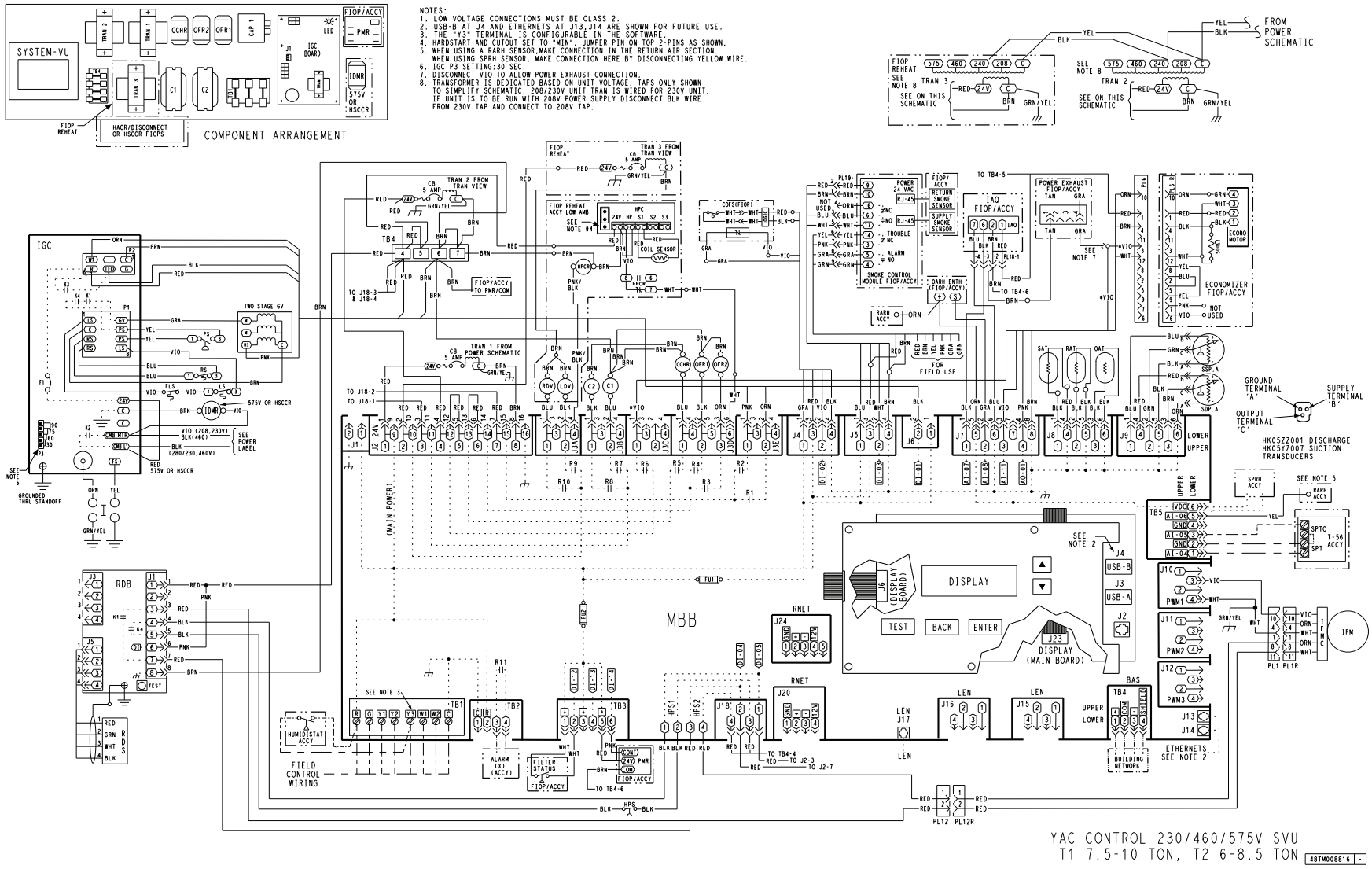

Typical Power Wiring Diagram — 48FE 08-12 230/460-3-60 Unit with Electromechanical Controller

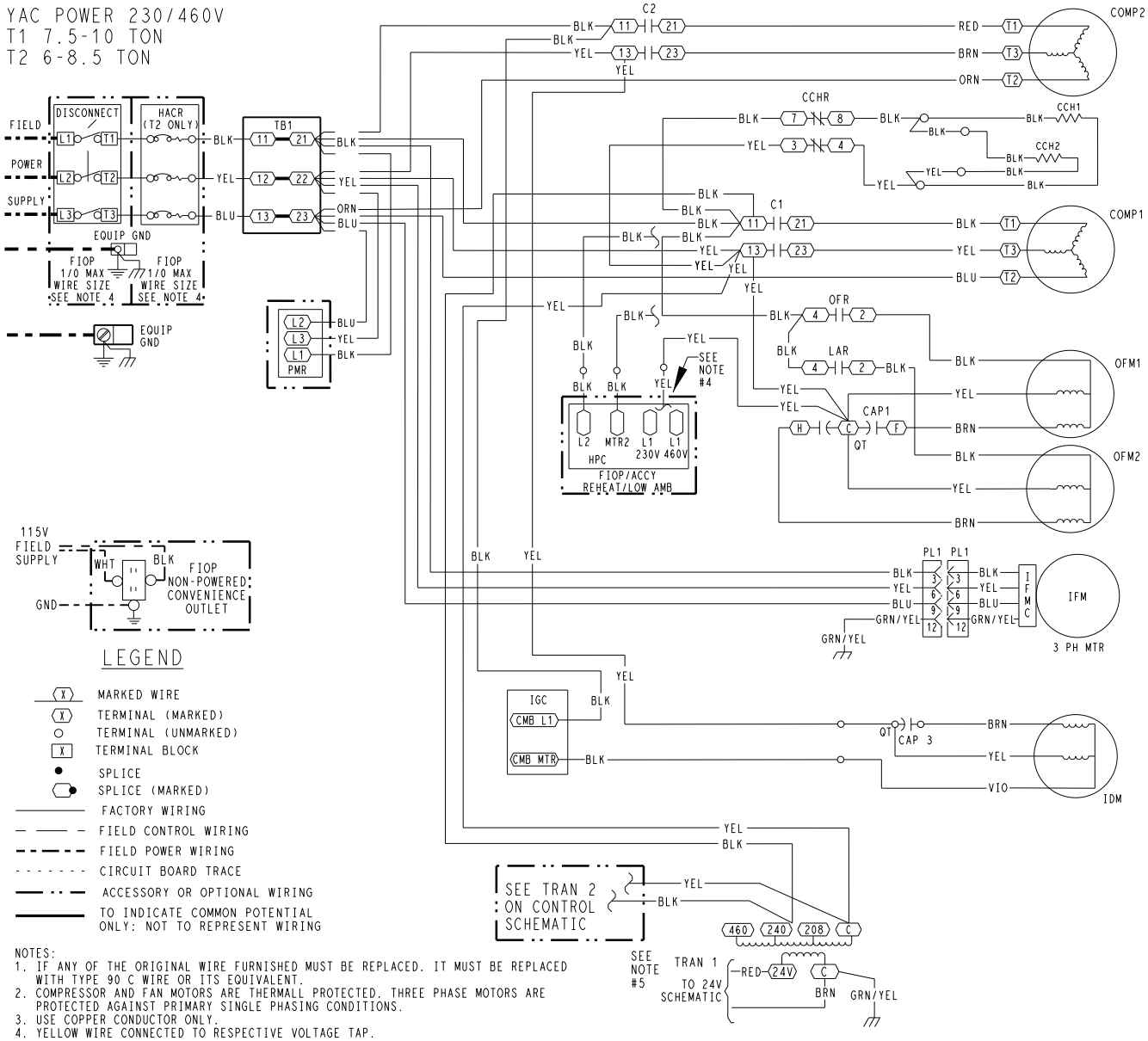

NOTES:
1. IF ANY OF THE ORIGINAL WIRE FURNISHED MUST BE REPLACED. IT MUST BE REPLACED WITH TYPE 90 C WIRE OR ITS EQUIVALENT.
2. COMPRESSOR AND FAN MOTORS ARE THERMALL PROTECTED. THREE PHASE MOTORS ARE PROTECTED AGAINST PRIMARY SINGLE PHASING CONDITIONS.
3. USE COPPER CONDUCTOR ONLY.
4. YELLOW WIRE CONNECTED TO RESPECTIVE VOLTAGE TAP.
5. TRANSFORMER IS DEDICATED BASED ON UNIT VOLTAGE. TAPS ONLY SHOWN TO SIMPLIFY SCHEMATIC. 208/230V UNIT TRAN IS WIRED FOR 230V UNIT. IF UNIT IS TO BE RUN WITH 208V POWER SUPPLY DISCONNECT BLK WIRE FROM 230V TAP AND CONNECT TO 208V TAP.

ACCY	ACCESSORY
AMB	AMBIENT
C	CONTACTOR,COMPRESSOR
CAP	CAPACITOR
CB	CIRCUIT BREAKER
CCH	CRANKCASE HEATER
CCHR	CRANKCASE HEATER RELAY
CMB	COMBUSTION
COFS	CONDENSATE OVERFLOW SWT
COMP	COMPRESSOR MOTOR
DDC	DIRECT DIGITAL CONTROL
ERV	ENERGY RECOVERY VENTILATOR
FIOP	FACTORY INSTALLED OPTION
FLS	FAN LIMIT SWITCH
FPT	FREEZE PROTECTION THERMOSTAT
FSD	FIRE SHUT DOWN
FS	FLAME SENSOR
FU	FUSE
GND	GROUND
GVR	GAS VALVE RELAY
HPC	HEAD PRESSURE CONTROL
HPS	HIGH PRESSURE SWITCH
HS	HALL EFFECT SENSOR
I	IGNITOR
IAQ	INDOOR AIR QUALITY SENSORS
IDM	INDUCED DRAFT MOTOR
IFCB	INDOOR FAN CIRCUIT BREAKER
IFM	INDOOR FAN MOTOR
IFMC	INDOOR FAN CONTROLLER
IGC	INTEGRATED GAS CONTROL
JMP	JUMPER
LA	LOW AMBIENT
LAR	LOW AMBIENT RELAY
LDV	LIQUID DIVERTER VALVE
LPS	LOW PRESSURE SWITCH
LSM	LIMIT SWITCH (MANUAL RESET)
LS	LIMIT SWITCH
LTLO	LOW TEMPERATURE LOCKOUT
MGV	MAIN GAS VALVE
MOV	VOLTAGE RESTRICTOR
MTR	MOTOR
MTS	MIXED AIR TEMPERATURE SWITCH
OAQ	OUTDOOR AIR QUALITY
OARH	OUTSIDE AIR RELATIVE HUMIDITY
OAT	OUTDOOR AIR TEMP. SENSOR
OFM	OUTDOOR FAN MOTOR
OFR	OUTDOOR FAN RELAY
OL	OVERLOAD
PL	PLUG ASSEMBLY
POT	POTENTIOMETER
PMR	PHASE MONITOR RELAY
QT	QUADRUPLE TERMINAL
RARH	RETURN AIR RELATIVE HUMIDITY
RAT	RETURN AIR TEMP. SENSOR
RDB	REFRIGERANT DISSIPATION BOARD
RDS	REFRIGERANT DISSIPATION SENSOR
RDV	REHEAT DISCHARGE VALVE
RS	ROLLOUT SWITCH
SAT	SUPPLY AIR TEMP. SENSOR
SEN	SENSOR
SPRH	SPACE RELATIVE HUMIDITY
SPT	SPACE TEMPERATURE SENSOR
SPTO	SPACE TEMPERATURE OFFSET
STD	STANDARD
TB	TERMINAL BLOCK
TDR	TIME DELAY RELAY(WINTER START)
TRAN	TRANSFORMER
UCB	UNIT CONTROL BOARD

48TM005719 F

Typical Power Wiring Diagram — 48FE 08-12 230/460-3-60 Unit with SystemVu™ Controller

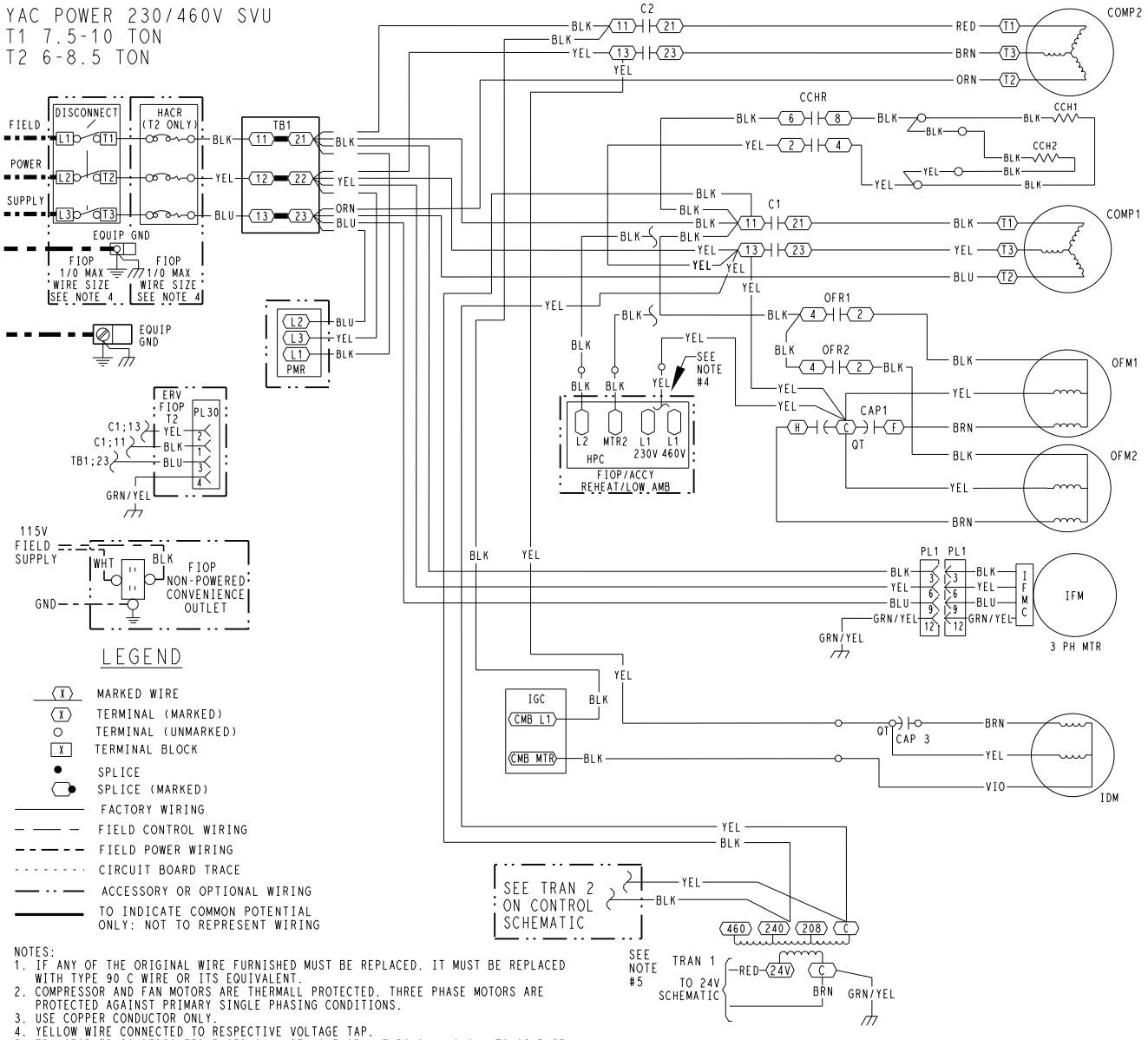

LEGEND

- MARKED WIRE
- TERMINAL (MARKED)
- TERMINAL (UNMARKED)
- TERMINAL BLOCK
- SPLICE
- SPLICE (MARKED)
- FACTORY WIRING
- FIELD CONTROL WIRING
- FIELD POWER WIRING
- CIRCUIT BOARD TRACE
- ACCESSORY OR OPTIONAL WIRING
- TO INDICATE COMMON POTENTIAL ONLY: NOT TO REPRESENT WIRING

NOTES:
1. IF ANY OF THE ORIGINAL WIRE FURNISHED MUST BE REPLACED. IT MUST BE REPLACED WITH TYPE 90 C WIRE OR ITS EQUIVALENT.
2. COMPRESSOR AND FAN MOTORS ARE THERMALLY PROTECTED. THREE PHASE MOTORS ARE PROTECTED AGAINST PRIMARY SINGLE PHASING CONDITIONS.
3. USE COPPER CONDUCTOR ONLY.
4. YELLOW WIRE CONNECTED TO RESPECTIVE VOLTAGE TAP.
5. TRANSFORMER IS DEDICATED BASED ON UNIT VOLTAGE. TAPS ONLY SHOWN TO SIMPLIFY SCHEMATIC. 208/230V UNIT TRAN IS WIRED FOR 230V UNIT. IF UNIT IS TO BE RUN WITH 208V POWER SUPPLY DISCONNECT BLK WIRE FROM 230V TAP AND CONNECT TO 208V TAP.

ACCY	ACCESSORY
AMB	AMBIENT
C	CONTACTOR,COMPRESSOR
CAP	CAPACITOR
CB	CIRCUIT BREAKER
CCH	CRANKCASE HEATER
CCHR	CRANKCASE HEATER RELAY
CMB	COMBUSTION
COFS	CONDENSATE OVERFLOW SWT
COMP	COMPRESSOR MOTOR
DDC	DIRECT DIGITAL CONTROL
ERV	ENERGY RECOVERY VENTILATOR
FIOP	FACTORY INSTALLED OPTION
FLS	FAN LIMIT SWITCH
FPT	FREEZE PROTECTION THERMOSTAT
FSD	FIRE SHUT DOWN
FS	FLAME SENSOR
FU	FUSE
GND	GROUND
GVR	GAS VALVE RELAY
HPC	HEAD PRESSURE CONTROL
HPS	HIGH PRESSURE SWITCH
HS	HALL EFFECT SENSOR
I	IGNITOR
IAQ	INDOOR AIR QUALITY SENSORS
IDM	INDUCED DRAFT MOTOR
IFCB	INDOOR FAN CIRCUIT BREAKER
IFM	INDOOR FAN MOTOR
IFMC	INDOOR FAN CONTROLLER
IGC	INTEGRATED GAS CONTROL
JMP	JUMPER
LA	LOW AMBIENT
LDV	LIQUID DIVERTER VALVE
LPS	LOW PRESSURE SWITCH
LSM	LIMIT SWITCH (MANUAL RESET)
LS	LIMIT SWITCH
LTLO	LOW TEMPERATURE LOCKOUT
MGV	MAIN GAS VALVE
MOV	VOLTAGE RESTRICTOR
MTR	MOTOR
MTS	MIXED AIR TEMPERATURE SWITCH
OAQ	OUTDOOR AIR QUALITY
OARH	OUTSIDE AIR RELATIVE HUMIDITY
OAT	OUTDOOR AIR TEMP. SENSOR
OFM	OUTDOOR FAN MOTOR
OFR	OUTDOOR FAN RELAY
OL	OVERLOAD
PL	PLUG ASSEMBLY
POT	POTENTIOMETER
PMR	PHASE MONITOR RELAY
QT	QUADRUPLE TERMINAL
RARH	RETURN AIR RELATIVE HUMIDITY
RAT	RETURN AIR TEMP. SENSOR
RDB	REFRIGERANT DISSIPATION BOARD
RDS	REFRIGERANT DISSIPATION SENSOR
RDV	REHEAT DISCHARGE VALVE
RS	ROLLOUT SWITCH
SAT	SUPPLY AIR TEMP. SENSOR
SEN	SENSOR
SPRH	SPACE RELATIVE HUMIDITY
SPT	SPACE TEMPERATURE SENSOR
SPTO	SPACE TEMPERATURE OFFSET
STD	STANDARD
TB	TERMINAL BLOCK
TDR	TIME DELAY RELAY(WINTER START)
TRAN	TRANSFORMER
UCB	UNIT CONTROL BOARD

48TM008212 C

Typical Control Wiring Diagram — 48FE 14 230/460/575-3-60 Unit with Electromechanical Controller and POL224 Economizer

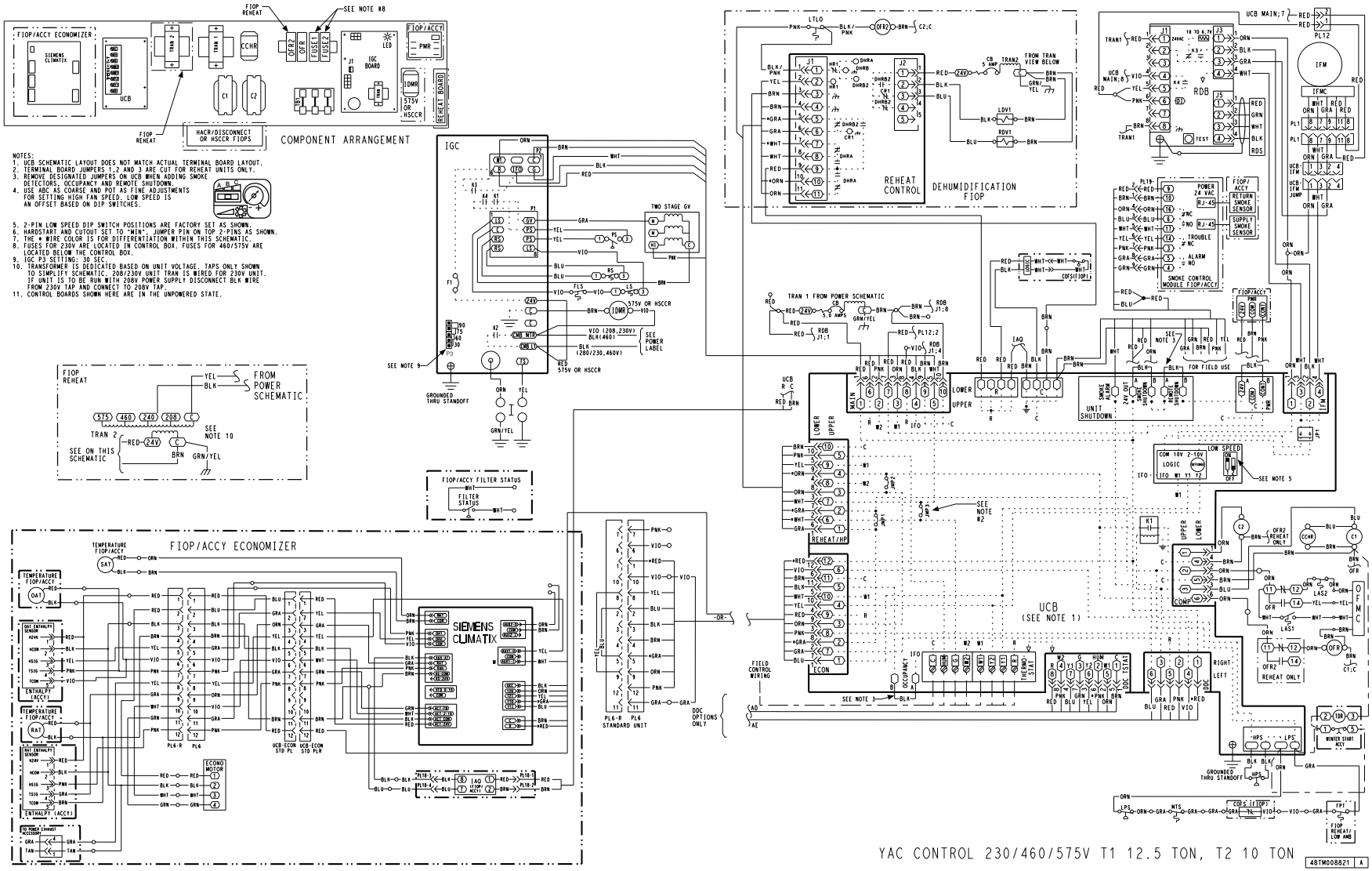

Typical Control Wiring Diagram — 48FE 14 230/460/575-3-60 Unit with SystemVu™ Controller

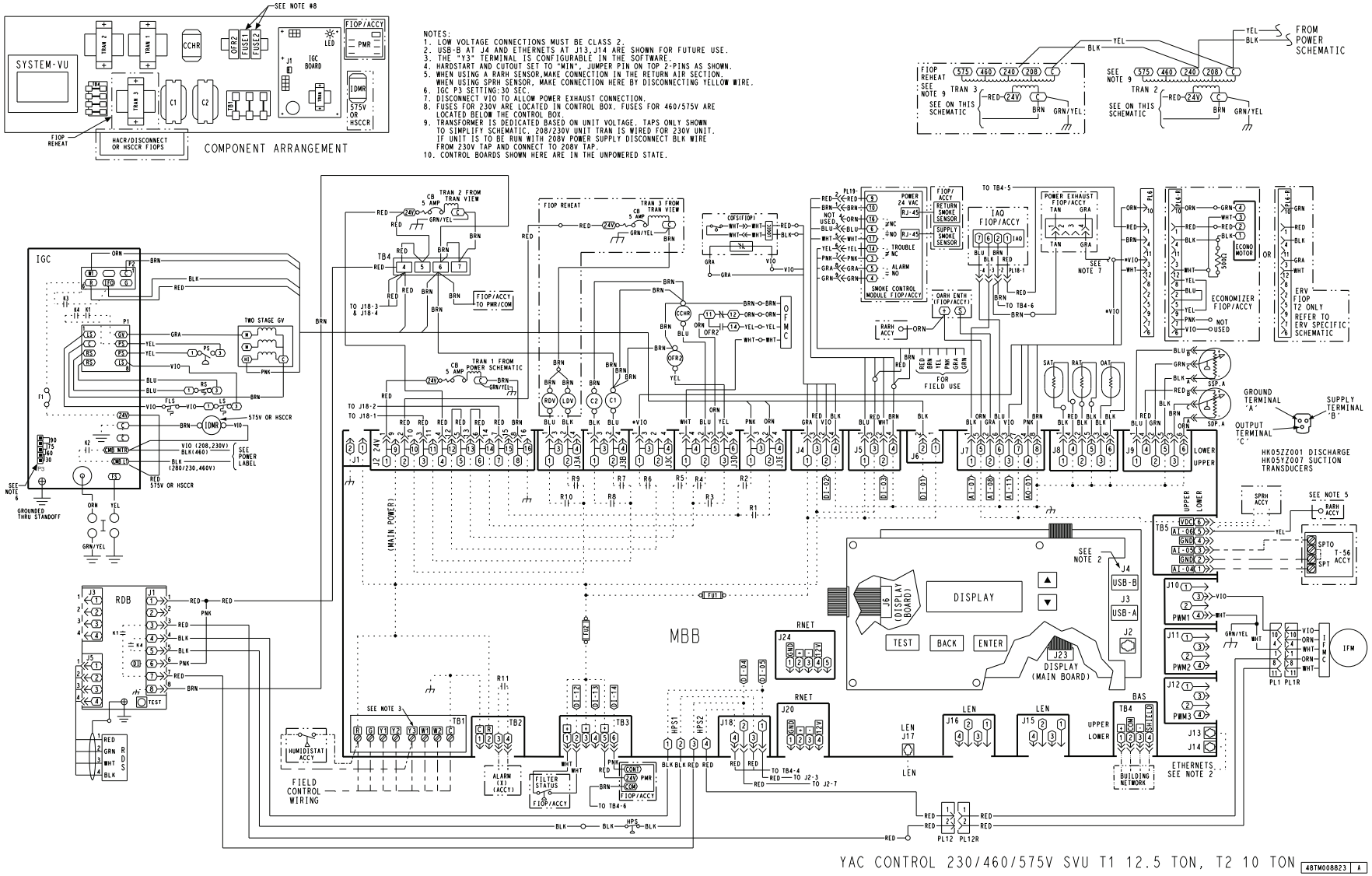

Typical Power Wiring Diagram — 48FE 14 208/230/460-3-60 Unit Electromechanical and SystemVu Controllers

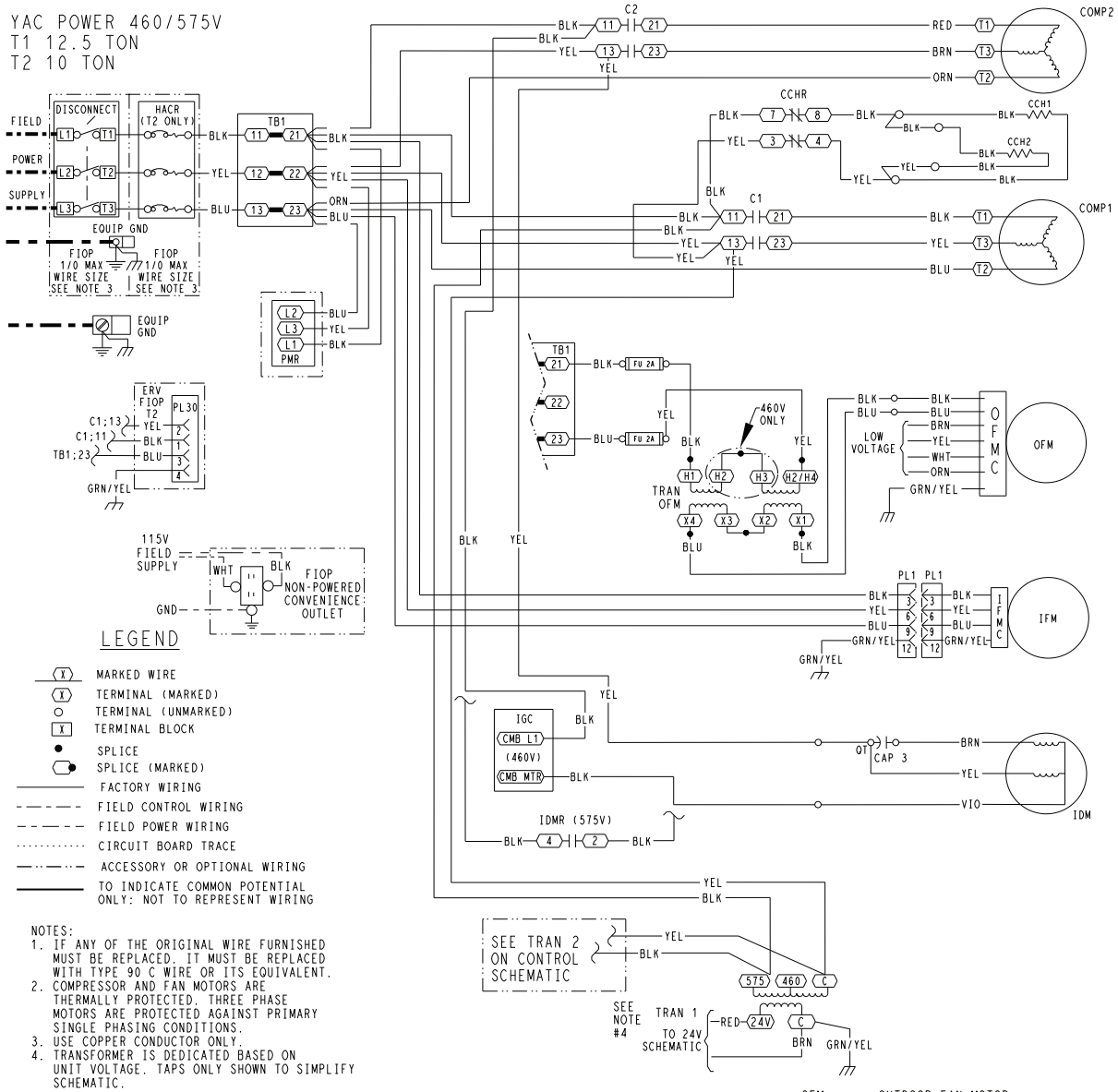

LEGEND

- MARKED WIRE
- TERMINAL (MARKED)
- TERMINAL (UNMARKED)
- TERMINAL BLOCK
- SPLICE
- SPLICE (MARKED)
- FACTORY WIRING
- FIELD CONTROL WIRING
- FIELD POWER WIRING
- CIRCUIT BOARD TRACE
- ACCESSORY OR OPTIONAL WIRING
- TO INDICATE COMMON POTENTIAL ONLY: NOT TO REPRESENT WIRING

NOTES:
1. IF ANY OF THE ORIGINAL WIRE FURNISHED MUST BE REPLACED, IT MUST BE REPLACED WITH TYPE 90 C WIRE OR ITS EQUIVALENT.
2. COMPRESSOR AND FAN MOTORS ARE THERMALLY PROTECTED. THREE PHASE MOTORS ARE PROTECTED AGAINST PRIMARY SINGLE PHASING CONDITIONS.
3. USE COPPER CONDUCTOR ONLY.
4. TRANSFORMER IS DEDICATED BASED ON UNIT VOLTAGE. TAPS ONLY SHOWN TO SIMPLIFY SCHEMATIC.

ACCY	ACCESSORY
AMB	AMBIENT
C	CONTACTOR,COMPRESSOR
CAP	CAPACITOR
CB	CIRCUIT BREAKER
CCH	CRANKCASE HEATER
CCHR	CRANKCASE HEATER RELAY
CMB	COMBUSTION
COFS	CONDENSATE OVERFLOW SWT
COMP	COMPRESSOR MOTOR
DDC	DIRECT DIGITAL CONTROL
ERV	ENERGY RECOVERY VENTILATOR
FIOP	FACTORY INSTALLED OPTION
FLS	FAN LIMIT SWITCH
FPT	FREEZE PROTECTION THERMOSTAT
FSD	FIRE SHUT DOWN
FS	FLAME SENSOR
FU	FUSE
GND	GROUND
GVR	GAS VALVE RELAY
HPC	HEAD PRESSURE CONTROL
HPS	HIGH PRESSURE SWITCH
HS	HALL EFFECT SENSOR
I	IGNITOR
IAQ	INDOOR AIR QUALITY SENSORS
IDM	INDUCED DRAFT MOTOR
IFCB	INDOOR FAN CIRCUIT BREAKER
IFM	INDOOR FAN MOTOR
IFMC	INDOOR FAN CONTROLLER
IGC	INTEGRATED GAS CONTROL
JMP	JUMPER
LA	LOW AMBIENT
LDV	LIQUID DIVERTER VALVE
LPS	LOW PRESSURE SWITCH
LSM	LIMIT SWITCH (MANUAL RESET)
LS	LIMIT SWITCH
LTLO	LOW TEMPERATURE LOCKOUT
MGV	MAIN GAS VALVE
MOV	VOLTAGE RESTRICTOR
MTR	MOTOR
MTS	MIXED AIR TEMPERATURE SWITCH
OAQ	OUTDOOR AIR QUALITY
OARH	OUTSIDE AIR RELATIVE HUMIDITY
OAT	OUTDOOR AIR TEMP. SENSOR
OFM	OUTDOOR FAN MOTOR
OFR	OUTDOOR FAN RELAY
OL	OVERLOAD
PL	PLUG ASSEMBLY
POT	POTENTIOMETER
PMR	PHASE MONITOR RELAY
QT	QUADRUPLE TERMINAL
RARH	RETURN AIR RELATIVE HUMIDITY
RAT	RETURN AIR TEMP. SENSOR
RDB	REFRIGERANT DISSIPATION BOARD
RDS	REFRIGERANT DISSIPATION SENSOR
RDV	REHEAT DISCHARGE VALVE
RS	ROLLOUT SWITCH
SAT	SUPPLY AIR TEMP. SENSOR
SEN	SENSOR
SPRH	SPACE RELATIVE HUMIDITY
SPT	SPACE TEMPERATURE SENSOR
SPTO	SPACE TEMPERATURE OFFSET
STD	STANDARD
TB	TERMINAL BLOCK
TDR	TIME DELAY RELAY(WINTER START)
TRAN	TRANSFORMER
UCB	UNIT CONTROL BOARD

48TM005990 | E

Typical Control Wiring Diagram — 48FE 16 230/460/575-3-60 Unit with Electromechanical Controller

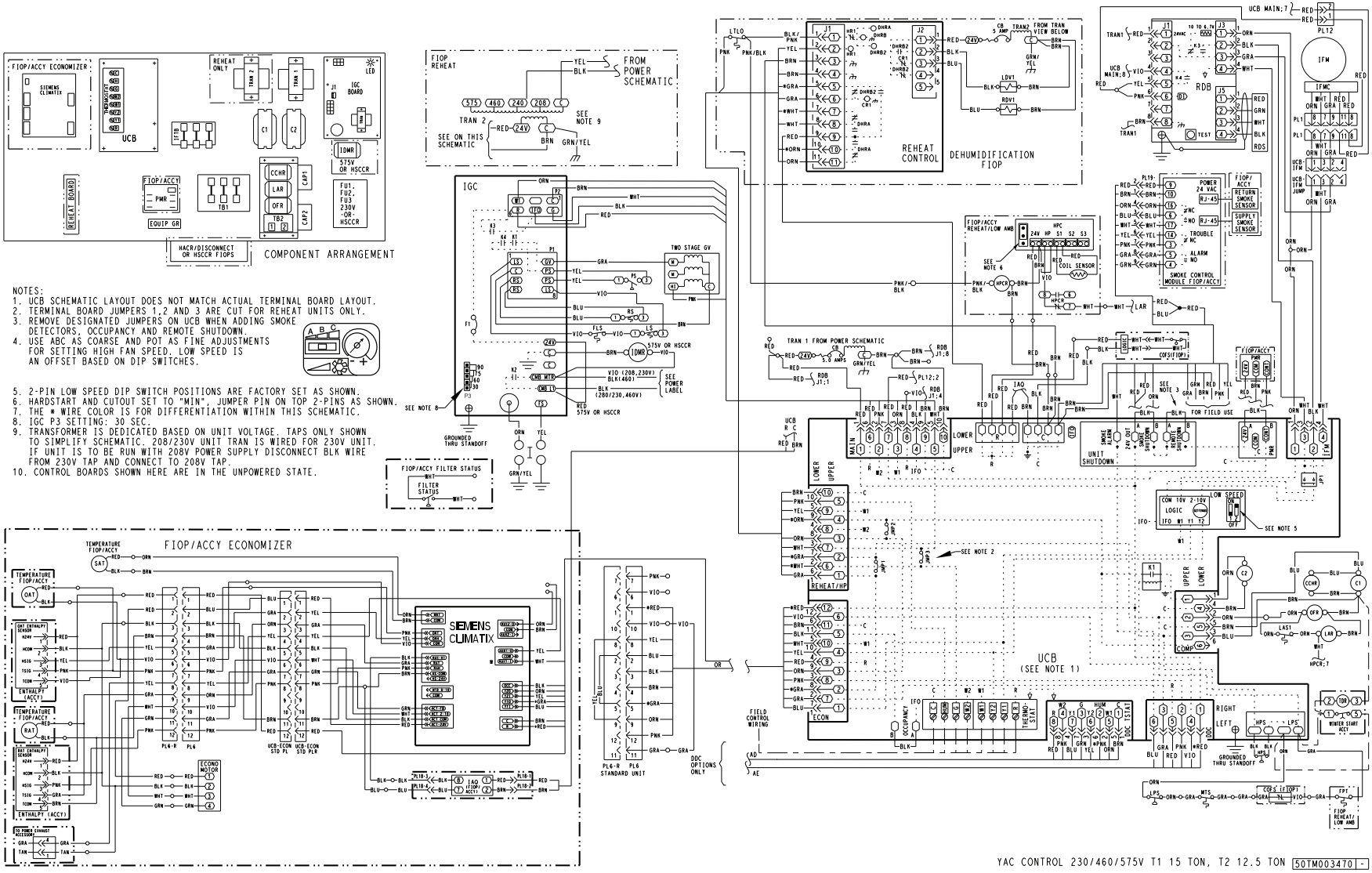

Typical Control Wiring Diagram — 48FE 16 230/460/575-3-60 Unit with SystemVu™ Controller

NOTES:
1. LOW VOLTAGE CONNECTIONS MUST BE CLASS 2.
2. USB-B AT J4 AND ETHERNETS AT J13,J14 ARE SHOWN FOR FUTURE USE.
3. THE "Y3" TERMINAL IS CONFIGURABLE IN THE SOFTWARE.
4. HARDSTART AND CUTOUT SET TO "MIN", JUMPER PIN ON TOP 2-PINS AS SHOWN.
5. WHEN USING A RARH SENSOR,MAKE CONNECTION IN THE RETURN AIR SECTION. WHEN USING SPRH SENSOR, MAKE CONNECTION HERE BY DISCONNECTING YELLOW WIRE.
6. IGC P3 SETTING:30 SEC.
7. DISCONNECT VIO TO ALLOW POWER EXHAUST CONNECTION.
8. TRANSFORMER IS DEDICATED BASED ON UNIT VOLTAGE. TAPS ONLY SHOWN TO SIMPLIFY SCHEMATIC. 208/230V UNIT TRAN IS WIRED FOR 230V UNIT. IF UNIT IS TO BE RUN WITH 208V POWER SUPPLY DISCONNECT BLK WIRE FROM 230V TAP AND CONNECT TO 208V TAP.
9. CONTROL BOARDS SHOWN HERE ARE IN THE UNPOWERED STATE.

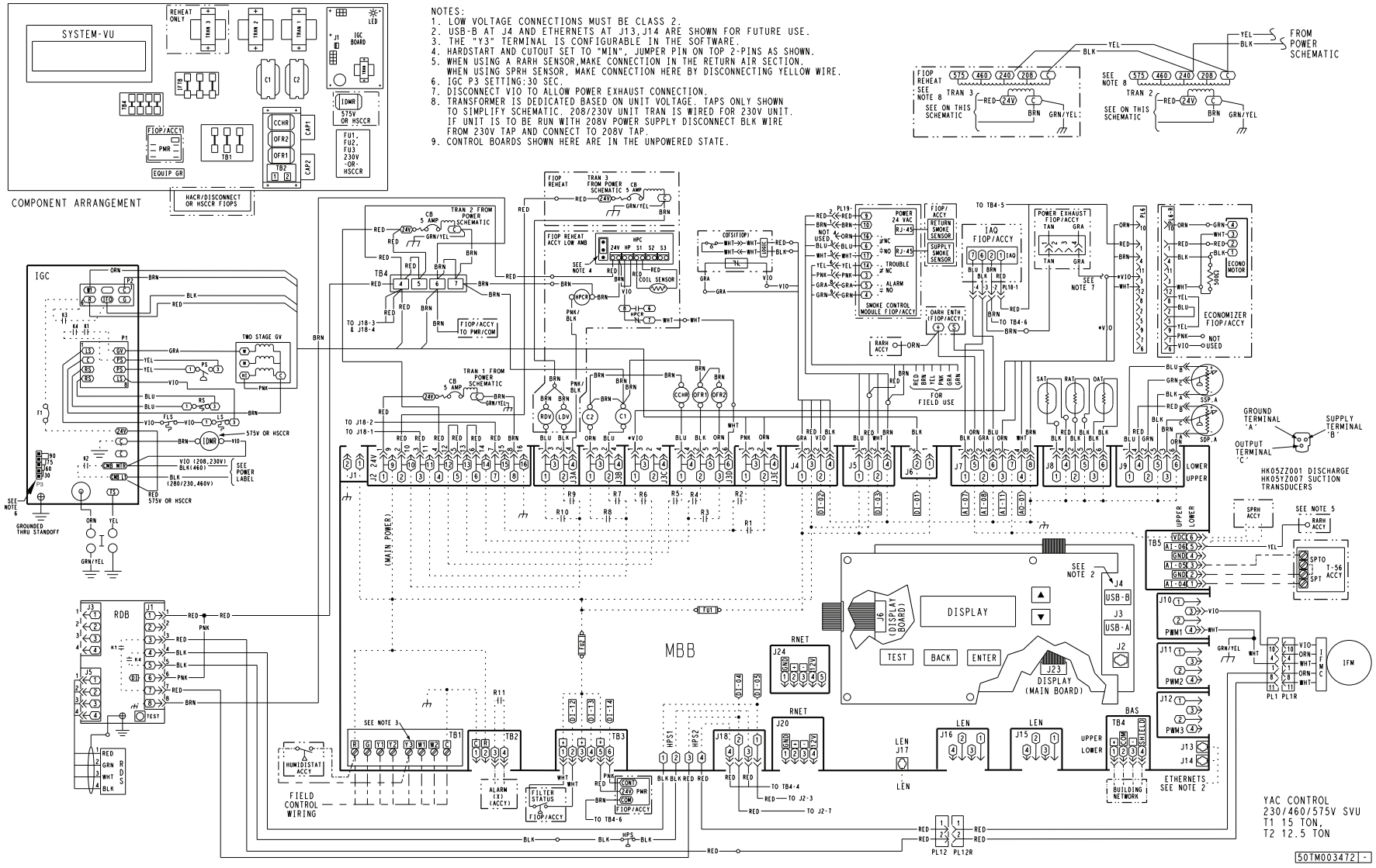

Typical Power Wiring Diagram — 48FE 16 208/230/460-3-60 Unit with Electromechanical Controller

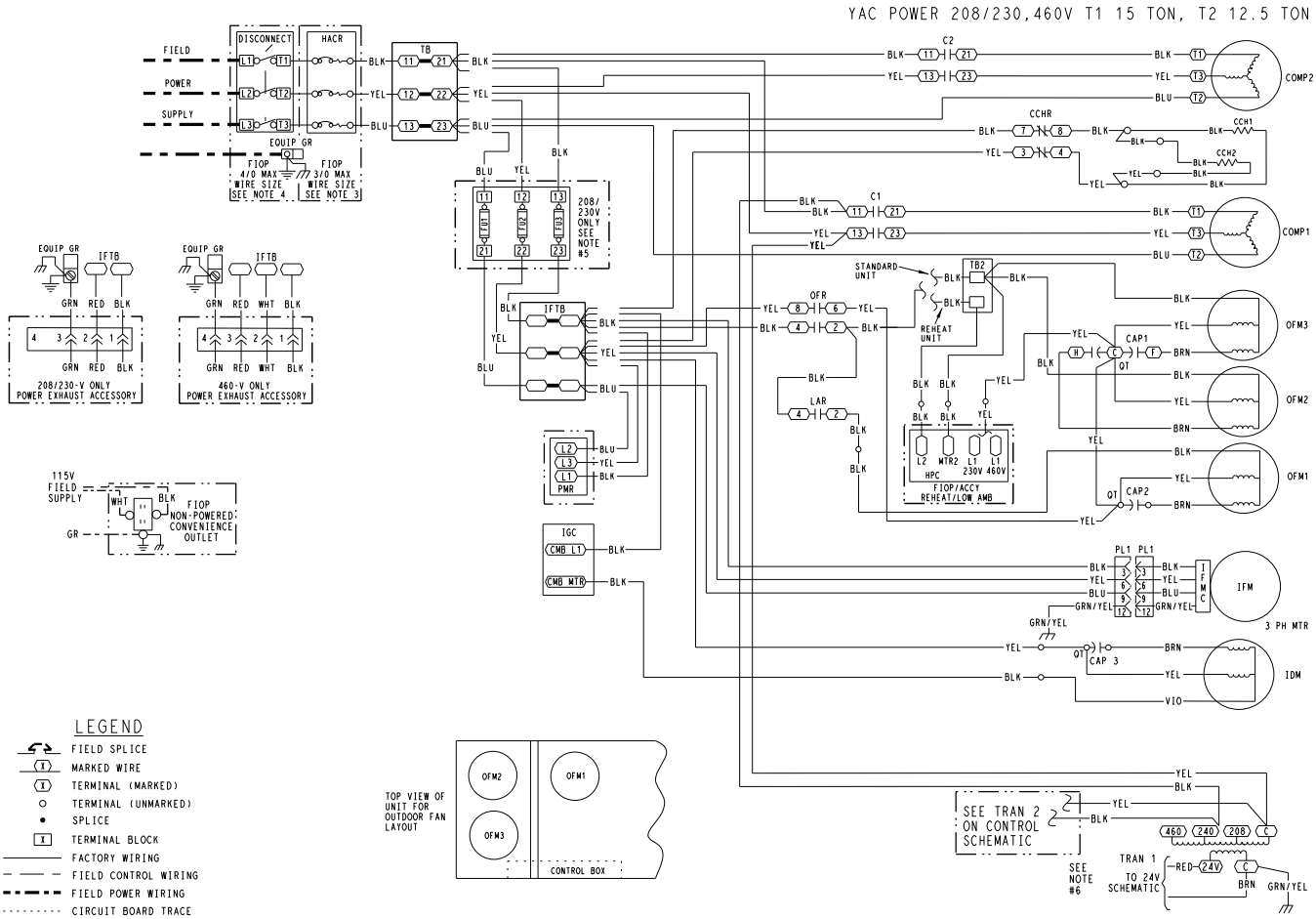

LEGEND

- FIELD SPLICE
- MARKED WIRE
- TERMINAL (MARKED)
- TERMINAL (UNMARKED)
- SPLICE
- TERMINAL BLOCK
- FACTORY WIRING
- FIELD CONTROL WIRING
- FIELD POWER WIRING
- CIRCUIT BOARD TRACE
- ACCESSORY OR FIOP
- TO INDICATE COMMON POTENTIAL ONLY: NOT TO REPRESENT WIRING

NOTES:
1. IF ANY OF THE ORIGINAL WIRE FURNISHED MUST BE REPLACED, IT MUST BE REPLACED WITH TYPE 90 C WIRE OR ITS EQUIVALENT.
2. COMPRESSOR AND FAN MOTORS ARE THERMALLY PROTECTED. THREE PHASE MOTORS ARE PROTECTED AGAINST PRIMARY SINGLE PHASING CONDITIONS.
3. USE COPPER, COPPER CLAD ALUMINUM OR ALUMINUM CONDUCTORS.
4. USE COPPER CONDUCTORS ONLY.
5. FU1, FU2, AND FU3, REPLACE WITH 250V 60A BUSSMAN FRNR 60.
6. TRANSFORMER IS DEDICATED BASED ON UNIT VOLTAGE. TAPS ONLY SHOWN TO SIMPLIFY SCHEMATIC. 208/230V UNIT TRAN IS WIRED FOR 230V UNIT. IF UNIT IS TO BE RUN WITH 208V POWER SUPPLY DISCONNECT BLK WIRE FROM 230V TAP AND CONNECT TO 200V TAP.

ACCY	ACCESSORY
AMB	AMBIENT
C	CONTACTOR,COMPRESSOR
CAP	CAPACITOR
CB	CIRCUIT BREAKER
CCH	CRANKCASE HEATER
CCHR	CRANKCASE HEATER RELAY
CMB	COMBUSTION
COFS	CONDENSATE OVERFLOW SWT
COMP	COMPRESSOR MOTOR
DDC	DIRECT DIGITAL CONTROL
EHR	ELECTRIC HEATER RELAY
ERV	ENERGY RECOVERY VENTILATOR
FIOP	FACTORY INSTALLED OPTION
FLS	FAN LIMIT SWITCH
FPT	FREEZE PROTECTION THERMOSTAT
FSD	FIRE SHUT DOWN
FS	FLAME SENSOR
FU	FUSE
GND	GROUND
GVR	GAS VALVE RELAY
HPC	HEAD PRESSURE CONTROL
HPS	HIGH PRESSURE SWITCH
HS	HALL EFFECT SENSOR
I	IGNITOR
IAQ	INDOOR AIR QUALITY SENSORS
IDM	INDUCED DRAFT MOTOR
IFCB	INDOOR FAN CIRCUIT BREAKER
IFM	INDOOR FAN MOTOR
IFMC	INDOOR FAN CONTROLLER
IGC	INTEGRATED GAS CONTROL
IFTB	INDOOR FAN TERMINAL BLOCK
JMP	JUMPER
LA	LOW AMBIENT
LAR	LOW AMBIENT RELAY
LDV	LIQUID DIVERTER VALVE
LPS	LOW PRESSURE SWITCH
LSM	LIMIT SWITCH (MANUAL RESET)
LS	LIMIT SWITCH
LTLO	LOW TEMPERATURE LOCKOUT
MGV	MAIN GAS VALVE
MOV	VOLTAGE RESTRICTOR
MTR	MOTOR
MTS	MIXED AIR TEMPERATURE SWITCH
OAQ	OUTDOOR AIR QUALITY
OARH	OUTSIDE AIR RELATIVE HUMIDITY
OAT	OUTDOOR AIR TEMP. SENSOR
OFM	OUTDOOR FAN MOTOR
OFR	OUTDOOR FAN RELAY
OL	OVERLOAD
PL	PLUG ASSEMBLY
POT	POTENTIOMETER
PMR	PHASE MONITOR RELAY
QT	QUADRUPLE TERMINAL
RARH	RETURN AIR RELATIVE HUMIDITY
RAT	RETURN AIR TEMP. SENSOR
RDB	REFRIGERANT DISSIPATION BOARD
RDS	REFRIGERANT DISSIPATION SENSOR
RDV	REHEAT DISCHARGE VALVE
RS	ROLLOUT SWITCH
RVSR	REVERSING VALVE SOLENOID RELAY
SAT	SUPPLY AIR TEMP. SENSOR
SEN	SENSOR
SPRH	SPACE RELATIVE HUMIDITY
SPT	SPACE TEMPERATURE SENSOR
SPTO	SPACE TEMPERATURE OFFSET
STD	STANDARD
TB	TERMINAL BLOCK
TBR	TEMPERATURE BYPASS RELAY
TDR	TIME DELAY RELAY (WINTER START)
TRAN	TRANSFORMER
UCB	UNIT CONTROL BOARD

50TM001914 D

Typical Power Wiring Diagram — 48FE 16 208/230/460-3-60 Unit with SystemVu™ Controller

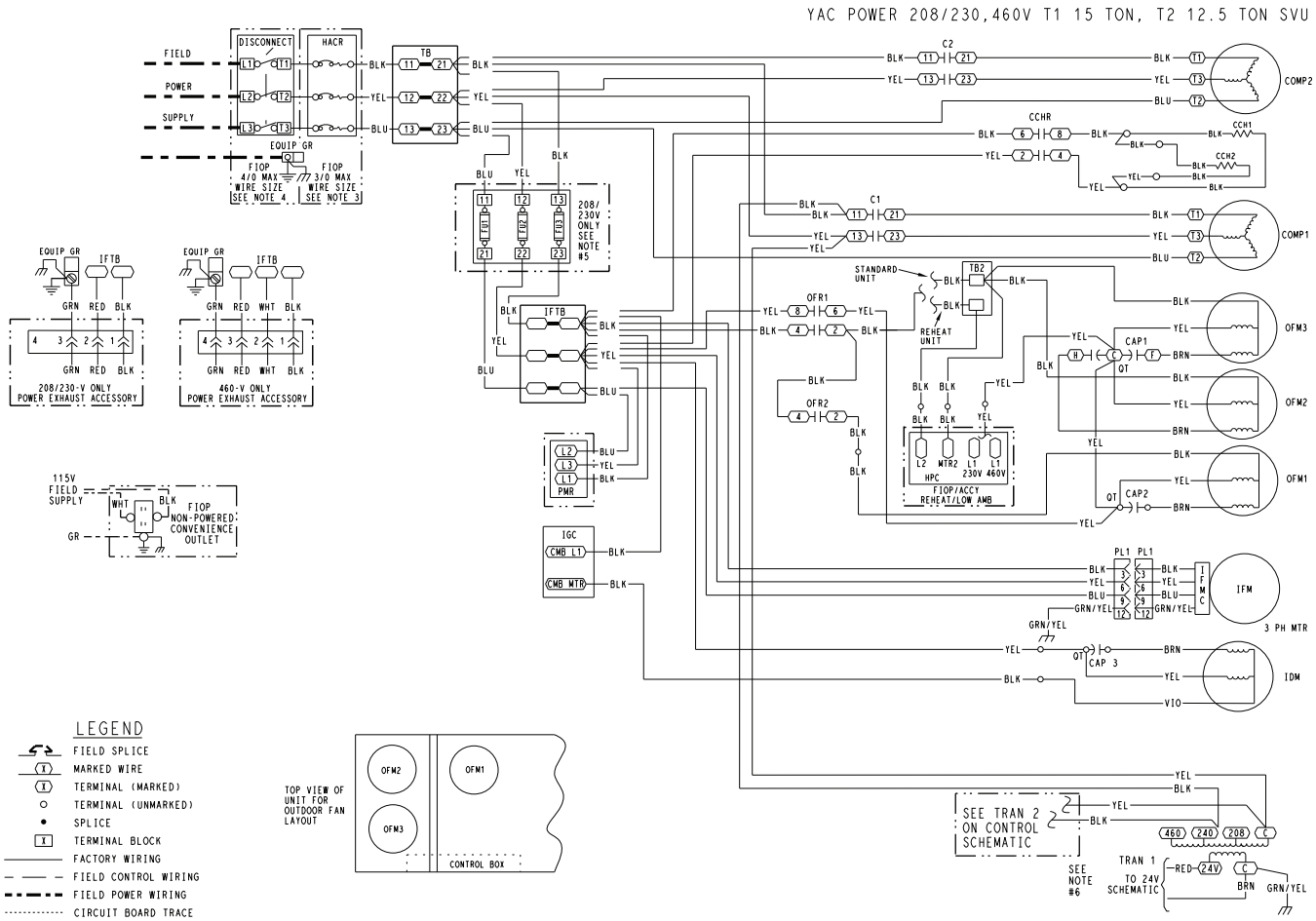

LEGEND

- FIELD SPLICE
- MARKED WIRE
- TERMINAL (MARKED)
- TERMINAL (UNMARKED)
- SPLICE
- TERMINAL BLOCK
- FACTORY WIRING
- FIELD CONTROL WIRING
- FIELD POWER WIRING
- CIRCUIT BOARD TRACE
- ACCESSORY OR FIOP
- TO INDICATE COMMON POTENTIAL ONLY: NOT TO REPRESENT WIRING

NOTES:
1. IF ANY OF THE ORIGINAL WIRE FURNISHED MUST BE REPLACED, IT MUST BE REPLACED WITH TYPE 90 C WIRE OR ITS EQUIVALENT.
2. COMPRESSOR AND FAN MOTORS ARE THERMALLY PROTECTED. THREE PHASE MOTORS ARE PROTECTED AGAINST PRIMARY SINGLE PHASING CONDITIONS.
3. USE COPPER, COPPER CLAD ALUMINUM OR ALUMINUM CONDUCTORS.
4. USE COPPER CONDUCTORS ONLY.
5. FU1, FU2, AND FU3, REPLACE WITH 250V 60A BUSSMAN FRNR 60.
6. TRANSFORMER IS DEDICATED BASED ON UNIT VOLTAGE. TAPS ONLY SHOWN TO SIMPLIFY SCHEMATIC. 208/230V UNIT TRAN IS WIRED FOR 230V UNIT. IF UNIT IS TO BE RUN WITH 208V POWER SUPPLY DISCONNECT BLK WIRE FROM 230V TAP AND CONNECT TO 200V TAP.

ACCY	ACCESSORY
AMB	AMBIENT
C	CONTACTOR,COMPRESSOR
CAP	CAPACITOR
CB	CIRCUIT BREAKER
CCH	CRANKCASE HEATER
CCHR	CRANKCASE HEATER RELAY
CMB	COMBUSTION
COFS	CONDENSATE OVERFLOW SWT
COMP	COMPRESSOR MOTOR
DDC	DIRECT DIGITAL CONTROL
EHR	ELECTRIC HEATER RELAY
ERV	ENERGY RECOVERY VENTILATOR
FIOP	FACTORY INSTALLED OPTION
FLS	FAN LIMIT SWITCH
FPT	FREEZE PROTECTION THERMOSTAT
FSD	FIRE SHUT DOWN
FS	FLAME SENSOR
FU	FUSE
GND	GROUND
GVR	GAS VALVE RELAY
HPC	HEAD PRESSURE CONTROL
HPS	HIGH PRESSURE SWITCH
HS	HALL EFFECT SENSOR
I	IGNITOR
IAQ	INDOOR AIR QUALITY SENSORS
IDM	INDUCED DRAFT MOTOR
IFCB	INDOOR FAN CIRCUIT BREAKER
IFM	INDOOR FAN MOTOR
IFMC	INDOOR FAN CONTROLLER
IGC	INTEGRATED GAS CONTROL
IFTB	INDOOR FAN TERMINAL BLOCK
JMP	JUMPER
LA	LOW AMBIENT
LAR	LOW AMBIENT RELAY
LDV	LIQUID DIVERTER VALVE
LPS	LOW PRESSURE SWITCH
LSM	LIMIT SWITCH (MANUAL RESET)
LS	LIMIT SWITCH
LTLO	LOW TEMPERATURE LOCKOUT
MGV	MAIN GAS VALVE
MOV	VOLTAGE RESTRICTOR
MTR	MOTOR
MTS	MIXED AIR TEMPERATURE SWITCH
OAQ	OUTDOOR AIR QUALITY
OARH	OUTSIDE AIR RELATIVE HUMIDITY
OAT	OUTDOOR AIR TEMP. SENSOR
OFM	OUTDOOR FAN MOTOR
OFR	OUTDOOR FAN RELAY
OL	OVERLOAD
PL	PLUG ASSEMBLY
POT	POTENTIOMETER
PMR	PHASE MONITOR RELAY
QT	QUADRUPLE TERMINAL
RARH	RETURN AIR RELATIVE HUMIDITY
RAT	RETURN AIR TEMP. SENSOR
RDB	REFRIGERANT DISSIPATION BOARD
RDS	REFRIGERANT DISSIPATION SENSOR
RDV	REHEAT DISCHARGE VALVE
RS	ROLLOUT SWITCH
RVSR	REVERSING VALVE SOLENOID RELAY
SAT	SUPPLY AIR TEMP. SENSOR
SEN	SENSOR
SPRH	SPACE RELATIVE HUMIDITY
SPT	SPACE TEMPERATURE SENSOR
SPTO	SPACE TEMPERATURE OFFSET
STD	STANDARD
TB	TERMINAL BLOCK
TBR	TEMPERATURE BYPASS RELAY
TDR	TIME DELAY RELAY(WINTER START)
TRAN	TRANSFORMER
UCB	UNIT CONTROL BOARD

50TM002657 B

Typical Control Wiring Diagram — 50FE 08-12 230/460/575-3-60 Unit with Electromechanical Controller and POL224 Economizer

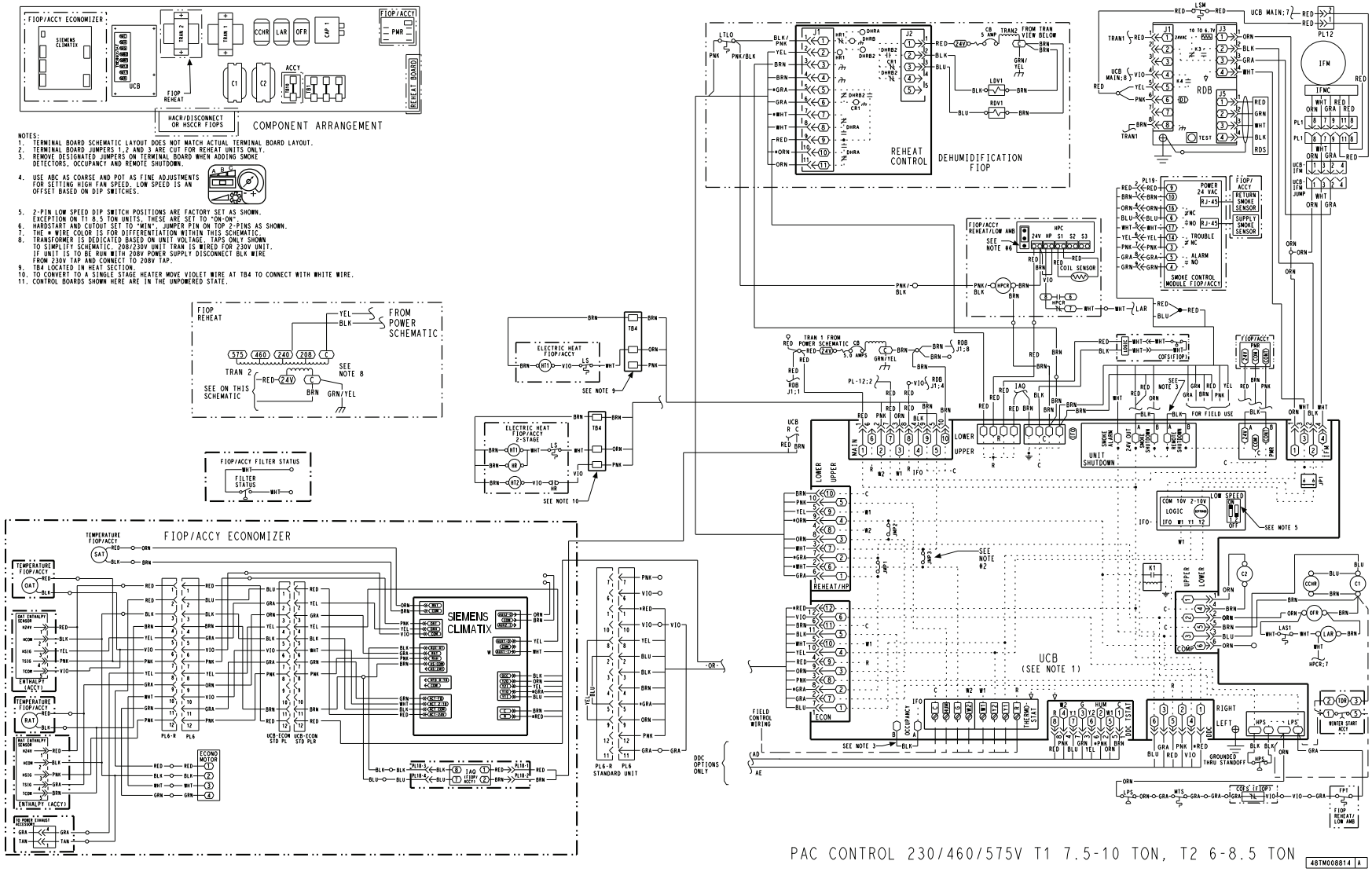

Typical Control Wiring Diagram — 50FE 08-12 230/460/575-3-60 Unit with SystemVu™ Controller

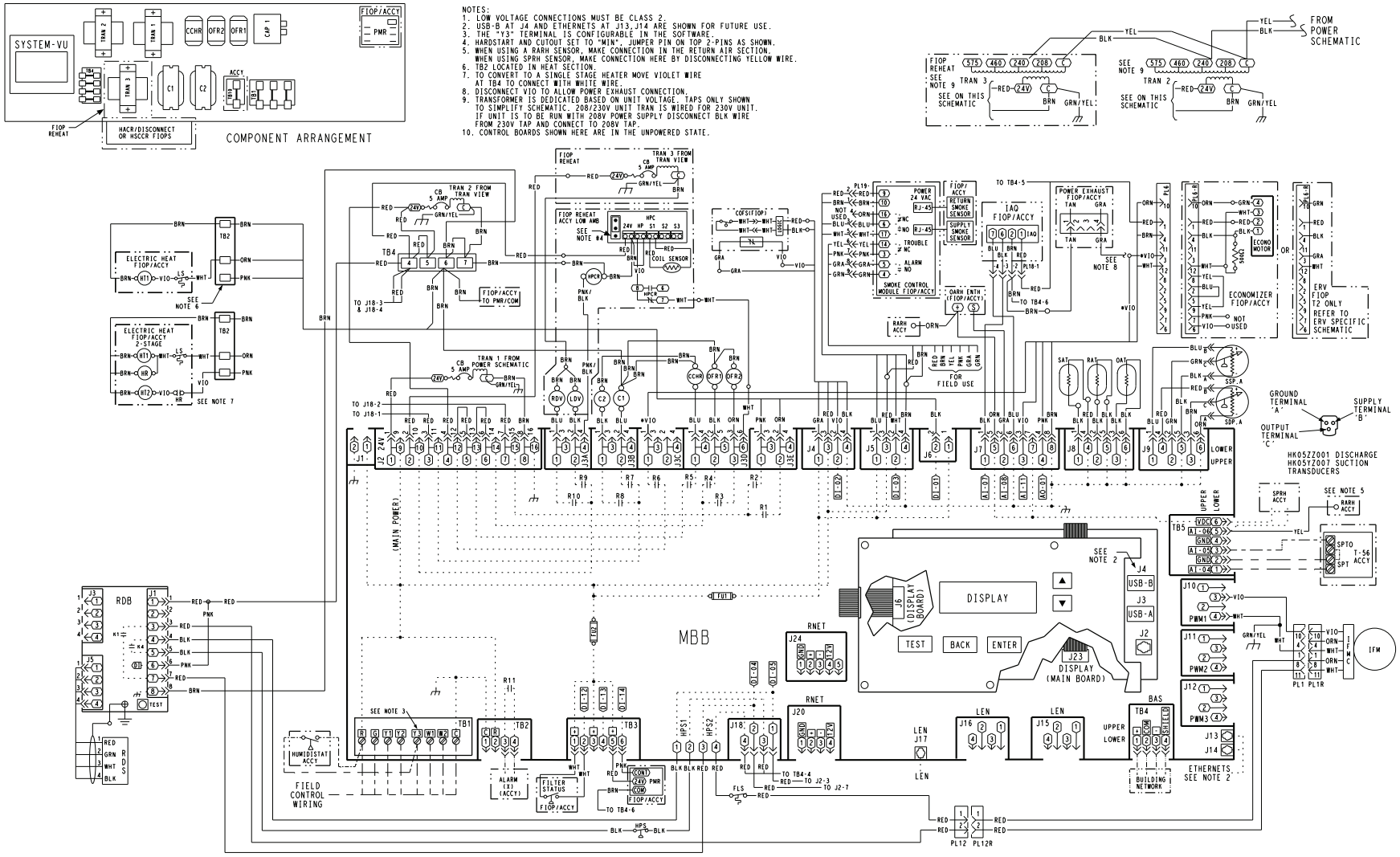

Typical Power Wiring Diagram — 50FE 08-12 230/460-3-60 Unit with Electromechanical Controller

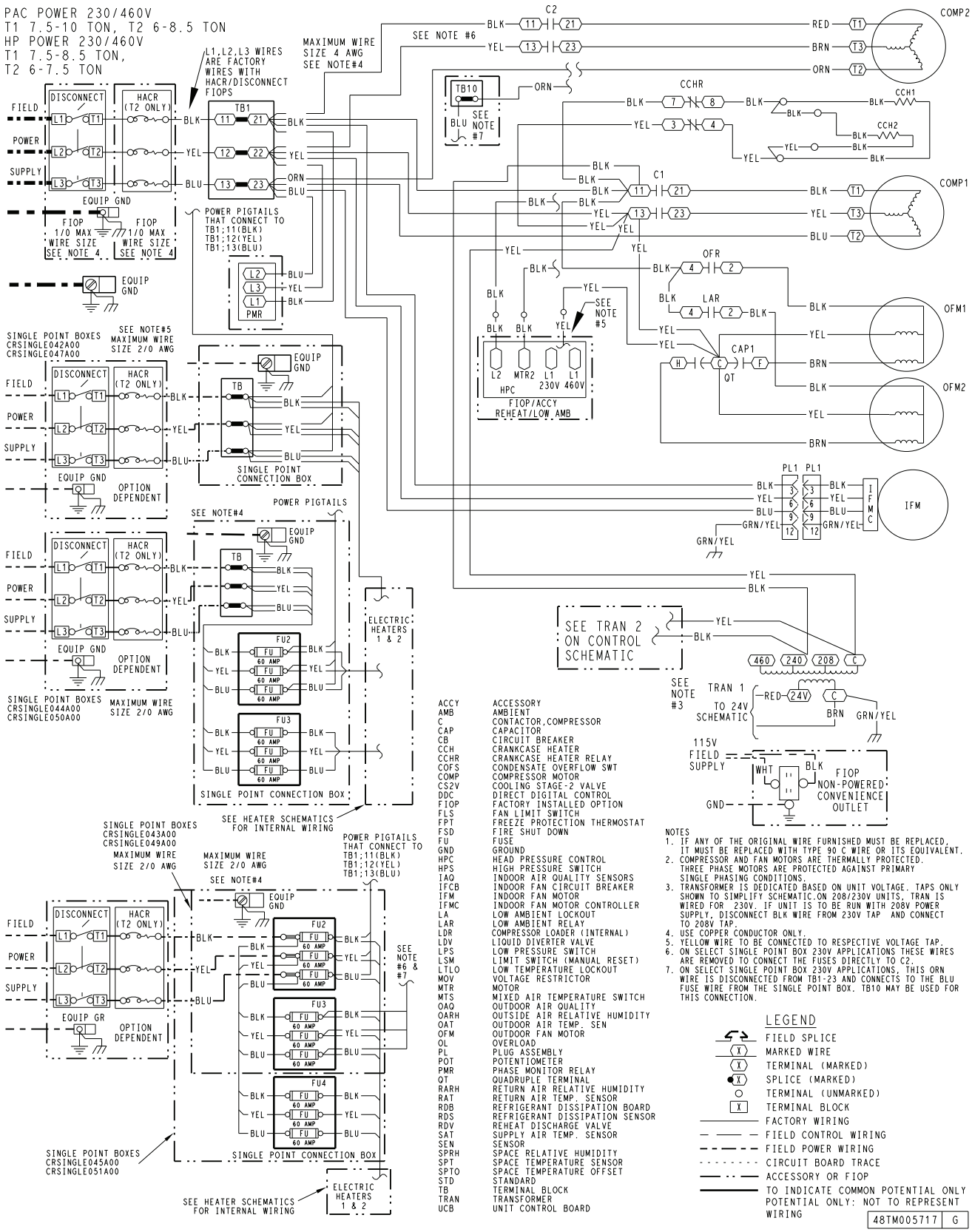

ACCY	ACCESSORY
AMB	AMBIENT
C	CONTACTOR,COMPRESSOR
CAP	CAPACITOR
CB	CIRCUIT BREAKER
CCH	CRANKCASE HEATER
CCHR	CRANKCASE HEATER RELAY
COFS	CONDENSATE OVERFLOW SWT
COMP	COMPRESSOR MOTOR
CS2V	COOLING STAGE-2 VALVE
DDC	DIRECT DIGITAL CONTROL
FIOP	FACTORY INSTALLED OPTION
FLS	FAN LIMIT SWITCH
FPT	FREEZE PROTECTION THERMOSTAT
FSD	FIRE SHUT DOWN
FU	FUSE
GND	GROUND
HPC	HEAD PRESSURE CONTROL
HPS	HIGH PRESSURE SWITCH
IAQ	INDOOR AIR QUALITY SENSORS
IFCB	INDOOR FAN CIRCUIT BREAKER
IFM	INDOOR FAN MOTOR
IFMC	INDOOR FAN MOTOR CONTROLLER
LA	LOW AMBIENT LOCKOUT
LAR	LOW AMBIENT RELAY
LDR	COMPRESSOR LOADER (INTERNAL)
LDV	LIQUID DIVERTER VALVE
LPS	LOW PRESSURE SWITCH
LSM	LIMIT SWITCH (MANUAL RESET)
LTLO	LOW TEMPERATURE LOCKOUT
MOV	VOLTAGE RESTRICTOR
MTR	MOTOR
MTS	MIXED AIR TEMPERATURE SWITCH
OAQ	OUTDOOR AIR QUALITY
OARH	OUTSIDE AIR RELATIVE HUMIDITY
OAT	OUTDOOR AIR TEMP. SEN
OFM	OUTDOOR FAN MOTOR
OL	OVERLOAD
PL	PLUG ASSEMBLY
POT	POTENTIOMETER
PMR	PHASE MONITOR RELAY
QT	QUADRUPLE TERMINAL
RARH	RETURN AIR RELATIVE HUMIDITY
RAT	RETURN AIR TEMP. SENSOR
RDB	REFRIGERANT DISSIPATION BOARD
RDS	REFRIGERANT DISSIPATION SENSOR
RDV	REHEAT DISCHARGE VALVE
SAT	SUPPLY AIR TEMP. SENSOR
SEN	SENSOR
SPRH	SPACE RELATIVE HUMIDITY
SPT	SPACE TEMPERATURE SENSOR
SPTO	SPACE TEMPERATURE OFFSET
STD	STANDARD
TB	TERMINAL BLOCK
TRAN	TRANSFORMER
UCB	UNIT CONTROL BOARD

NOTES
1. IF ANY OF THE ORIGINAL WIRE FURNISHED MUST BE REPLACED, IT MUST BE REPLACED WITH TYPE 90 C WIRE OR ITS EQUIVALENT.
2. COMPRESSOR AND FAN MOTORS ARE THERMALLY PROTECTED. THREE PHASE MOTORS ARE PROTECTED AGAINST PRIMARY SINGLE PHASING CONDITIONS.
3. TRANSFORMER IS DEDICATED BASED ON UNIT VOLTAGE. TAPS ONLY SHOWN TO SIMPLIFY SCHEMATIC.ON 208/230V UNITS, TRAN IS WIRED FOR 230V. IF UNIT IS TO BE RUN WITH 208V POWER SUPPLY, DISCONNECT BLK WIRE FROM 230V TAP AND CONNECT TO 208V TAP.
4. USE COPPER CONDUCTOR ONLY.
5. YELLOW WIRE TO BE CONNECTED TO RESPECTIVE VOLTAGE TAP.
6. ON SELECT SINGLE POINT BOX 230V APPLICATIONS THESE WIRES ARE REMOVED TO CONNECT THE FUSES DIRECTLY TO C2.
7. ON SELECT SINGLE POINT BOX 230V APPLICATIONS, THIS ORN WIRE IS DISCONNECTED FROM TB1-23 AND CONNECTS TO THE BLU FUSE WIRE FROM THE SINGLE POINT BOX. TB10 MAY BE USED FOR THIS CONNECTION.

LEGEND

	FIELD SPLICE
X	MARKED WIRE
X	TERMINAL (MARKED)
X	SPLICE (MARKED)
	TERMINAL (UNMARKED)
X	TERMINAL BLOCK
	FACTORY WIRING
	FIELD CONTROL WIRING
	FIELD POWER WIRING
	CIRCUIT BOARD TRACE
	ACCESSORY OR FIOP
	TO INDICATE COMMON POTENTIAL ONLY POTENTIAL ONLY: NOT TO REPRESENT WIRING

48TM005717 G

Typical Power Wiring Diagram — 50FE 08-12 230/460-3-60 Unit with SystemVu™ Controller

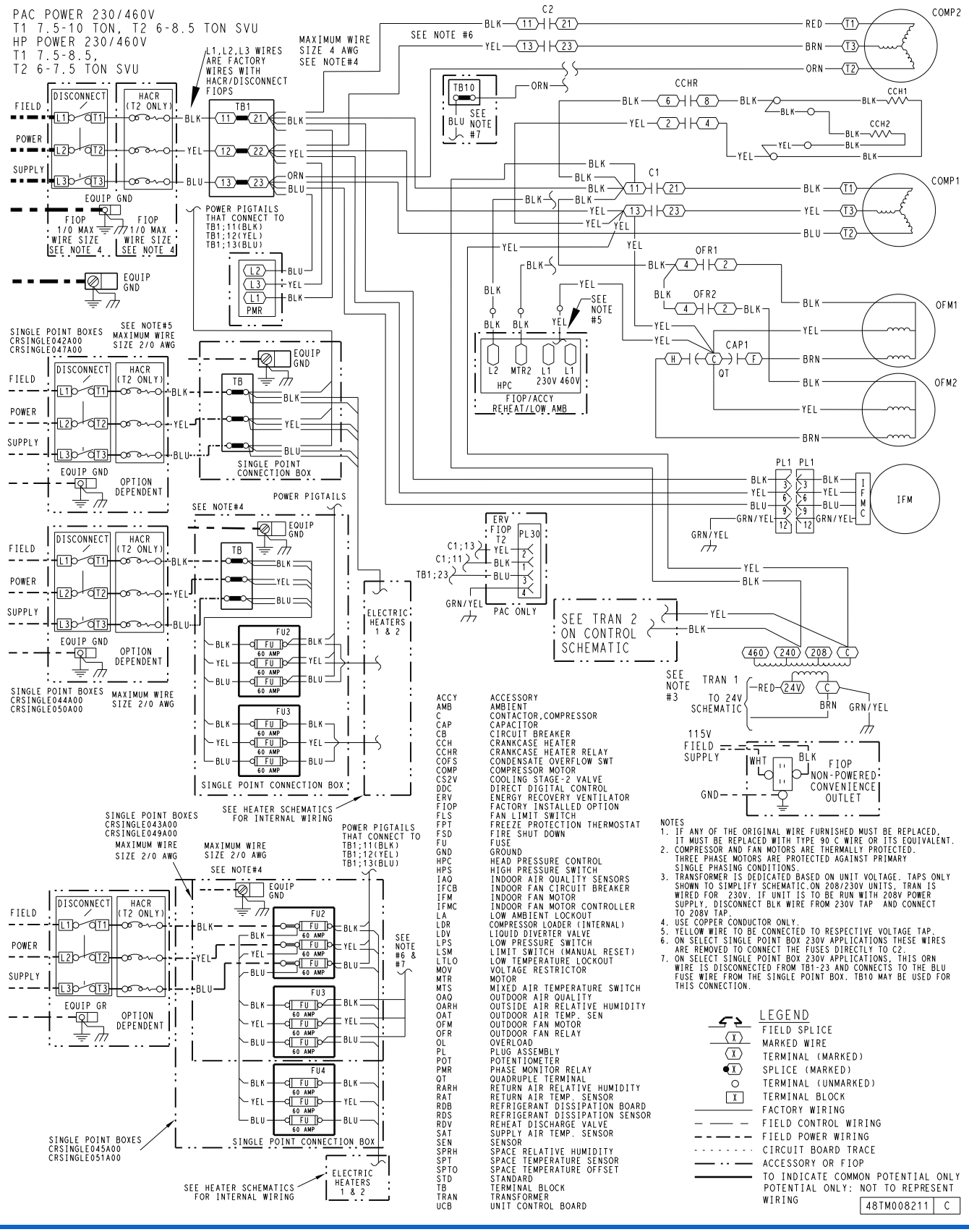

ACCY	ACCESSORY
AMB	AMBIENT
C	CONTACTOR,COMPRESSOR
CAP	CAPACITOR
CB	CIRCUIT BREAKER
CCH	CRANKCASE HEATER
CCHR	CRANKCASE HEATER RELAY
COFS	CONDENSATE OVERFLOW SWT
COMP	COMPRESSOR MOTOR
CS2V	COOLING STAGE-2 VALVE
DDC	DIRECT DIGITAL CONTROL
ERV	ENERGY RECOVERY VENTILATOR
FIOP	FACTORY INSTALLED OPTION
FLS	FAN LIMIT SWITCH
FPT	FREEZE PROTECTION THERMOSTAT
FSD	FIRE SHUT DOWN
FU	FUSE
GND	GROUND
HPC	HEAD PRESSURE CONTROL
HPS	HIGH PRESSURE SWITCH
IAQ	INDOOR AIR QUALITY SENSORS
IFCB	INDOOR FAN CIRCUIT BREAKER
IFM	INDOOR FAN MOTOR
IFMC	INDOOR FAN MOTOR CONTROLLER
LA	LOW AMBIENT LOCKOUT
LDR	COMPRESSOR LOADER (INTERNAL)
LDV	LIQUID DIVERTER VALVE
LPS	LOW PRESSURE SWITCH
LSM	LIMIT SWITCH (MANUAL RESET)
LTLO	LOW TEMPERATURE LOCKOUT
MOV	VOLTAGE RESTRICTOR
MTR	MOTOR
MTS	MIXED AIR TEMPERATURE SWITCH
OAQ	OUTDOOR AIR QUALITY
OARH	OUTSIDE AIR RELATIVE HUMIDITY
OAT	OUTDOOR AIR TEMP. SEN
OFM	OUTDOOR FAN MOTOR
OFR	OUTDOOR FAN RELAY
OL	OVERLOAD
PL	PLUG ASSEMBLY
POT	POTENTIOMETER
PMR	PHASE MONITOR RELAY
QT	QUADRUPLE TERMINAL
RARH	RETURN AIR RELATIVE HUMIDITY
RAT	RETURN AIR TEMP. SENSOR
RDB	REFRIGERANT DISSIPATION BOARD
RDS	REFRIGERANT DISSIPATION SENSOR
RDV	REHEAT DISCHARGE VALVE
SAT	SUPPLY AIR TEMP. SENSOR
SEN	SENSOR
SPRH	SPACE RELATIVE HUMIDITY
SPT	SPACE TEMPERATURE SENSOR
SPTO	SPACE TEMPERATURE OFFSET
STD	STANDARD
TB	TERMINAL BLOCK
TRAN	TRANSFORMER
UCB	UNIT CONTROL BOARD

NOTES
1. IF ANY OF THE ORIGINAL WIRE FURNISHED MUST BE REPLACED, IT MUST BE REPLACED WITH TYPE 90 C WIRE OR ITS EQUIVALENT.
2. COMPRESSOR AND FAN MOTORS ARE THERMALLY PROTECTED. THREE PHASE MOTORS ARE PROTECTED AGAINST PRIMARY SINGLE PHASING CONDITIONS.
3. TRANSFORMER IS DEDICATED BASED ON UNIT VOLTAGE. TAPS ONLY SHOWN TO SIMPLIFY SCHEMATIC.ON 208/230V UNITS, TRAN IS WIRED FOR 230V. IF UNIT IS TO BE RUN WITH 208V POWER SUPPLY, DISCONNECT BLK WIRE FROM 230V TAP AND CONNECT TO 208V TAP.
4. USE COPPER CONDUCTOR ONLY.
5. YELLOW WIRE TO BE CONNECTED TO RESPECTIVE VOLTAGE TAP.
6. ON SELECT SINGLE POINT BOX 230V APPLICATIONS THESE WIRES ARE REMOVED TO CONNECT THE FUSES DIRECTLY TO C2.
7. ON SELECT SINGLE POINT BOX 230V APPLICATIONS, THIS ORN WIRE IS DISCONNECTED FROM TB1-23 AND CONNECTS TO THE BLU FUSE WIRE FROM THE SINGLE POINT BOX. TB10 MAY BE USED FOR THIS CONNECTION.

LEGEND
- FIELD SPLICE
- MARKED WIRE
- TERMINAL (MARKED)
- SPLICE (MARKED)
- TERMINAL (UNMARKED)
- TERMINAL BLOCK
- FACTORY WIRING
- FIELD CONTROL WIRING
- FIELD POWER WIRING
- CIRCUIT BOARD TRACE
- ACCESSORY OR FIOP
- TO INDICATE COMMON POTENTIAL ONLY POTENTIAL ONLY: NOT TO REPRESENT WIRING

48TM008211 | C

Typical Control Wiring Diagram — 50FE 14 230/460/575-3-60 Unit with Electromechanical Controller and POL224 Economizer

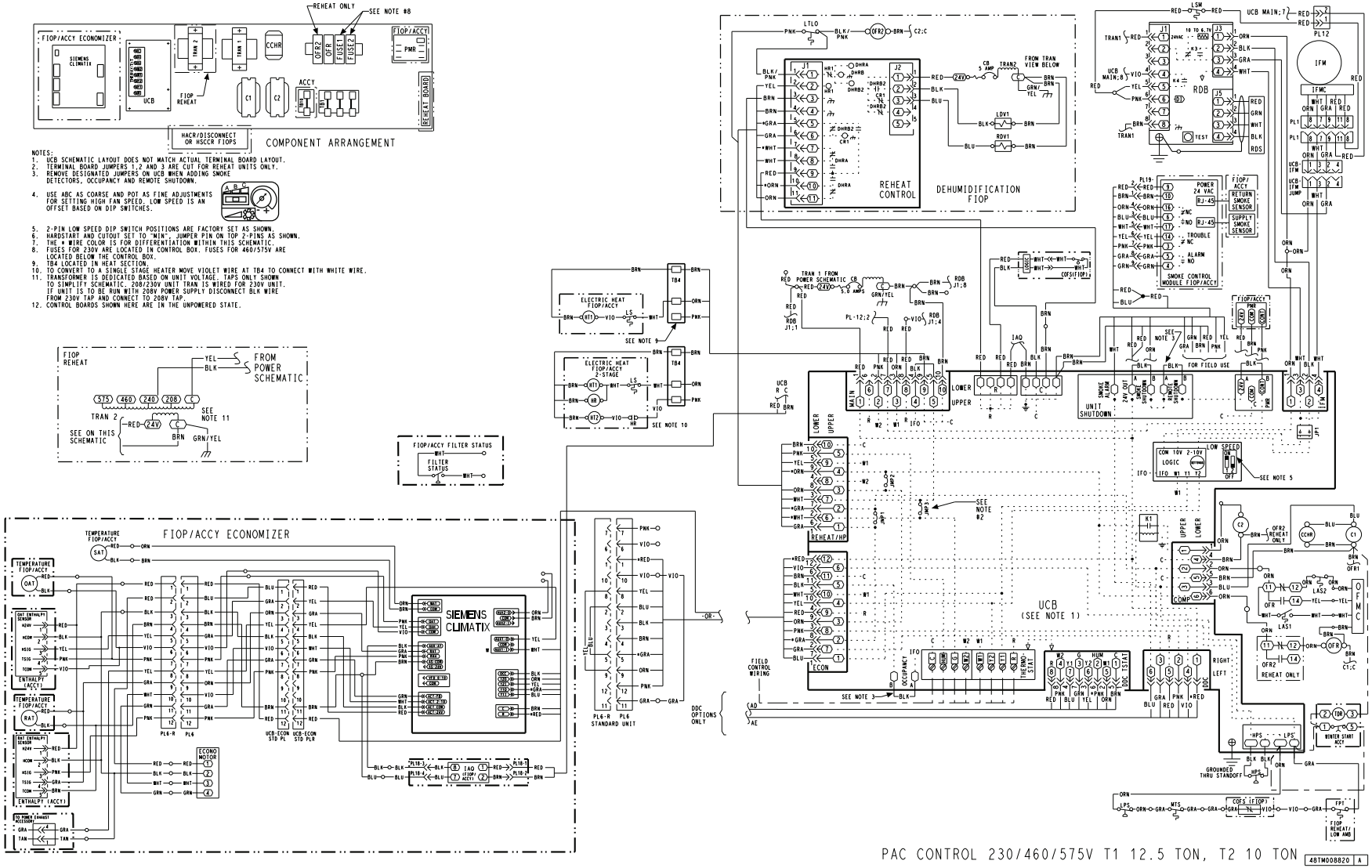

Typical Control Wiring Diagram — 50FE 14 230/460/575-3-60 Unit with SystemVu™ Controller

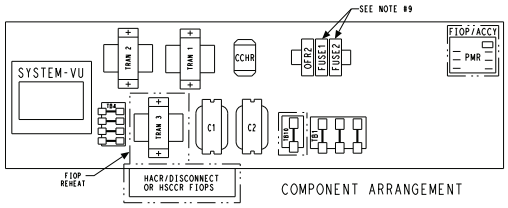

NOTES:
1. LOW VOLTAGE CONNECTIONS MUST BE CLASS 2.
2. USB-B AT J4 AND ETHERNETS AT J13,J14 ARE SHOWN FOR FUTURE USE.
3. THE "Y3" TERMINAL IS CONFIGURABLE IN THE SOFTWARE.
4. HARDSTART AND CUTOUT SET TO "MIN". JUMPER PIN ON TOP 2-PINS AS SHOWN.
5. WHEN USING A RARH SENSOR, MAKE CONNECTION IN THE RETURN AIR SECTION. WHEN USING SPRH SENSOR, MAKE CONNECTION HERE BY DISCONNECTING YELLOW WIRE.
6. TB2 LOCATED IN HEAT SECTION.
7. TO CONVERT TO A SINGLE STAGE HEATER MOVE VIOLET WIRE AT TB4 TO CONNECT WITH WHITE WIRE.
8. DISCONNECT VIO TO ALLOW POWER EXHAUST CONNECTION.
9. FUSES FOR 230V ARE LOCATED IN CONTROL BOX. FUSES FOR 460/575V ARE LOCATED BELOW THE CONTROL BOX.
10. TRANSFORMER IS DEDICATED BASED ON UNIT VOLTAGE. TAPS ONLY SHOWN TO SIMPLIFY SCHEMATIC. 208/230V UNIT TRAN IS WIRED FOR 230V UNIT. IF UNIT IS TO BE RUN WITH 208V POWER SUPPLY DISCONNECT BLK WIRE FROM 230V TAP AND CONNECT TO 208V TAP.
11. CONTROL BOARDS SHOWN HERE ARE IN THE UNPOWERED STATE.

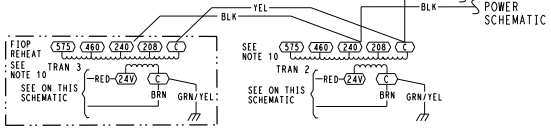

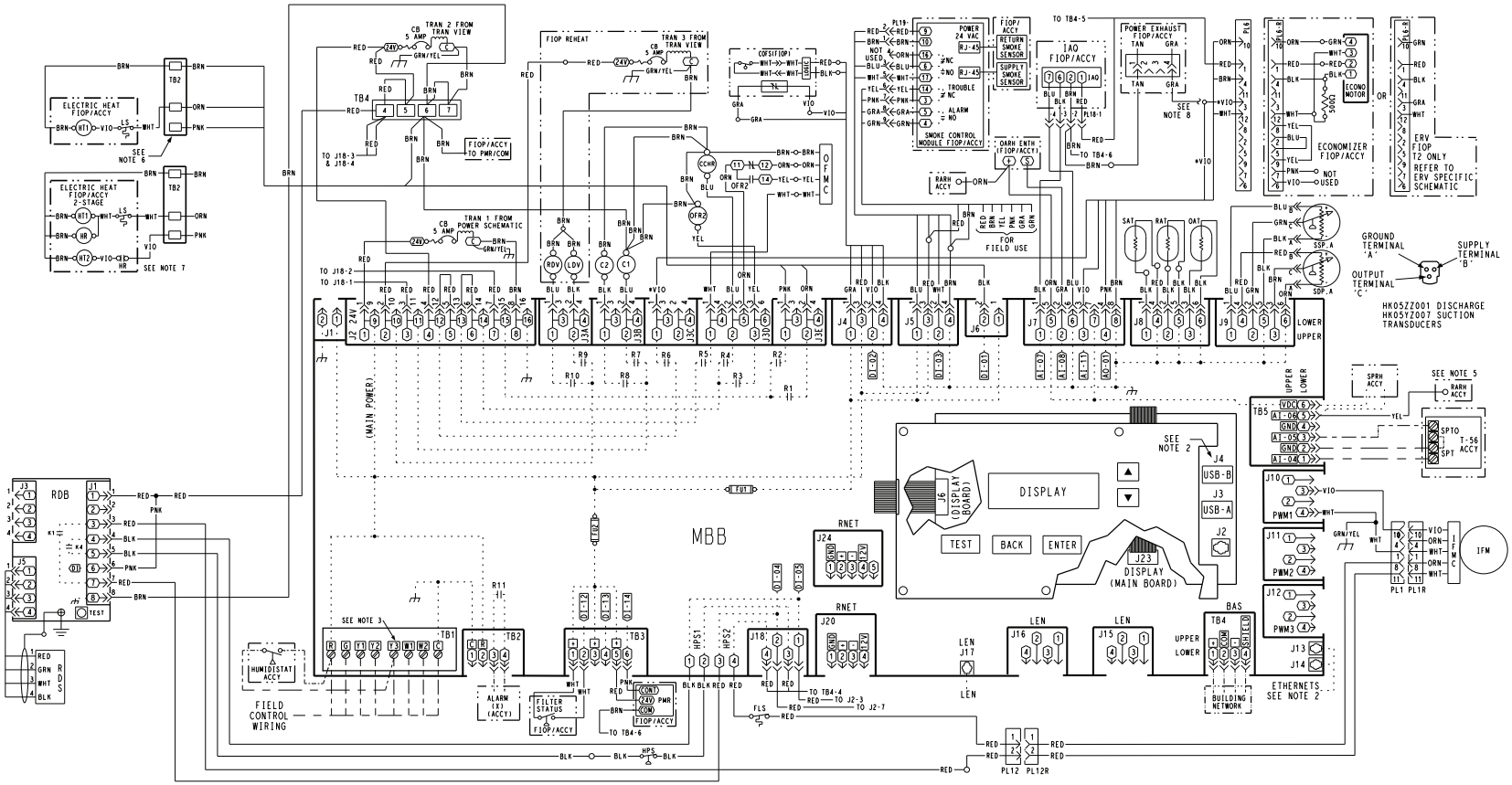

PAC CONTROL 230/460/575V SVU T1 12.5 TON, T2 10 TON 48TM008822 A

Typical Power Wiring Diagram — 50FE 14 208/230/460-3-60 Unit Electromechanical and SystemVu Controllers

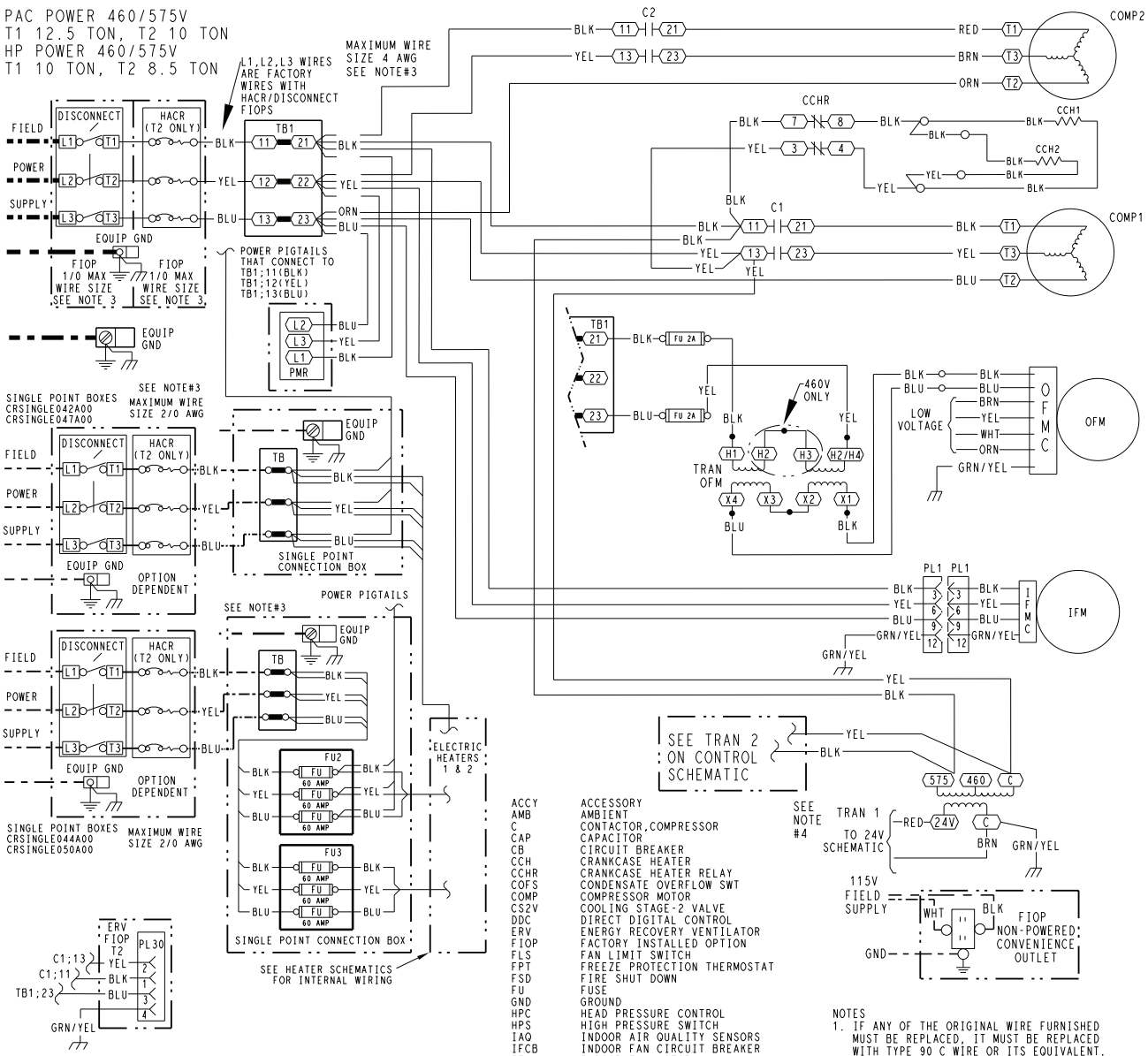

ACCY	ACCESSORY
AMB	AMBIENT
C	CONTACTOR,COMPRESSOR
CAP	CAPACITOR
CB	CIRCUIT BREAKER
CCH	CRANKCASE HEATER
CCHR	CRANKCASE HEATER RELAY
COFS	CONDENSATE OVERFLOW SWT
COMP	COMPRESSOR MOTOR
CS2V	COOLING STAGE-2 VALVE
DDC	DIRECT DIGITAL CONTROL
ERV	ENERGY RECOVERY VENTILATOR
FIOP	FACTORY INSTALLED OPTION
FLS	FAN LIMIT SWITCH
FPT	FREEZE PROTECTION THERMOSTAT
FSD	FIRE SHUT DOWN
FU	FUSE
GND	GROUND
HPC	HEAD PRESSURE CONTROL
HPS	HIGH PRESSURE SWITCH
IAQ	INDOOR AIR QUALITY SENSORS
IFCB	INDOOR FAN CIRCUIT BREAKER
IFM	INDOOR FAN MOTOR
IFMC	INDOOR FAN MOTOR CONTROLLER
LA	LOW AMBIENT LOCKOUT
LDR	COMPRESSOR LOADER (INTERNAL)
LDV	LIQUID DIVERTER VALVE
LPS	LOW PRESSURE SWITCH
LSM	LIMIT SWITCH (MANUAL RESET)
LTLO	LOW TEMPERATURE LOCKOUT
MOV	VOLTAGE RESTRICTOR
MTR	MOTOR
MTS	MIXED AIR TEMPERATURE SWITCH
OAQ	OUTDOOR AIR QUALITY
OARH	OUTSIDE AIR RELATIVE HUMIDITY
OAT	OUTDOOR AIR TEMP. SEN
OFM	OUTDOOR FAN MOTOR
OL	OVERLOAD
PL	PLUG ASSEMBLY
POT	POTENTIOMETER
PMR	PHASE MONITOR RELAY
QT	QUADRUPLE TERMINAL
RARH	RETURN AIR RELATIVE HUMIDITY
RAT	RETURN AIR TEMP. SENSOR
RDB	REFRIGERANT DISSIPATION BOARD
RDS	REFRIGERANT DISSIPATION SENSOR
RDV	REHEAT DISCHARGE VALVE
SAT	SUPPLY AIR TEMP. SENSOR
SEN	SENSOR
SPRH	SPACE RELATIVE HUMIDITY
SPT	SPACE TEMPERATURE SENSOR
SPTO	SPACE TEMPERATURE OFFSET
STD	STANDARD
TB	TERMINAL BLOCK
TRAN	TRANSFORMER
UCB	UNIT CONTROL BOARD

NOTES
1. IF ANY OF THE ORIGINAL WIRE FURNISHED MUST BE REPLACED, IT MUST BE REPLACED WITH TYPE 90 C WIRE OR ITS EQUIVALENT.
2. COMPRESSOR AND FAN MOTORS ARE THERMALLY PROTECTED. THREE PHASE MOTORS ARE PROTECTED AGAINST PRIMARY SINGLE PHASING CONDITIONS.
3. USE COPPER CONDUCTOR ONLY.
4. TRANSFORMER IS DEDICATED BASED ON UNIT VOLTAGE. TAPS ONLY SHOWN TO SIMPLIFY SCHEMATIC.

LEGEND
- FIELD SPLICE
- MARKED WIRE
- TERMINAL (MARKED)
- SPLICE (MARKED)
- TERMINAL (UNMARKED)
- TERMINAL BLOCK
- FACTORY WIRING
- FIELD CONTROL WIRING
- FIELD POWER WIRING
- CIRCUIT BOARD TRACE
- ACCESSORY OR FIOP
- TO INDICATE COMMON POTENTIAL ONLY POTENTIAL ONLY: NOT TO REPRESENT WIRING

Typical Control Wiring Diagram — 50FE 16 230/460/575-3-60 Unit with Electromechanical Controller and POL224 Economizer

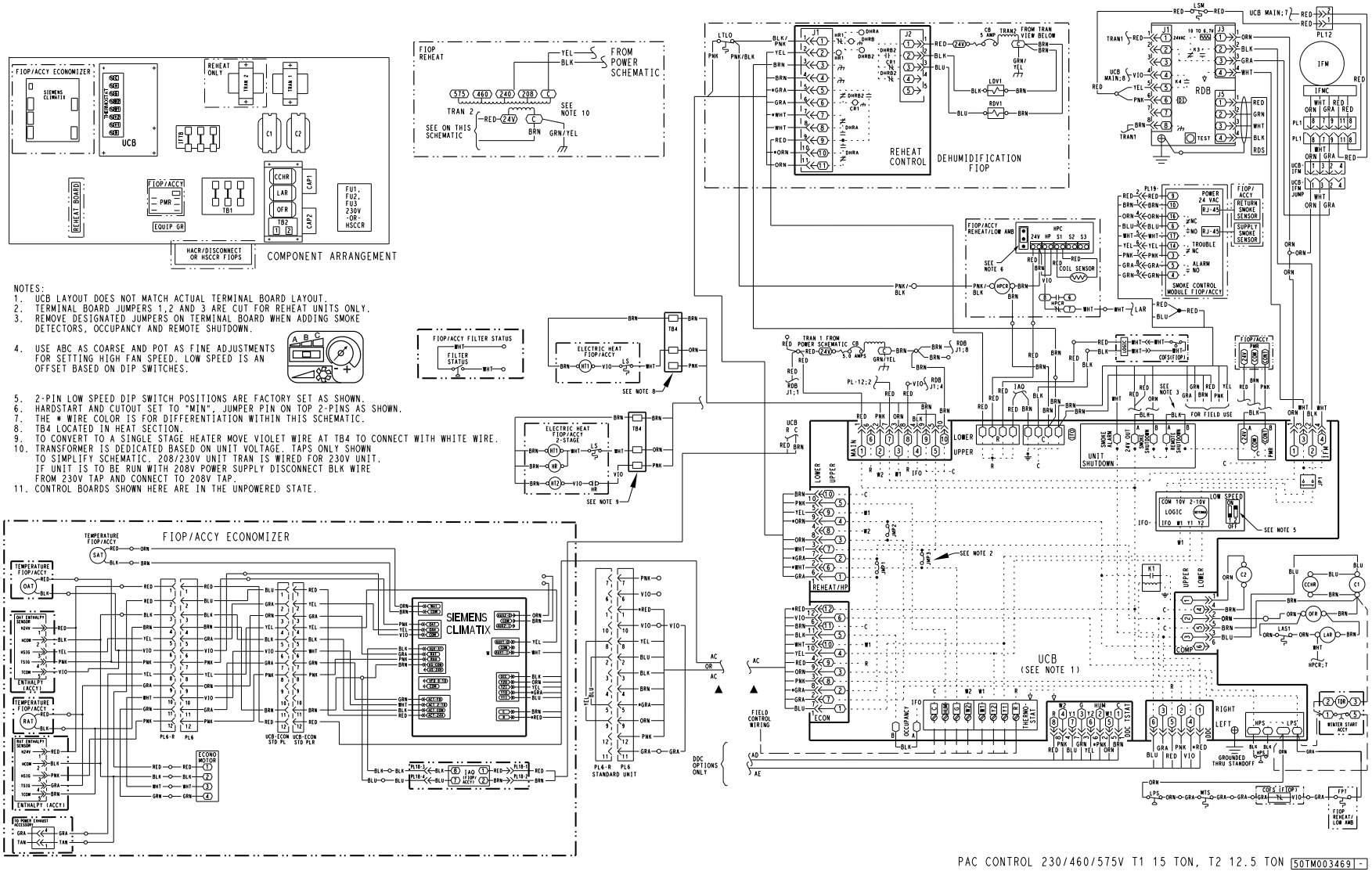

Typical Control Wiring Diagram — 50FE 16 230/460/575-3-60 Unit with SystemVu™ Controller

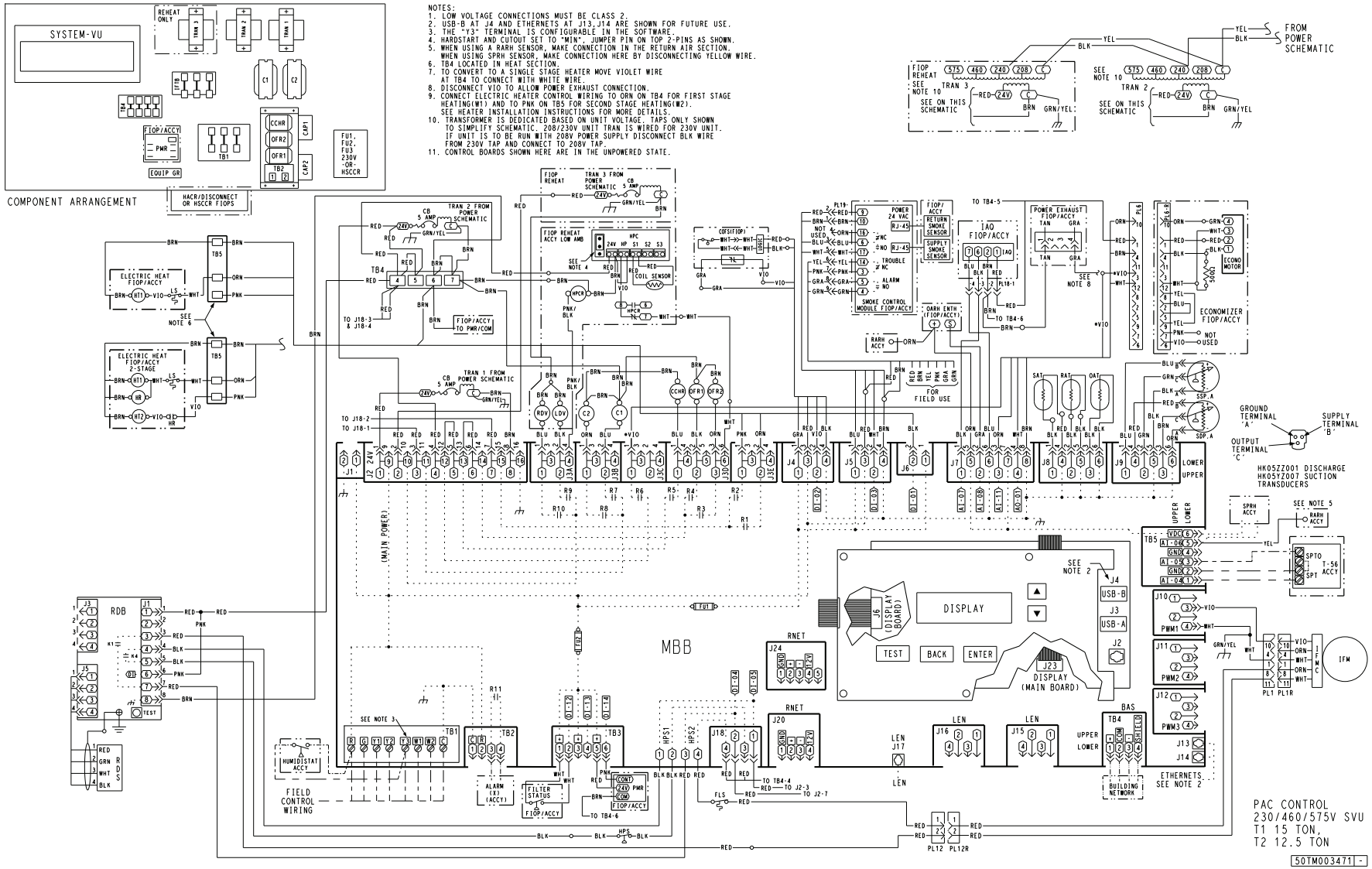

Typical Power Wiring Diagram — 50FE 16 208/230/460-3-60 Unit with Electromechanical Controller

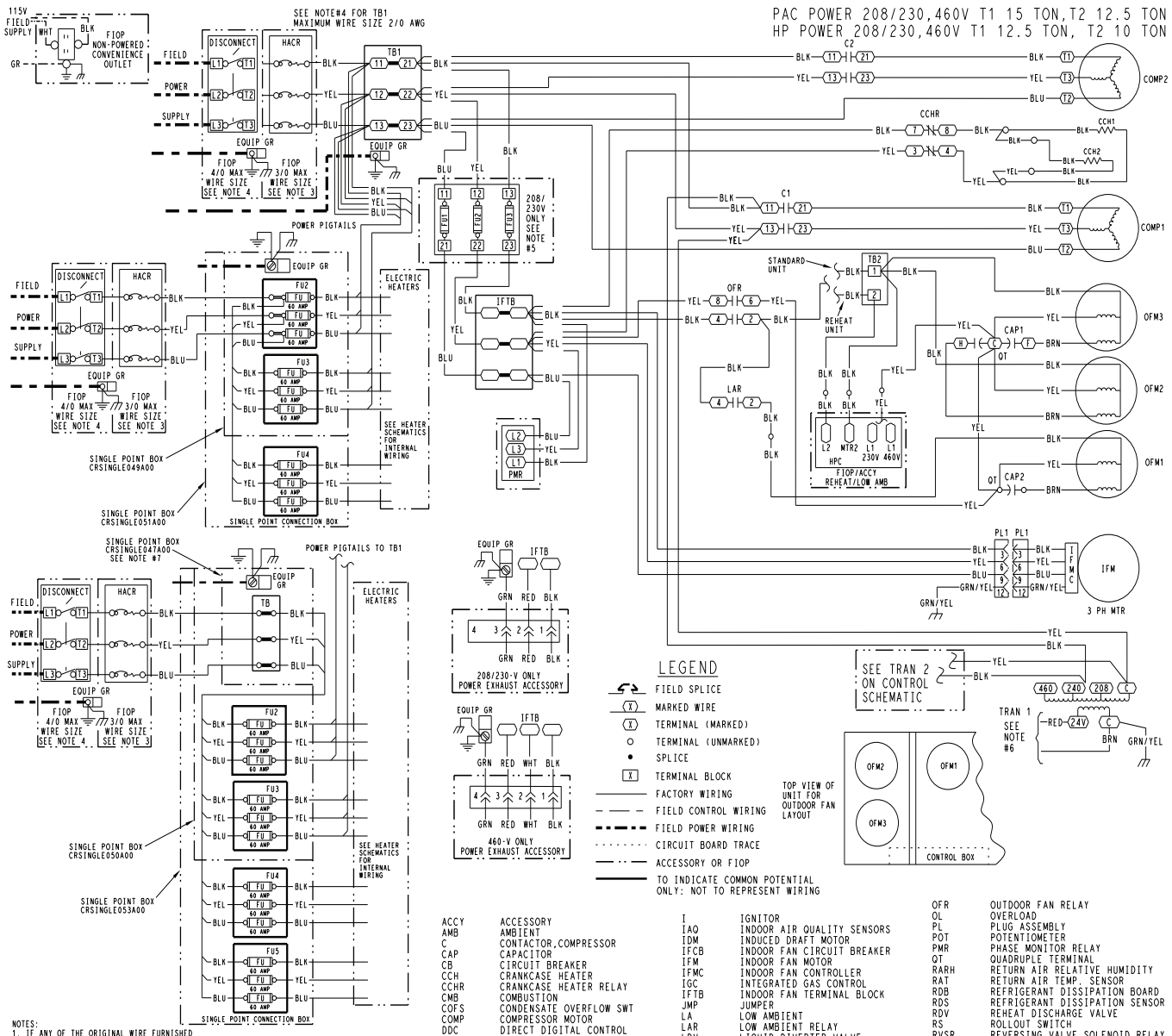

NOTES:
1. IF ANY OF THE ORIGINAL WIRE FURNISHED MUST BE REPLACED, IT MUST BE REPLACED WITH TYPE 90 C WIRE OR ITS EQUIVALENT.
2. COMPRESSOR AND FAN MOTORS ARE THERMALLY PROTECTED. THREE PHASE MOTORS ARE PROTECTED AGAINST PRIMARY SINGLE PHASING CONDITIONS.
3. USE COPPER, COPPER CLAD ALUMINUM OR ALUMINUM CONDUCTORS.
4. USE COPPER CONDUCTORS ONLY.
5. FU1, FU2, AND FU3, REPLACE WITH 250V 60A BUSSMAN FRNR 60.
6. TRANSFORMER IS DEDICATED BASED ON UNIT VOLTAGE. TAPS ONLY SHOWN TO SIMPLIFY SCHEMATIC. 208/230V UNIT TRAN IS WIRED FOR 230V UNIT. IF UNIT IS TO BE RUN WITH 208V POWER SUPPLY DISCONNECT BLK WIRE FROM 230V TAP AND CONNECT TO 200V TAP.
7. CRSINGLE047A00 IS ONLY A TERMINAL BLOCK TO DISTRIBUTE POWER TO THE CONTROL BOX TB1 AND ELECTRIC HEATERS.

ACCY	ACCESSORY
AMB	AMBIENT
C	CONTACTOR,COMPRESSOR
CAP	CAPACITOR
CB	CIRCUIT BREAKER
CCH	CRANKCASE HEATER
CCHR	CRANKCASE HEATER RELAY
CMB	COMBUSTION
COFS	CONDENSATE OVERFLOW SWT
COMP	COMPRESSOR MOTOR
DDC	DIRECT DIGITAL CONTROL
EHR	ELECTRIC HEATER RELAY
ERV	ENERGY RECOVERY VENTILATOR
FIOP	FACTORY INSTALLED OPTION
FLS	FAN LIMIT SWITCH
FPT	FREEZE PROTECTION THERMOSTAT
FSD	FIRE SHUT DOWN
FS	FLAME SENSOR
FU	FUSE
GND	GROUND
GVR	GAS VALVE RELAY
HPC	HEAD PRESSURE CONTROL
HPS	HIGH PRESSURE SWITCH
HS	HALL EFFECT SENSOR
I	IGNITOR
IAQ	INDOOR AIR QUALITY SENSORS
IDM	INDUCED DRAFT MOTOR
IFCB	INDOOR FAN CIRCUIT BREAKER
IFM	INDOOR FAN MOTOR
IFMC	INDOOR FAN CONTROLLER
IGC	INTEGRATED GAS CONTROL
IFTB	INDOOR FAN TERMINAL BLOCK
JMP	JUMPER
LA	LOW AMBIENT
LAR	LOW AMBIENT RELAY
LDV	LIQUID DIVERTER VALVE
LPS	LOW PRESSURE SWITCH
LSM	LIMIT SWITCH (MANUAL RESET)
LS	LIMIT SWITCH
LTLO	LOW TEMPERATURE LOCKOUT
MGV	MAIN GAS VALVE
MOV	VOLTAGE RESTRICTOR
MTR	MOTOR
MTS	MIXED AIR TEMPERATURE SWITCH
OAQ	OUTDOOR AIR QUALITY
OARH	OUTSIDE AIR RELATIVE HUMIDITY
OAT	OUTDOOR AIR TEMP. SENSOR
OFM	OUTDOOR FAN MOTOR
OFR	OUTDOOR FAN RELAY
OL	OVERLOAD
PL	PLUG ASSEMBLY
POT	POTENTIOMETER
PMR	PHASE MONITOR RELAY
QT	QUADRUPLE TERMINAL
RARH	RETURN AIR RELATIVE HUMIDITY
RAT	RETURN AIR TEMP. SENSOR
RDB	REFRIGERANT DISSIPATION BOARD
RDS	REFRIGERANT DISSIPATION SENSOR
RDV	REHEAT DISCHARGE VALVE
RS	ROLLOUT SWITCH
RVSR	REVERSING VALVE SOLENOID RELAY
SAT	SUPPLY AIR TEMP. SENSOR
SEN	SENSOR
SPRH	SPACE RELATIVE HUMIDITY
SPT	SPACE TEMPERATURE SENSOR
SPTO	SPACE TEMPERATURE OFFSET
STD	STANDARD
TB	TERMINAL BLOCK
TBR	TEMPERATURE BYPASS RELAY
TDR	TIME DELAY RELAY(WINTER START)
TRAN	TRANSFORMER
UCB	UNIT CONTROL BOARD

50TM001913 | E

Typical Power Wiring Diagram — 50FE 16 575-3-60 Unit with SystemVu™ Controller

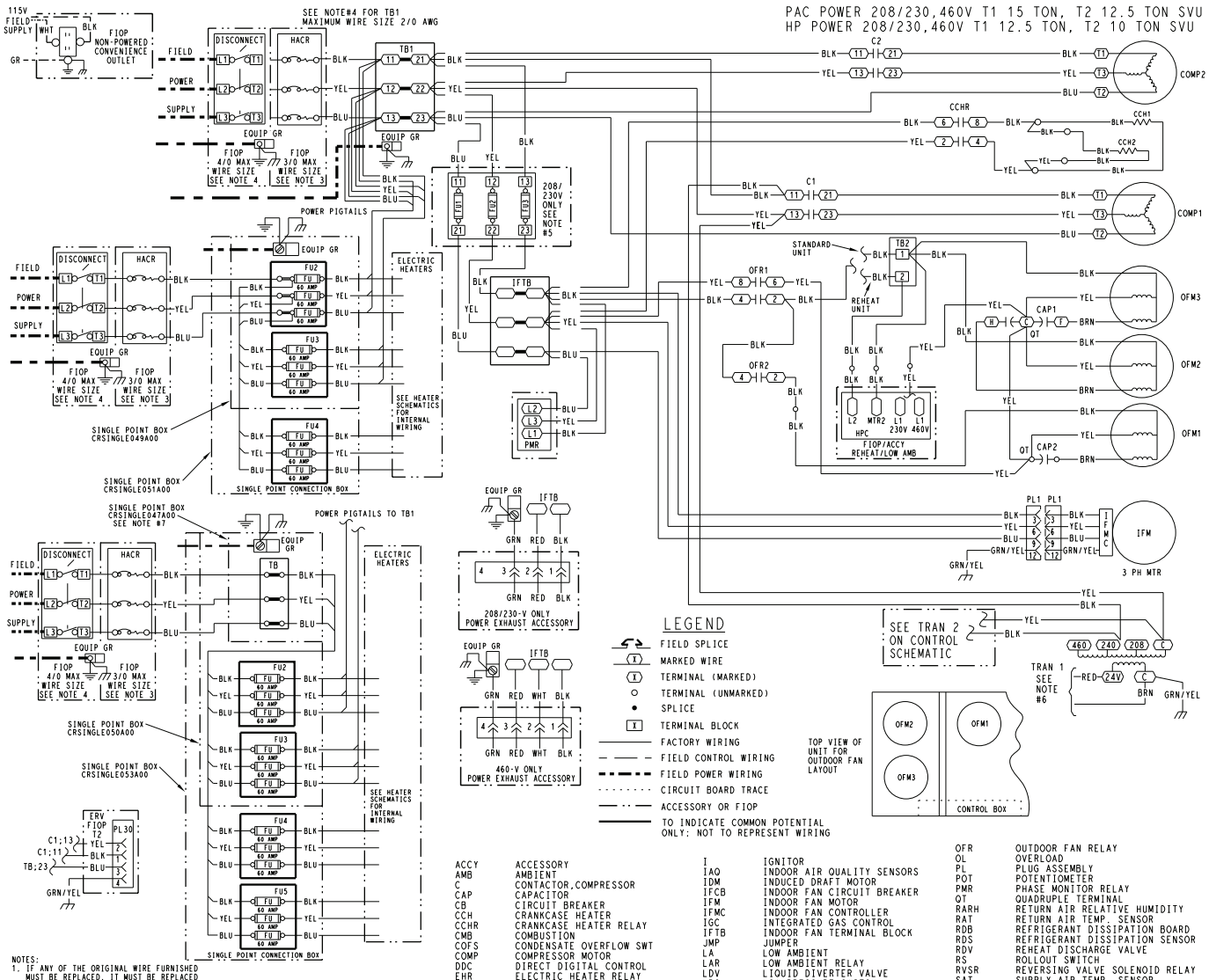

NOTES:
1. IF ANY OF THE ORIGINAL WIRE FURNISHED MUST BE REPLACED, IT MUST BE REPLACED WITH TYPE 90 C WIRE OR ITS EQUIVALENT.
2. COMPRESSOR AND FAN MOTORS ARE THERMALLY PROTECTED. THREE PHASE MOTORS ARE PROTECTED AGAINST PRIMARY SINGLE PHASING CONDITIONS.
3. USE COPPER, COPPER CLAD ALUMINUM OR ALUMINUM CONDUCTORS.
4. USE COPPER CONDUCTORS ONLY.
5. FU1, FU2, AND FU3, REPLACE WITH 250V 60A BUSSMAN FRNR 60.
6. TRANSFORMER IS DEDICATED BASED ON UNIT VOLTAGE. TAPS ONLY SHOWN TO SIMPLIFY SCHEMATIC. 208/230V UNIT TRAN IS WIRED FOR 230V UNIT. IF UNIT IS TO BE RUN WITH 208V POWER SUPPLY DISCONNECT BLK WIRE FROM 230V TAP AND CONNECT TO 200V TAP.
7. CRSINGLE047A00 IS ONLY A TERMINAL BLOCK TO DISTRIBUTE POWER TO THE CONTROL BOX TB1 AND ELECTRIC HEATERS.

ACCY	ACCESSORY
AMB	AMBIENT
C	CONTACTOR,COMPRESSOR
CAP	CAPACITOR
CB	CIRCUIT BREAKER
CCH	CRANKCASE HEATER
CCHR	CRANKCASE HEATER RELAY
CMB	COMBUSTION
COFS	CONDENSATE OVERFLOW SWT
COMP	COMPRESSOR MOTOR
DDC	DIRECT DIGITAL CONTROL
EHR	ELECTRIC HEATER RELAY
ERV	ENERGY RECOVERY VENTILATOR
FIOP	FACTORY INSTALLED OPTION
FLS	FAN LIMIT SWITCH
FPT	FREEZE PROTECTION THERMOSTAT
FSD	FIRE SHUT DOWN
FS	FLAME SENSOR
FU	FUSE
GND	GROUND
GVR	GAS VALVE RELAY
HPC	HEAD PRESSURE CONTROL
HPS	HIGH PRESSURE SWITCH
HS	HALL EFFECT SENSOR
I	IGNITOR
IAQ	INDOOR AIR QUALITY SENSORS
IDM	INDUCED DRAFT MOTOR
IFCB	INDOOR FAN CIRCUIT BREAKER
IFM	INDOOR FAN MOTOR
IFMC	INDOOR FAN CONTROLLER
IGC	INTEGRATED GAS CONTROL
IFTB	INDOOR FAN TERMINAL BLOCK
JMP	JUMPER
LA	LOW AMBIENT
LAR	LOW AMBIENT RELAY
LDV	LIQUID DIVERTER VALVE
LPS	LOW PRESSURE SWITCH
LSM	LIMIT SWITCH (MANUAL RESET)
LS	LIMIT SWITCH
LTLO	LOW TEMPERATURE LOCKOUT
MGV	MAIN GAS VALVE
MOV	VOLTAGE RESTRICTOR
MTR	MOTOR
MTS	MIXED AIR TEMPERATURE SWITCH
OAQ	OUTDOOR AIR QUALITY
OARH	OUTSIDE AIR RELATIVE HUMIDITY
OAT	OUTDOOR AIR TEMP. SENSOR
OFM	OUTDOOR FAN MOTOR
OFR	OUTDOOR FAN RELAY
OL	OVERLOAD
PL	PLUG ASSEMBLY
POT	POTENTIOMETER
PMR	PHASE MONITOR RELAY
QT	QUADRUPLE TERMINAL
RARH	RETURN AIR RELATIVE HUMIDITY
RAT	RETURN AIR TEMP. SENSOR
RDB	REFRIGERANT DISSIPATION BOARD
RDS	REFRIGERANT DISSIPATION SENSOR
RDV	REHEAT DISCHARGE VALVE
RS	ROLLOUT SWITCH
RVSR	REVERSING VALVE SOLENOID RELAY
SAT	SUPPLY AIR TEMP. SENSOR
SEN	SENSOR
SPRH	SPACE RELATIVE HUMIDITY
SPT	SPACE TEMPERATURE SENSOR
SPTO	SPACE TEMPERATURE OFFSET
STD	STANDARD
TB	TERMINAL BLOCK
TBR	TEMPERATURE BYPASS RELAY
TDR	TIME DELAY RELAY(WINTER START)
TRAN	TRANSFORMER
UCB	UNIT CONTROL BOARD

50TM002656 C

Sequence of operation

General

The sequence below describes the sequence of operation for an electromechanical unit with and without a factory-installed EconomizerONE (POL224 controller). For information regarding a direct digital controller, see the start-up, operations, and troubleshooting manual for the applicable controller.

Dissipation

When the factory-installed dissipation system detects a level of refrigerant leak in the unit, a safety dissipation mode will be activated. During this dissipation mode, the thermostat will be disabled and the indoor fan will run at 66% of the maximum speed of the motor. When the refrigerant leak levels are normal for 5 minutes, the unit will return to normal operation.

Electromechanical units without economizer

Cooling (2-stage units)

When the thermostat calls for cooling, terminals G and Y1 are energized. The indoor fan will run at the low fan speed and the C1 compressor contactor (CC) is energized, causing the compressor and outdoor fan to run. The low indoor fan speed is 50% or 60% of the user-set fan speed, depending on unit size.

If additional cooling is needed, then the thermostat will add the call for Y2. This will increase the indoor fan speed to the user-set fan speed and energize the C2 contactor and second compressor for full compressor capacity. The outdoor fan is the same speed for Y1 and Y2.

When the thermostat removes the call for Y2 but leaves the Y1, the indoor fan will slow to the reduced percentage of the user-set fan speed, the C2 contactor will de-energize, the second compressor will turn off, and the outdoor fan will remain on. When the thermostat removes the call for Y1, the compressor contactor will de-energize, shutting down the compressor and the outdoor fan. When the thermostat removes the call for G, the indoor fan will turn off after the specific unit fan off delay.

NOTE: Per ASHRAE 90.1-2019 and IECC-2018 standards, during the first stage cooling operation, the Unit Control Board (UCB) will adjust the fan motor speed to provide 50% or 60% of the total cfm established for the unit.

Gas heating (48FE units)

NOTE: WeatherMaker® units have 2 stages of gas heat.

When the thermostat calls for heating, power is sent to W on the Integrated Gas Controller (IGC) board. An LED (light-emitting diode) on the IGC board turns on and remains on during normal operation. A check is made to ensure that the roll-out switch and limit switch are closed. If the check was successful, then the induced-draft motor is energized, and when its speed is satisfactory, as proven by the flue gas pressure switch, the ignition activation period begins. The burners will ignite within 5 seconds. If the burners do not light, there is a 22 second delay before another 5 second attempt. This sequence is repeated for 15 minutes or until the burners light. If, after the 15 minutes, the burners still have not lit, heating is locked out. To reset the control, break 24-v power to the thermostat.

When ignition occurs, the IGC board will continue to monitor the condition of the roll-out switch, the limit switches, the flue gas pressure switch, and the flame sensor. Forty-five seconds after ignition occurs, assuming the unit is controlled through a room thermostat set for fan auto, the indoor-fan motor will energize (and the outdoor-air dampers will open to their minimum position). If, for some reason, the over-temperature limit opens prior to the start of the indoor fan blower, then the unit will shorten the 45 second delay to 5 seconds less than the time from initiation of heat to when the limit tripped. Gas will not be interrupted to the burners and heating will continue. Once the fan-on delay has been modified, it will not change back to 45 seconds until power is reset to the control. On units with 2 stages of heat, when additional heat is required, W2 closes and initiates power to the second stage of the main gas valve. When the thermostat is satisfied, W1 and W2 open and the gas valve closes, interrupting the flow of gas to the main burners. If the unit is controlled through a room thermostat set for fan auto, then the indoor-fan motor will continue to operate for an additional 45 seconds and then stop. A LED indicator is provided on the IGC to monitor operation.

Electric heating (50FE units)

NOTE: 50FE units are sold as cooling only. If electric heaters are required, use only factory-approved heaters. They will operate as follows.

Units have either 1 or 2 stages of electric heat. When the thermostat calls for heating, power is applied to G and the W1 terminals at the unit. The unit control will energize the indoor fan contactor and the first stage of electric heat. On units with 2-stage heating, when additional heating is required, the second stage of electric heat (if equipped) will be energized when power is applied at the W2 terminal on the unit.

IMPORTANT: The thermostat must be configured for Electric Heat so it will energize G with the W1 call.

Electromechanical units with factory-installed EconomizerONE

When free cooling is not available, the compressors will be controlled by the zone thermostat. When free cooling is available, the outdoor-air damper is modulated by the EconomizerONE control to provide a 50°F (10°C) to 55°F (13°C) mixed-air temperature into the zone. As the mixed air temperature fluctuates above 55°F (13°C) or below 50°F (10°C), dampers will be modulated (open or close) to bring the mixed-air temperature back within control. If mechanical cooling is utilized with free cooling, then the outdoor-air damper will maintain its current position at the time the compressor is started. If the increase in cooling capacity causes the mixed-air temperature to drop below 45°F (7°C), then the outdoor-air damper position will be decreased to the minimum position. If the mixed-air temperature continues to fall, the outdoor-air damper will close. Control returns to normal once the mixed-air temperature rises above 48°F (9°C). The power exhaust fans will be energized and de-energized, if installed, as the outdoor-air damper opens and closes.

If field-installed accessory CO_2 sensors are connected to the EconomizerONE control, then a demand controlled ventilation strategy will begin to operate. As the CO_2 level in the zone increases above the CO_2 setpoint (on the EconomizerONE controller), the minimum position of the damper will be increased proportionally until the Maximum Ventilation setting is reached. As the CO_2 level decreases

because of the increase in fresh air, the outdoor-air damper will follow the higher demand condition from either the DCV mode or from the free cooling mode. For EconomizerONE operation, there must be a thermostat call for the fan (G). If the unit is occupied and the fan is on, then the damper will operate at minimum position. Otherwise, the damper will be closed.

When the EconomizerONE control is in the occupied mode and a call for cooling exists (Y1 on the thermostat), the control will first check for indoor fan operation. If the fan is not on, then cooling will not be activated. If the fan is on, then the control will open the EconomizerONE damper to the minimum position.

On the initial power to the EconomizerONE control, it will take the damper up to 2-1/2 minutes before it begins to position itself. After the initial power-up, further changes in damper position can take up to 90 seconds to initiate. Damper movement from fully closed to fully open (or vice versa) will take between 1-1/2 and 2-1/2 minutes. If free cooling can be used, as determined from the appropriate changeover command (dry bulb, outdoor enthalpy, differential dry bulb, or differential enthalpy), then the control will modulate the dampers open and closed to maintain the mixed-air temperature setpoint at 50°F (10°C) to 55°F (13°C). If there is a further demand for cooling (cooling second stage — Y2 is energized), then the control will bring on compressor stage 1 to maintain the mixed-air temperature setpoint. The EconomizerONE damper will be open at maximum position.

NOTE: For 2-speed units, the EconomizerONE controller will adjust the damper position as the Indoor Fan Speed changes, per its configured values.

Heating

The sequence of operation for heating is the same as for an electromechanical unit without an economizer. The only difference is how the economizer acts. The economizer will stay at the Economizer Minimum Position while the evaporator fan is operating. The outdoor-air damper is closed when the indoor fan is not operating. Refer to the unit's service and maintenance manual for further details.

Optional Humidi-MiZer® dehumidification system

Units with the factory-installed Humidi-MiZer system option are capable of providing multiple modes of improved dehumidification as a variation of the normal cooling cycle. The Humidi-MiZer system option includes additional valves in the liquid line and discharge line of each refrigerant circuit, a small reheat condenser coil downstream of the evaporator, and variable-speed control of some or all outdoor fans. Operation of the revised refrigerant circuit for each mode is described below.

The Humidi-MiZer system provides 3 sub-modes of operation: Cool, Reheat1, and Reheat2.

Cool — provides a normal ratio of sensible and latent cooling effect from the evaporator coil.

Reheat1 — provides increased latent cooling while slightly reducing the sensible cooling effect.

Reheat2 — provides normal latent cooling but with null or minimum sensible cooling effect delivered to the space.

The Reheat1 and Reheat2 modes are available when the unit is not in a heating mode and when the low ambient lockout switch is closed.

Refer to the figures on the next page for piping flow diagrams.

SystemVu™ controller (factory option)

For details on operating 48/50FE units equipped with the factory-installed SystemVu controller option, refer to *FE/GE Series Single Package Rooftop Units with SystemVu Controller Controls, Start-Up, Operation and Troubleshooting* manual.

Normal Cooling Mode

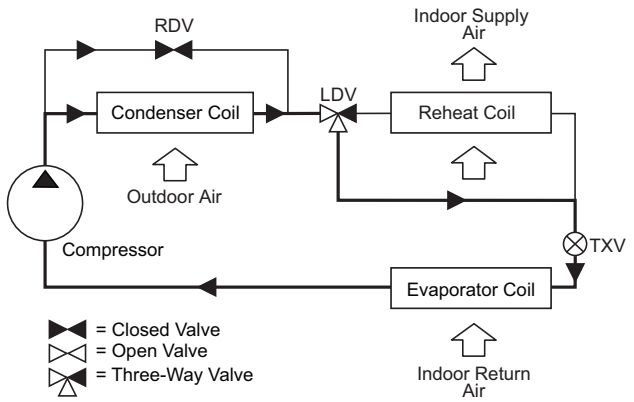

Subcooling Mode (Reheat1)

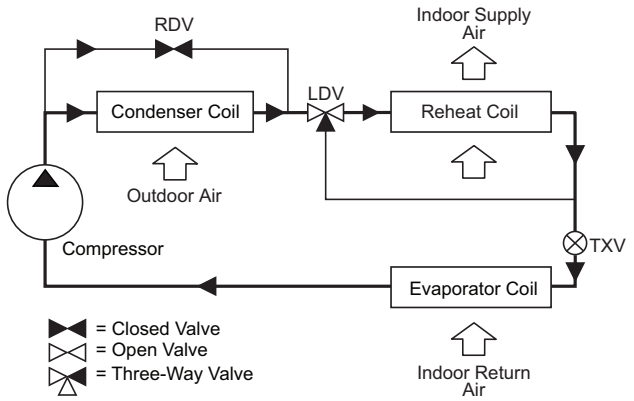

Hot Gas Reheat Mode (Reheat2)

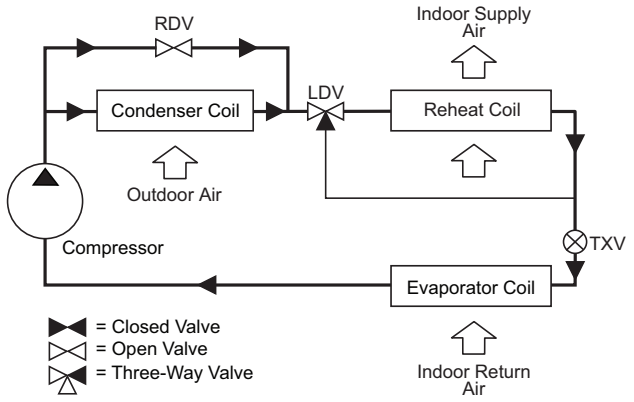

LEGEND

RDV — Reheat Discharge Valve
TWV — Three-Way Valve
TXV — Thermostatic Expansion Valve

Minimum operating ambient temperature (cooling)

In mechanical cooling mode, your Carrier rooftop unit can safely operate down to an outdoor ambient temperature of 40°F (4°C) [0°F (–18°C) for size 14 models]. It is possible to provide cooling at lower outdoor ambient temperatures by using less outside air, economizers, and/or accessory low ambient kits.

Maximum operating ambient temperature (cooling)

The maximum operating ambient temperature for cooling mode is 115°F (46°C) except for size 14 models with 120°F (49°C). While cooling operation above 115°F (46°C) may be possible, it could cause reduced performance, reduced reliability, or a protective action by the unit's internal safety devices.

Multiple motor and drive packages

Some applications need larger horsepower motors, some need more airflow, and some need both. Regardless of the case, your Carrier expert has a factory installed combination to meet your application. A wide selection of motors are available, factory installed, to handle nearly any application.

Stainless steel heat exchanger (48FE units only)

For this option, the tubular heat exchanger is made out of a minimum 20 gauge type 409 stainless steel for applications where the mixed air to the heat exchanger is expected to drop below 45°F (7°C). Stainless steel may be specified on applications where the presence of airborne contaminants require its use (applications such as paper mills) or in area with very high outdoor humidity that may result in severe condensation in the heat exchanger during cooling operation.

Minimum mixed air temperature (heating) (48FE units only)

Using the factory settings, the minimum temperatures for mixed air (the combined temperature of the warm return air and the cold outdoor air) entering the dimpled gas heat exchangers are shown in the following table.

Minimum Temperature for Mixed Air Temperature

ALUMINIZED	STAINLESS STEEL
50°F (10°C) Continuous	40°F (4°C) Continuous
45°F (7°C) Intermittent	35°F (2°C) Intermittent

Operating at lower mixed-air temperatures may be possible if a field-supplied, outdoor-air thermostat initiates both heat stages when the temperature is less than the minimum temperatures listed above. Please contact your local Carrier representative for assistance.

Minimum and maximum airflow (heating and cooling)

To maintain safe and reliable operation of your rooftop, operate within the heating airflow limits during heating mode and cooling airflow limits during cooling mode. Operating above the maximum may cause blow-off, undesired airflow noise, or airflow-related problems with the rooftop unit. Operating below the minimum may cause problems with coil freeze-up and unsafe heating operation.

Heating and cooling limitations differ when evaluating operating cfm. The minimum value is the HIGHER of the cooling and heating minimum cfm values published on page 8 and the maximum value is the LOWER of the cooling and heating maximum values published on page 8.

Heating-to-cooling changeover

Your unit will automatically change from heating to cooling mode when using a thermostat with an auto-changeover feature.

Airflow

All units are draw-through in cooling mode and blow-through in heating mode.

Outdoor air application strategies

Economizers reduce operating expenses and compressor run time by providing a free source of cooling and a means of ventilation to match changing needs. In fact, they should be considered for most applications. Also, consider the various economizer control methods and their benefits, as well as sensors required to accomplish your application goals. Please contact your local Carrier representative for assistance.

Motor limits, brake horsepower (bhp)

Due to the internal design of Carrier units, the air path, and specially designed motors, the full horsepower (maximum continuous bhp) band, as listed in the Fan Performance tables, can be used with the utmost confidence. There is no need for extra safety factors, as Carrier motors are designed and rigorously tested to use the entire listed bhp range without either nuisance tripping or premature motor failure.

Propane heating (48FE units only)

Propane has different physical qualities than natural gas. As a result, propane requires a different fuel to air mixture. To optimize the fuel/air mixture for propane, Carrier sells different burner orifices in an easy-to-install accessory kit. To select the correct burner orifices or determine the heat capacity for a propane application, use either the selection software or the unit's service manual.

High altitude heating

High altitudes have less oxygen, which affects the fuel/air mixture in heat exchangers. In order to maintain a proper fuel/air mixture, heat exchangers operating in altitudes above 2000 ft (610 m) require different orifices. To select the correct burner orifices or determine the heat capacity for a high altitude application, use either the selection software or the unit's service manual.

High altitudes have less oxygen, which means heat exchangers need less fuel. The new gas orifices in Carrier's field-installed kit make the necessary adjustment for high altitude applications. They restore the optimal fuel to air mixture and maintain healthy combustion at altitudes above 2000 ft (610 m).

NOTE: Typical natural gas heating value ranges from 975 to 1050 Btu/ft^3 at sea level nationally. The heating value goes down approximately 1.7% per every thousand feet of elevation. Standard factory orifices can typically be used up to 2000 ft (610 m) elevation without any operational issues.

Sizing a rooftop

Bigger is not necessarily better — while an air conditioner needs to have enough capacity to meet the design loads, it does not need excess capacity. In fact, excess capacity typically results in very poor part load performance and humidity control.

Using higher design temperatures than ASHRAE recommends for your location and adding "safety factors" to the calculated load are both signs of oversizing. Oversizing an air conditioner leads to poor humidity control, reduced efficiency, higher utility bills, larger indoor temperature swings, excessive noise, and increased wear and tear on the air conditioner.

Rather than oversizing an air conditioner, engineers should "right-size" or even slightly "under-size" air conditioners. Correctly sizing an air conditioner controls humidity better, promotes efficiency, reduces utility bills, extends equipment life, and maintains even, comfortable temperatures. Please contact your local Carrier representative for assistance.

Low ambient applications

The optional Carrier economizer can adequately cool your space by bringing in fresh, cool outside air. In fact, when a unit is equipped with an economizer, accessory low-ambient kit may not be necessary. In low ambient conditions, unless the outdoor air is excessively humid or contaminated, economizer-based "free cooling" is the preferred, less costly, and energy-conscious method. In low ambient applications where outside air might not be desired (such as contaminated or excessively humid outdoor environments), your Carrier rooftop can operate to ambient temperatures down to 0°F (–18°C) using the recommended accessory low ambient controller.

Guide specifications — 48FE

Note about this specification:
This specification is in the "Masterformat" as published by the Construction Specification Institute. Please feel free to copy this specification directly into your building spec.

Gas Heat/Electric Cooling Packaged Rooftop

HVAC Guide Specifications

Size Range: **7.5 to 15 Nominal Tons**

Carrier Model Number: **48FE**08-16**

Part 1 — (23 06 80) Schedules for Decentralized HVAC Equipment

1.01 (23 06 80.13) Decentralized Unitary HVAC Equipment Schedule

A. (23 06 80.13.A.) Rooftop Unit (RTU) Schedule:

1. Schedule is per the project specification requirements.

Part 2 — (23 07 16) HVAC Equipment Insulation

2.01 (23 07 16.13) Decentralized, Rooftop Units:

A. (23 07 16.13.A.) Evaporator Fan Compartment:

1. Interior cabinet surfaces shall be insulated with a minimum 1/2 in. thick, minimum 1-1/2 lb density, flexible fiberglass insulation bonded with a phenolic binder, neoprene coated on the air side.
2. Insulation and adhesive shall meet NFPA 90A requirements for flame spread and smoke generation.

B. (23 07 16.13.B.) Gas Heat Compartment:

1. Aluminum foil-faced fiberglass insulation shall be used.
2. Insulation and adhesive shall meet NFPA 90A requirements for flame spread and smoke generation.

Part 3 — (23 09 13) Instrumentation and Control Devices for HVAC

3.01 (23 09 13.23) Sensors and Transmitters

A. (23 09 13.23.A.) Thermostats:

1. Thermostat must:
   a. energize both "W" and "G" when calling for heat.
   b. have capability to energize 1 or 2 stages of cooling, and 2 different stages of heating.
   c. include capability for occupancy scheduling.

Part 4 — (23 09 23) Direct Digital Control system for HVAC

4.01 (23 09 23.13) Decentralized, Rooftop Units:

A. (23 09 23.13.A.) SystemVu™ intelligent integrated Direct Digital Control (DDC) shall provide:

1. Integrated unit operation for comfort cooling, heating ventilation as well as all monitoring, recording and reporting capabilities. Controller shall also provide diagnostics and alarms of abnormal unit operation through the controller. Controller shall have an intuitive user display and be able to be used in a standalone operation or via building automation system (BAS).
2. Quick Unit Status LEDs of: RUN — meaning all systems are go, ALERT — that indicates there is currently a non-critical issue with the unit, like filters need to be replaced and FAULT — that indicates the unit has a critical issue and will possibly shut down.
3. Six large navigation keys for easy access. Navigation keys shall consist of: TEST, BACK, ENTER, and MENU along with UP and DOWN arrows.
4. Full back lit user display with 4 line by 30 character text capabilities. Display menu shall be designed to provide guided major menus and sub menus main menus provided below:
   a. Shutdown Unit
   b. Run Status
   c. Settings
   d. Alerts/Faults
   e. Service
   f. Inputs
   g. Outputs
   h. USB
5. The capability for standalone operation with conventional thermostat/sensor or use with building automation systems (BAS) of Carrier i-Vu®, BACnet®[1] MS/PT and Carrier Comfort Network® (CCN) systems. No special modules or boards are required for these capabilities. Has the capability to work with Equipment Touch™ and System Touch™ devices and ZS Sensors.
6. The ability to read refrigerant pressures at display or via BAS network of Discharge Pressure and Suction Pressure. The need for traditional refrigerant gauges is not required.
7. USB Data Port for flash drive interaction. This will allow the transfer of data for uploads, downloads, perform software upgrades, back-up and restore data and file transfer data such as component number of starts and run hours.
8. Reverse Rotation Protection of compressors if field 3-phase wiring is misapplied.

1. Third-party trademarks and logos are the property of their respective owners.

9. Provide Service Capabilities of:
   a. Auto run test
   b. Manual run test
   c. Component run hours and starts
   d. Commissioning reports
   e. Data logging
   f. Alarm history
10. Economizer control and diagnostics. Set up economizer operation, receive feedback from actuator. Also meets the most recent California Title 24, ASHRAE®[1] 90.1 and IECC®[1] Fault Detection and Diagnostic (FDD) requirements.
11. Unit cooling operation down to 40°F (4°C).
12. Controller shall have easy access connections around the controller perimeter area and consist of Mate-N-Lok, terminal block and RJ style modular jack connections.
13. 365 day real time clock, 20 holiday schedules along with occupied and unoccupied scheduling.
14. Auto-Recognition for easy installation and commissioning of devices like economizers, space sensors etc.
15. A 5°F (3°C) temperature difference between cooling and heating setpoints to meet the latest ASHRAE 90.1 Energy Standard.
16. Return air sensor, supply air sensor and outdoor air sensor to help monitor and provide data for the unit comfort operation, diagnostic and alarms.
17. Use of Carrier's field accessory Equipment Touch and System Touch devices.
18. Units with the factory-installed Humidi-MiZer® system option are capable of providing multiple modes of improved dehumidification as a variation of the normal cooling cycle.
19. Supply Air Tempering control operates the gas or electric heat to maintain a minimum supply air temperature during conditions where very cold outdoor air causes the supply air temperature to fall below the configured Supply Air Tempering Setpoint. This occurs during periods where DCV is active and increasing the amount of outdoor air or in cases where the system is operating at very low airflow and the calculated economizer position has increased to maintain a constant ventilation rate.
20. Demand limiting in SystemVu™ is achieved through setpoint expansion. The systems heating and cooling setpoints are expanded in steps or levels. The degree to which the setpoints may be expanded is defined by the 6 demand level offsets and the 2 commanded demand limit levels.
21. 3-year limited part warranty.

1. Third-party trademarks and logos are the property of their respective owners.

Part 5 — (23 09 33) Electric and Electronic Control System for HVAC

5.01 (23 09 33.13) Decentralized, Rooftop Units:

A. (23 09 33.13.A.) General:
   1. Shall be complete with self-contained low-voltage control circuit protected by a resettable circuit breaker on the 24-v transformer side. Transformer shall have 75VA capability.
   2. Shall utilize color-coded wiring.
   3. Shall include a Unit Control Board to conveniently and safely provide connection points for vital control functions such as: smoke detectors, phase monitor, gas controller, economizer, thermostat, DDC control options, and low and high pressure switches. Controller shall also provide an intuitive means to adjust the indoor fan speed through a simple switch and pot adjustment design.
   4. The heat exchanger shall be controlled by an integrated gas controller (IGC) microprocessor. See heat exchanger section of this specification.
   5. Unit shall include a minimum of one 8-pin screw terminal connection board for connection of control wiring.

B. (23 09 33.13.B.) Safeties:
   1. Compressor over-temperature, over-current. High internal pressure differential.
   2. Low Pressure Switch

      Low pressure switch shall use different color wire than the high pressure switch. The purpose is to assist the installer and service technician to correctly wire and or troubleshoot the rooftop unit.
   3. High Pressure Switch

      High pressure switch shall use different color wire than the low pressure switch. The purpose is to assist the installer and service technician to correctly wire and or troubleshoot the rooftop unit.
   4. Mixed Air Auto Reset Temperature Switch:
      a. All cooling units contain a low return air (or mixed air - depending on unit configuration) temperature switch for compressor protection. The switch prevents compressor operation at mixed air temperatures below 60°F (15°C) to ensure long term reliability but allows continued fan and economizer operation (if in-stalled). The switch will automatically reset when the return/mixed air temperature warms above 65°F (18°C) and will allow compressor operation to continue.
   5. Automatic reset, motor thermal overload protector.
   6. Heating section shall be provided with the following minimum protections:
      a. High temperature limit switches.
      b. Induced draft motor pressure switch.

c. Flame rollout switch.
d. Flame proving controls.

7. A2L Refrigerant Leak Dissipation System (Electromechanical):
   a. Leak dissipation system shall consist of control board and A2L sensor certified to UL-60335-2-40.
   b. System shall be designed for the life of the unit.
   c. Dissipation system shall be automatic, ship pre-wired, and require no additional field connections to thermostat to function.
   d. Refrigerant leak sensor shall be installed in UL-certified location and orientation. Sensor shall be self-correcting and resettable. Single use refrigerant leak sensor shall not be permitted.
   e. Factory-installed dissipation controller shall use onboard microprocessor and include:
      1) Automatic reset after a dissipation event has occurred.
      2) Onboard LED with flash code to indicate current unit status and hardware failures.
      3) Depressible "Test" button to allow for a system test and recall/reset of leak detection history.
      4) 24-v dry contact alarm terminal to allow for external notification of leak detection.
   f. Dissipation control board shall be accessible via normal maintenance locations and LED shall be visible.
   g. Dissipation system shall "Fail Safe" per UL requirements.
   h. Dissipation shall allow smoke and building fire systems to override in case of event.
8. A2L Refrigerant Leak Dissipation System (SystemVu):
   a. Leak dissipation system shall consist of control board and A2L sensor certified to UL-60335-2-40, integrated with SystemVu controller.
   b. System shall be designed for the life of the unit.
   c. Dissipation system shall be automatic, ship pre-wired, and require no additional field connections to function.
   d. Refrigerant leak sensor shall be installed in UL-certified location and orientation. Sensor shall be self-correcting and resettable. Single use refrigerant leak sensor shall not be permitted.
   e. Factory-installed dissipation system shall use onboard microprocessor and include:
      1) Automatic leak detection and dissipation algorithm.
      2) Automatic reset after a dissipation event has occurred.
      3) Onboard LED with flash code to indicate current unit status and hardware failures.
      4) Depressible "Test" button to allow for a system test and recall/reset of leak detection history.
      5) 24-v dry contact alarm terminal on dissipation control board to allow for external notification of leak detection.
      6) Ability to notify BAS system of dissipation event via readable alarm point through SystemVu.
      7) Recallable dissipation alarm history on SystemVu controller.
   f. Dissipation control board shall be accessible via normal maintenance locations and LED shall be visible.
   g. Dissipation system shall "Fail Safe" per UL requirements.
   h. Dissipation shall allow smoke and building fire systems to override in case of event.

Part 6 — (23 09 93) Sequence of Operations for HVAC Controls

6.01 (23 09 93.13) Decentralized, Rooftop Units:
A. (23 09 93.13.A.) INSERT SEQUENCE OF OPERATION

Part 7 — (23 40 13) Panel Air Filters

7.01 (23 40 13.13) Decentralized, Rooftop Units:
A. (23 40 13.13.A.) Standard Filter Section:
1. Shall consist of factory installed, low velocity, disposable 2 in. thick fiberglass filters of commercially available sizes.
2. Unit shall use only one filter size. Multiple sizes are not acceptable.
3. Filters shall be accessible through an access panel with "no-tool" removal as described in the unit cabinet section of this specification (23 81 19.13.G).

Part 8 — (23 81 19) Self-Contained Air Conditioners

8.01 (23 81 19.13) Small-Capacity Self-Contained Air Conditioners:
A. (23 81 19.13.A.) General:
1. Outdoor, rooftop mounted, electrically controlled, heating and cooling unit utilizing a fully hermetic scroll compressors for cooling duty and gas combustion for heating duty.
2. Factory assembled, single-piece heating and cooling rooftop unit. Contained within the unit enclosure shall be all factory wiring, piping, controls, and special features required prior to field start-up.
3. Unit shall use Puron Advance™ (R-454B) refrigerant.
4. Unit shall be installed in accordance with the manufacturer's instructions.

5. Unit must be selected and installed in compliance with local, state, and federal codes.

B. (23 81 19.13.B.) Quality Assurance:
1. Unit meets DOE and ASHRAE 90.1 minimum efficiency requirements.
2. Unit shall be rated in accordance with AHRI Standards 340/360.
3. Unit shall be designed to conform to ASHRAE 15.
4. Unit shall be UL-tested and certified in accordance with ANSI Z21.47 Standards and UL-listed and certified under Canadian standards as a total package for safety requirements.
5. Insulation and adhesive shall meet NFPA 90A requirements for flame spread and smoke generation.
6. Unit casing shall be capable of withstanding 500 hour salt spray exposure per ASTM B117 (scribed specimen).
7. Unit shall be designed in accordance with ISO 9001, and shall be manufactured in a facility registered by ISO 9001:2015.
8. Roof curb shall be designed to conform to NRCA Standards.
9. Unit shall be subjected to a completely automated run test on the assembly line. The data for each unit will be stored at the factory, and must be available upon request.
10. Unit shall be designed in accordance with UL Standard 60335-1 and 60335-2-40, including testing to withstand rain. Unit shall be IPX4 rated.
11. Unit shall be constructed to prevent intrusion of snow and tested to prevent snow intrusion into the control box up to 40 mph.
12. Unit shake tested to assurance level 1, ASTM D4169 to ensure shipping reliability.

C. (23 81 19.13.C.) Delivery, Storage, and Handling:
1. Unit shall be stored and handled per manufacturer's recommendations.
2. Lifted by crane requires either shipping top panel or spreader bars.
3. Unit shall only be stored or positioned in the upright position.

D. (23 81 19.13.D.) Project Conditions:
1. As specified in the contract.

E. (23 81 19.13.E.) Operating Characteristics:
1. Unit shall be capable of starting and running at 115°F (46°C) ambient outdoor temperature, meeting maximum load criteria of AHRI Standard 340/360 at ±10% voltage.
2. Compressor with standard controls shall be capable of operation down to 40°F (4°C) ambient outdoor temperatures. Accessory winter start kit is necessary if mechanically cooling at ambient temperatures down to 25°F (–4°C).
3. Unit shall discharge supply air vertically or horizontally as shown on contract drawings.
4. Unit shall be factory configured for vertical supply and return configurations.
5. Unit shall be field convertible from vertical to horizontal airflow on all models. No special kit required except on 16 size models that require a Supply Duct Kit field installed for horizontal air flow.
6. Unit shall be capable of mixed operation: vertical supply with horizontal return or horizontal supply with vertical return.

F. (23 81 19.13.F.) Electrical Requirements:
1. Main power supply voltage, phase, and frequency must match those required by the manufacturer.

G. (23 81 19.13.G.) Unit Cabinet:
1. Unit cabinet shall be constructed of galvanized steel, and shall be bonderized and coated with a prepainted baked enamel finish on all externally exposed surfaces.
2. Unit cabinet exterior paint shall be: film thickness, (dry) 0.003 inches minimum, gloss (per ASTM D523, 60°F/16°C): 60, Hardness: H-2H Pencil hardness.
3. Evaporator fan compartment interior cabinet insulation shall conform to AHRI Standards 340/360 minimum exterior sweat criteria. Interior surfaces shall be insulated with a minimum 1/2 in. thick, 1 lb density, flexible fiberglass insulation, neoprene coated on the air side. Aluminum foil-faced fiberglass insulation shall be used in the heat compartment.
4. Base of unit shall have a minimum of 4 locations for thru-the-base gas and electrical connections (factory-installed or field-installed), standard.
5. Base Rail:
   a. Unit shall have base rails on a minimum of 2 sides.
   b. Holes shall be provided in the base rails for rigging shackles to facilitate maneuvering and overhead rigging.
   c. Holes shall be provided in the base rail for moving the rooftop by fork truck.
   d. Base rail shall be a minimum of 16 gauge thickness.
6. Condensate Pan and Connections:
   a. Shall be a sloped condensate drain pan made of a corrosion resistant material.
   b. Shall comply with ASHRAE Standard 62.
   c. Shall use a 3/4 in. 14 NPT drain connection, possible either through the bottom or side of the drain pan. Connection shall be made per manufacturer's recommendations.

7. Top Panel:
   a. Shall be a single piece top panel on 08-14 models and 2 piece on 16 size models.
8. Gas Connections:
   a. All gas piping connecting to unit gas valve shall enter the unit cabinet at a single location on side of unit (horizontal plane).
   b. Thru-the-Base Capability:
      1) Standard unit shall have a thru-the-base gas-line location using a raised, embossed portion of the unit basepan.
      2) Optional, factory approved, water-tight connection method must be used for thru-the-base gas connections.
      3) No basepan penetration, other than those authorized by the manufacturer, is permitted.
9. Electrical Connections:
   a. All unit power wiring shall enter unit cabinet at a single, factory prepared, knockout location.
   b. Thru-the-Base Capability:
      1) Standard unit shall have a thru-the-base electrical location(s) using a raised, embossed portion of the unit basepan.
      2) Optional, factory approved, water-tight connection method must be used for thru-the-base electrical connections.
      3) No basepan penetration, other than those authorized by the manufacturer, is permitted.
10. Component Access Panels (standard):
   a. Cabinet panels shall be easily removable for servicing.
   b. Unit shall have one factory installed, toolless, removable, filter access panel.
   c. Panels covering control box, indoor fan, indoor fan motor, gas components (where applicable), and compressors shall have molded composite handles.
   d. Handles shall be UV modified, composite. They shall be permanently attached, and recessed into the panel.
   e. Screws on the vertical portion of all removable access panel shall engage into heat resistant, molded composite collars.
   f. Collars shall be removable and easily replaceable using manufacturer recommended parts.

H. (23 81 19.13.H.) Gas Heat:
1. General:
   a. Heat exchanger shall be an induced draft design. Positive pressure heat exchanger designs shall not be allowed.
   b. Shall incorporate a direct-spark ignition system and redundant main gas valve.
   c. Gas supply pressure at the inlet to the rooftop unit gas valve must match that required by the manufacturer.
2. The heat exchanger shall be controlled by an integrated gas controller (IGC) microprocessor.
   a. IGC board shall notify users of fault using an LED (light-emitting diode).
   b. The LED shall be visible without removing the control box access panel.
   c. IGC board shall contain algorithms that modify evaporator fan operation to prevent future cycling on high temperature limit switch.
   d. Unit shall be equipped with anti-cycle protection with one short cycle on unit flame rollout switch or 4 continuous short cycles on the high temperature limit switch. Fault indication shall be made using an LED.
3. Standard Heat Exchanger Construction:
   a. Heat exchanger shall be of the tubular-section type constructed of a minimum of 20-gauge steel coated with a nominal 1.2 mil aluminum-silicone alloy for corrosion resistance.
   b. Burners shall be of the in-shot type constructed of aluminum-coated steel.
   c. Burners shall incorporate orifices for rated heat output up to 2000 ft (610 m) elevation. Additional accessory kits may be required for applications above 2000 ft (610 m) elevation, depending on local gas supply conditions.
   d. Each heat exchanger tube shall contain multiple dimples for increased heating effectiveness.
4. Optional Stainless Steel Heat Exchanger Construction:
   a. Use energy saving, direct-spark ignition system.
   b. Use a redundant main gas valve.
   c. Burners shall be of the in-shot type constructed of aluminum-coated steel.
   d. All gas piping shall enter the unit cabinet at a single location on side of unit (horizontal plane).
   e. The optional stainless steel heat exchanger shall be of the tubular-section type, constructed of a minimum of 20-gauge type 409 stainless steel.
   f. Type 409 stainless steel shall be used in heat exchanger tubes and vestibule plate.
   g. Complete stainless steel heat exchanger allows for greater application flexibility.
5. Induced Draft Combustion Motor and Blower:
   a. Shall be a direct-drive, single inlet, forward-curved centrifugal type.

b. Shall be made from steel with a corrosion resistant finish.

c. Shall have permanently lubricated sealed bearings.

d. Shall have inherent thermal overload protection.

e. Shall have an automatic reset feature.

I. (23 81 19.13.I.) Coils:

1. Standard Aluminum Fin-Copper Tube Coils:

a. Standard evaporator and condenser coils shall have aluminum lanced plate fins mechanically bonded to seamless internal helically grooved copper tubes with all joints brazed.

b. Evaporator coils shall be leak tested to 150 psig, pressure tested to 450 psig, and qualified to UL 60335-2-40 burst test at 1775 psig.

c. Condenser coils shall be leak tested to 150 psig, pressure tested to 650 psig, and qualified to UL 60335-2-40 burst test at 1980 psig.

2. Optional Pre-coated Aluminum-Fin Condenser Coils:

a. Shall have a durable epoxy-phenolic coating to provide protection in mildly corrosive coastal environments.

b. Coating shall be applied to the aluminum fin stock prior to the fin stamping process to create an inert barrier between the aluminum fin and copper tube.

c. Epoxy-phenolic barrier shall minimize galvanic action between dissimilar metals.

d. Corrosion durability of fin stock shall be confirmed through testing to be no less than 1000 hours salt spray per ASTM B117.

e. Corrosion durability of fin stock shall be confirmed through testing to have no visible corrosion after 48 hour immersion in a room temperature solution of 5% salt, 1% acetic acid.

f. Fin stock coating shall pass 2000 hours of the following: one week exposure in the prohesion chamber followed by one week of accelerated ultraviolet light testing. Prohesion chamber: the solution shall contain 3.5% sodium chloride and 0.35% ammonium sulfate. The exposure cycle is one hour of salt fog application at ambient followed by one hour drying at 95°F (35°C).

3. Optional Copper-Fin Evaporator and Condenser Coils:

a. Shall be constructed of copper fins mechanically bonded to copper tubes and copper tube sheets.

b. Galvanized steel tube sheets shall not be acceptable.

c. A polymer strip shall prevent coil assembly from contacting the sheet metal coil pan to minimize potential for galvanic corrosion between coil and pan.

4. Optional E-coated Aluminum-Fin Evaporator and Condenser Coils:

a. Shall have a flexible epoxy polymer coating uniformly applied to all coil surface areas without material bridging between fins.

b. Coating process shall ensure complete coil encapsulation of tubes, fins and headers.

c. Color shall be high gloss black with gloss per ASTM D523.

d. Uniform dry film thickness from 0.8 to 1.2 mil on all surface areas including fin edges.

e. Superior hardness characteristics of 2H per ASTM D3363 and cross-hatch adhesion of 4B-5B per ASTM D3359.

f. Impact resistance shall be up to 160 in. lb (ASTM D2794).

g. Humidity and water immersion resistance shall be up to minimum 1000 and 250 hours respectively (ASTM D2247 and ASTM D870).

h. Corrosion durability shall be confirmed through testing to be no less than 1000 hours salt spray per ASTM B117.

J. (23 81 19.13.J.) Refrigerant Components:

1. Refrigerant circuit shall include the following control, safety, and maintenance features:

a. Thermostatic Expansion Valve (TXV) shall help provide optimum performance across the entire operating range. Shall contain removable power element to allow change out of power element and bulb without removing the valve body.

b. Refrigerant filter drier, solid core design with pre and post-filter service gauge connections for filter diagnostics and maintenance.

c. Service gauge connections on suction and discharge lines.

d. Pressure gauge access through a specially designed access port in the top panel of the unit.

2. There shall be gauge line access port in the skin of the rooftop:

a. The gauge access port shall enable maintenance personnel to route their pressure gauge lines.

b. This gauge access port shall facilitate correct and accurate condenser pressure readings by enabling the reading with the compressor access panel on.

3. Compressors:
   a. Unit shall use tandem scroll compressor assembly on a single refrigeration circuit with two stages of cooling for efficient comfort cooling operation.
   b. Evaporator coils shall be a full active design to help better control latent removal and minimize unconditioned bypass air.
   c. Compressor motors shall be cooled by refrigerant gas passing through motor windings.
   d. Compressors shall be internally protected from high discharge temperature conditions.
   e. Compressors shall be protected from an over-temperature and over-amperage conditions by an internal, motor overload device.
   f. Compressor shall be factory-mounted on rubber grommets.
   g. Compressor motors shall have internal line break thermal, current overload and high pressure differential protection.
   h. Crankcase heaters shall not be required for normal operating range, unless required by the manufacturer due to refrigerant charge limits.

K. (23 81 19.13.K.) Filter Section:
1. Filters access is specified in the unit cabinet section of this specification.
2. Filters shall be held in place by a pivoting filter tray, facilitating easy removal and installation.
3. Shall consist of factory installed, low velocity, throw-away 2 in. thick fiberglass filters.
4. Filters shall be standard, commercially available sizes.
5. Only one size filter per unit is allowed.

L. (23 81 19.13.L.) Evaporator Fan and Motor with EcoBlue™ Technology:
1. Direct Drive Evaporator Fan Motor:
   a. Shall be an ECM motor design.
   b. Shall be direct drive design for all static options.
   c. Shall have permanently lubricated bearings.
   d. Shall have inherent automatic-reset thermal overload protection.
   e. Shall have slow ramp up to speed capabilities.
   f. Shall require no fan/motor belts for operation, adjustments and or initial fan speed set up.
   g. Fan DC voltage set up on Unit Control Board shall eliminate the need of removal of blower access door, required on conventional belt drive systems.
   h. Shall be internally protected from electrical phase reversal.
2. Evaporator Fan:
   a. Speed shall be easily set with dedicated selection switch and adjustment pot on unit control board or through SystemVu™ controller.
   b. Shall provide 2 stage cooling capacity control, the indoor fan speed is automatically controlled to meet the code-compliant <66% low fan speed and 100% at full fan speed operation.
   c. Blower fan shall be a Vane Axial fan design with fan assembly secured directly to ECM motor. Additional shafts, belts, pulleys/sheaves, and bearing blocks to drive fan shall not be permitted or necessary.
   d. Additional variable frequency drive to control fan motor speed shall not be permitted or necessary. All speed control electronics must be onboard fan motor assembly.
   e. Shall be constructed of a high impact composite material for stator, rotor, and air inlet casing.
   f. Shall be a patented/pending design with a corrosion resistant material.
   g. Fan assembly design shall be integrated to fan deck, dynamically balanced, and require no additional vibration isolation for normal operation.
   h. Shall have slow ramp up to speed capabilities to help reduce sound and comfort issues typically associated with single speed belt drive systems.
   i. Shall be a slide out design with removal of a few support brackets.
3. Shall include an easily accessible Unit Control Board to conveniently and safely provide connection points for vital control functions such as: smoke detectors, phase monitor, gas controller, economizer, thermostat, DDC control options, and low, high and mixed air temperature switches. Controller shall also provide an intuitive means to adjust the indoor fan speed through a simple switch and pot adjustment design.

M. (23 81 19.13.M.) Condenser Fans and Motors:
1. Condenser Fan Motors:
   a. Shall be a totally enclosed motor.
   b. Shall use permanently lubricated bearings.
   c. Shall have inherent thermal overload protection with an automatic reset feature.
   d. Shall use a shaft-down design on all sizes.
2. Condenser Fans:
   a. Shall be a direct-driven propeller type fan.
   b. Shall have galvalum blades riveted to steel spider that have corrosion-resistant properties and shall be dynamically balanced.

N. (23 81 19.13.N.) Special Features Options and Accessories:

1. Integrated EconomizerONE and EconoMi$er® 2 Low Leak Rate Models.
   a. Integrated, gear driven opposing modulating blade design type capable of simultaneous economizer and compressor operation.
   b. Independent modules for vertical or horizontal return configuration shall be available. Vertical return modules shall be available as a factory installed option.
   c. Damper blades shall be galvanized steel with composite gears. Plastic or composite blades on intake or return shall not be acceptable.
   d. Shall include all hardware and controls to provide free cooling with outdoor air when temperature and/or humidity are below set points.
   e. Shall be equipped with gear driven dampers for both the outdoor ventilation air and the return air for positive air stream control.
   f. Low leak rate shall be equipped with dampers not to exceed 2% leakage at 1 in. wg pressure differential.
   g. Economizer controller on EconomizerONE models shall be Siemens POL224 that provides:
      1) Combined minimum and DCV maximum damper position potentiometers with compressor staging relay.
      2) Optional configuration via WLAN stick and Siemens Climatix™[1] smartphone app for easy setup.
      3) Functions with solid-state analog enthalpy or dry bulb changeover control sensing.
      4) LED indicators for free cooling, sensor, and damper operation.
      5) One-line LCD interface screen for setup, configuration, and troubleshooting.
      6) On-board Fault Detection and Diagnostics (FDD) that senses and alerts when the economizer is not operating properly, per California Title 24, ASHRAE 90.1 and IECC.
      7) Sensor failure loss of communication identification.
      8) Capabilities for use with multiple-speed or single speed indoor fan systems.
      9) Digital sensors: dry bulb and enthalpy.
   h. Economizer controller on EconoMi$er 2 models with SystemVu™ controllers shall be a 4 to 20 mA design controlled directly by the controller. SystemVu controllers meet California Title 24, ASHRAE 90.1, and IECC Fault Detection and Diagnostic (FDD) requirements.
   i. Shall be capable of introducing up to 100% outdoor air.
   j. Shall be equipped with a barometric relief damper capable of relieving up to 100% return air and contain seals that meet ASHRAE 90.1 requirements.
   k. Shall be designed to close damper(s) during loss-of-power situations with spring return built into motor.
   l. Dry bulb outdoor air temperature sensor shall be provided as standard. Enthalpy sensor is also available on factory-installed economizers only. Outdoor air sensor setpoint shall be adjustable and shall range from 40°F to 100°F (4°C to 38°C). Additional sensor options shall be available as accessories.
   m. The economizer controller shall also provide control of an accessory power exhaust unit function. Factory set at 100%, with a range of 0% to 100%.
   n. The economizer shall maintain minimum airflow into the building during occupied period and provide design ventilation rate for full occupancy.
   o. Dampers shall be completely closed when the unit is in the unoccupied mode.
   p. Economizer controller shall accept a 0 to 10 vdc CO_2 sensor input for IAQ/DCV control. In this mode, dampers shall modulate the outdoor air damper to provide ventilation based on the sensor input.
   q. Compressor lockout temperature on POL224 control is adjustable from –45°F to 80°F (–43°C to 26°C), set at a factory default of 32°F (0°C).
   r. Actuator shall be direct coupled to economizer gear. No linkage arms or control rods shall be acceptable.
   s. Contains LED indicators for free cooling, sensor, and damper operation.
2. Integrated EconoMi$er 2 and EconomizerONE Ultra Low Leak Rate Models.
   a. Integrated, gear driven opposing modulating blade design type capable of simultaneous economizer and compressor operation.
   b. Independent modules for vertical or horizontal return configuration shall be available. Vertical return modules shall be available as a factory installed option.
   c. Damper blades shall be galvanized steel with composite gears. Plastic or composite blades on intake or return shall not be acceptable.
   d. Shall include all hardware and controls to provide free cooling with outdoor air when temperature and/or humidity are below set points.

1. Third-party trademarks and logos are the property of their respective owners.

e. Shall be equipped with gear driven dampers for both the outdoor ventilation air and the return air for positive air stream control.

f. Ultra Low Leak design meets California Title 24 section 140.4 and ASHRAE 90.1 requirements for 4 cfm per sq ft on the outside air dampers and 10 cfm per sq ft on the return dampers.

g. Economizer controller on EconomizerONE models shall be the Siemens POL224 that provides:

1) One-line LCD interface screen for setup, configuration and troubleshooting.

2) Optional configuration via WLAN stick and Siemens Climatix™ smartphone app for easy setup.

3) On-board Fault Detection and Diagnostics (FDD) that senses and alerts when the economizer is not operating properly, per California Title 24, ASHRAE 90.1 and IECC.

4) Sensor failure loss of communication identification.

5) Capabilities for use with multiple-speed indoor fan systems.

6) Digital sensors: dry bulb and enthalpy.

h. Economizer controller on EconoMi$er® 2 models with SystemVu™ controllers shall be a 4 to 20 mA design controlled directly by the controller. SystemVu controllers meet California Title 24, ASHRAE 90.1, and IECC Fault Detection and Diagnostic (FDD) requirements.

i. Shall be capable of introducing up to 100% outdoor air.

j. Shall be equipped with a barometric relief damper capable of relieving up to 100% return air and contain seals that meet ASHRAE 90.1 requirements.

k. Shall be designed to close damper(s) during loss-of-power situations with spring return built into motor.

l. Dry bulb outdoor air temperature sensor shall be provided as standard. Enthalpy sensor is also available on factory-installed economizers only. Outdoor air sensor setpoint shall be adjustable and shall range from 40°F to 100°F (4°C to 38°C). Additional sensor options shall be available as accessories.

m. The economizer controller shall also provide control of an accessory power exhaust unit function. Factory set at 100%, with a range of 0% to 100%.

n. The economizer shall maintain minimum airflow into the building during occupied period and provide design ventilation rate for full occupancy.

o. Dampers shall be completely closed when the unit is in the unoccupied mode.

p. Economizer controller shall accept a 0 to 10 vdc CO_2 sensor input for IAQ/DCV control. In this mode, dampers shall modulate the outdoor air damper to provide ventilation based on the sensor input.

q. Compressor lockout temperature on POL224 control is adjustable from –45°F to 80°F (–43°C to 26°C), set at a factory default of 32°F (0°C).

r. Actuator shall be direct coupled to economizer gear. No linkage arms or control rods shall be acceptable.

s. Contains LED indicators for free cooling, sensor, and damper operation.

3. Wi-Fi/WLAN stick for EconomizerONE POL224 (field-installed):

This item allows use of the Siemens Climatix™ mobile application.

4. Two-Position Damper (field-installed only):

a. Damper shall be a Two-Position Damper. Damper travel shall be from the full closed position to the field adjustable %-open setpoint.

b. Damper shall include adjustable damper travel from 25% to 100% (full open).

c. Damper shall include single or dual blade, gear driven dampers and actuator motor.

d. Actuator shall be direct coupled to damper gear. No linkage arms or control rods shall be acceptable.

e. Damper will admit up to 100% outdoor air for applicable rooftop units.

f. Damper shall close upon indoor (evaporator) fan shutoff and/or loss of power.

g. The damper actuator shall plug into the rooftop unit's wiring harness plug. No hard wiring shall be required.

h. Outside air hood shall include aluminum water entrainment filter.

5. Manual Damper (field-installed only):

a. Manual damper package shall consist of damper, air inlet screen, and rain hood which can be preset to admit up to 25 or 50% outdoor air for year round ventilation.

6. Humidi-MiZer® Adaptive Dehumidification System:

The Humidi-MiZer Adaptive Dehumidification System shall be factory installed and shall provide greater dehumidification of the occupied space by 2 modes of dehumidification operations in addition to its normal design cooling mode:

a. Subcooling mode further sub cools the hot liquid refrigerant leaving the condenser coil

when both temperature and humidity in the space are not satisfied.

b. Hot gas reheat mode shall mix a portion of the hot gas from the discharge of the compressor with the hot liquid refrigerant leaving the condenser coil to create a 2-phase heat transfer in the system, resulting in a neutral leaving air temperature when only humidity in the space is not satisfied.

c. Includes low ambient controller.

7. Low Ambient Control Package:
   a. Controller shall control coil head pressure by condenser fan speed modulation or condenser fan cycling and wind baffles.
   b. Shall consist of solid-state control and condenser coil temperature sensor to maintain condensing temperature between 90°F (32°C) and 110°F (43°C) at outdoor ambient temperatures down to –20°F (–29°C). For full low ambient control range, winter start kit is required.
8. Propane Gas Conversion Kit:
   a. Package shall contain all the necessary hardware and instructions to convert a standard natural gas unit for use with liquefied propane, up to 2000 ft (610 m) elevation.
   b. Additional accessory kits may be required for applications above 2000 ft (610 m) elevation.
9. Flue Shield (08-14 sizes only):
   a. Flue shield shall provide protection from the hot sides of the gas flue hood.
10. Condenser Coil Hail Guard Assembly (Factory or field-installed):
    a. Shall protect against hail and additional coil damage.
    b. Shall be louvered type.
11. Unit-Mounted, Non-Fused Disconnect Switch
    a. Available on 7.5 to 12.5 ton units with factory equipped FLA of 80 amps or less, or 15 ton units with FLA of 80 amps or less (460/575V) or 100 amps or less (208/230V).
    b. Switch shall be factory installed, internally mounted.
    c. National Electric Code (NEC) and UL approved non-fused switch shall provide unit power shutoff.
    d. Shall be accessible from outside the unit.
    e. Shall provide local shutdown and lockout capability.
    f. Sized only for the unit as ordered from the factory. Does not accommodate field-installed devices.
12. Convenience Outlet:
    a. Factory-Installed Powered Convenience Outlet.
       1) Outlet shall be powered from main line power to the rooftop unit.
       2) Outlet shall be powered from line side or load side of disconnect by installing contractor, as required by code. If outlet is powered from load side of disconnect, unit electrical ratings shall be UL certified and rated for additional outlet amperage.
       3) Outlet shall be factory-installed and internally mounted with easily accessible 115-v female receptacle.
       4) Outlet shall include 15 amp GFI receptacles with independent fuse protection.
       5) Voltage required to operate convenience outlet shall be provided by a factory installed step-down transformer.
       6) Outlet shall be accessible from outside the unit.
       7) Outlet shall include a field installed “Wet in Use” cover.
    b. Factory-Installed Non-Powered Convenience Outlet.
       1) Outlet shall be powered from a separate 115/120-v power source.
       2) A transformer shall not be included.
       3) Outlet shall be factory-installed and internally mounted with easily accessible 115-v female receptacle.
       4) Outlet shall include 15 amp GFI receptacles with independent fuse protection.
       5) Outlet shall be accessible from outside the unit.
       6) Outlet shall include a field installed “Wet in Use” cover.
    c. Field-Installed Non-Powered Convenience Outlet.
       1) Outlet shall be powered from a separate 115/120v power source.
       2) A transformer shall not be included.
       3) Outlet shall be field-installed and internally mounted with easily accessible 115-v female receptacle.
       4) Outlet shall include 20 amp GFI receptacles. This kit provides a flexible installation method which allows code compliance for height requirements of the GFCI outlet from the finished roof surface as well as the capability to relocate the outlet to a more convenient location.
       5) Outlet shall be accessible from outside the unit.

6) Outlet shall include a field installed "Wet in Use" cover.

13. Flue Discharge Deflector:
    a. Flue discharge deflector shall direct unit exhaust vertically instead of horizontally.
    b. Deflector shall be defined as a "natural draft" device by the National Fuel and Gas (NFG) code.
14. Thru-the-Base Connectors:
    a. Kits shall provide connectors to permit gas and electrical connections to be brought to the unit through the unit basepan.
    b. Minimum of 4 connection locations per unit.
15. Supply Duct Cover (size 16 only):
    a. Required when field converting the factory standard vertical duct supply to horizontal duct supply configuration. One required per unit.
16. Propeller Power Exhaust:
    a. Power exhaust shall be used in conjunction with an integrated economizer.
    b. Independent modules for vertical or horizontal return configurations shall be available.
    c. Horizontal power exhaust shall be mounted in return ductwork.
    d. Power exhaust shall be controlled by economizer controller operation. Exhaust fans shall be energized when dampers open past the 0 to 100% adjustable setpoint on the economizer control.
17. Roof Curbs (Vertical):
    a. Full perimeter roof curb with exhaust capability providing separate air streams for energy recovery from the exhaust air without supply air contamination.
    b. Formed galvanized steel with wood nailer strip and shall be capable of supporting entire unit weight.
    c. Permits installation and securing of ductwork to curb prior to mounting unit on the curb.
18. High Altitude Gas Conversion Kit:

    Package shall contain all the necessary hardware and instructions to convert a standard natural gas unit to operate from 2000 to 7000 ft (610 to 2134 m) elevation with natural gas or from 0 to 7000 ft (0 to 2134 m) elevation with liquefied propane.
19. Outdoor Air Enthalpy Sensor:

    The outdoor air enthalpy sensor shall be used to provide single enthalpy control. When used in conjunction with a return air enthalpy sensor, the unit will provide differential enthalpy control. The sensor allows the unit to determine if outside air is suitable for free cooling.
20. Return Air Enthalpy Sensor:

    The return air enthalpy sensor shall be used in conjunction with an outdoor air enthalpy sensor to provide differential enthalpy control.
21. Indoor Air Quality (CO_2) Sensor:
    a. Shall be able to provide demand ventilation indoor air quality (IAQ) control.
    b. The IAQ sensor shall be available in duct mount, wall mount, or wall mount with LED display. The setpoint shall have adjustment capability.
22. Smoke Detectors:
    a. Shall be a 4-Wire controller and detector.
    b. Shall be environmentally compensated with differential sensing for reliable, stable, and drift-free sensitivity.
    c. Shall use magnet-activated test/reset sensor switches.
    d. Shall have tool-less connection terminal access.
    e. Shall have a recessed momentary switch for testing and resetting the detector.
    f. Controller shall include:
        1) One set of normally open alarm initiation contacts for connection to an initiating device circuit on a fire alarm control panel.
        2) Two Form-C auxiliary alarm relays for interface with rooftop unit or other equipment.
        3) One Form-C supervision (trouble) relay to control the operation of the Trouble LED on a remote test/reset station.
        4) Capable of direct connection to 2 individual detector modules.
        5) Can be wired to up to 14 other duct smoke detectors for multiple fan shutdown applications.
23. Winter Start Kit:
    a. Shall contain a bypass device around the low pressure switch.
    b. Shall be required when mechanical cooling is required below 40°F (4°C).
    c. Shall not be required to operate an economizer for cooling when below an outdoor ambient of 40°F (4°C).
    d. Is not compatible with SystemVu controls.
24. Time Guard:
    a. Shall prevent compressor short-cycling by providing a 5-minute delay (±2 minutes) before restarting a compressor after shutdown for any reason.
    b. One device shall be required per compressor.

25. Disconnect Switch Bracket (size 16 only):

    Provides a pre-engineered and sized mounting bracket for applications requiring a unit mounted fused and non-fused disconnect of greater than 100 amps. Bracket assures that no damage will occur to coils when mounting with screws and other fasteners.

26. Hinged Access Panels:
    a. Shall provide easy access through integrated quarter turn latches.
    b. Shall be on major panels of: filter, control box, fan motor, and compressor.

27. Condensate Overflow Switch:

    This sensor and related controller monitors the condensate level in the drain pan and shuts down compression operation when overflow conditions occur. It includes:
    a. Indicator light — solid red (more than 10 seconds on water contact — compressors disabled), blinking red (sensor disconnected).
    b. 10 second delay to break — eliminates nuisance trips from splashing or waves in pan (sensor needs 10 seconds of constant water contact before tripping).
    c. Disables the compressors operation when condensate plug is detected, but still allows fans to run for economizer.

28. 4 in. MERV-13 Return Air Filters (factory-installed only):
    a. Factory option to upgrade standard unit filters to 4 in. MERV-13 filters.
    b. Upgraded option shall include factory-installed 4 in. filter rack
    c. Shall not be compatible with horizontal units with field installed economizers.

29. 4 in. Return Air Rack (field-installed only):
    a. Accessory kit is designed to hold 4 in. MERV-8 or MERV-13 filters. Filters not included in kit.
    b. Shall not be compatible with horizontal units with field installed economizers.

30. 2 in. MERV-13 Return Air Filters:
    a. Accessory kit to field upgrade standard unit filters to 2 in. MERV-13 filters.
    b. Correct size and quantity of filters shall ship in a single box.

31. 2 in. MERV-8 Return Air Filters:
    a. Accessory kit to field upgrade standard unit filters to 2 in. MERV-8 filters.
    b. Correct size and quantity of filters shall ship in a single box.

32. Phase Monitor Control:
    a. Shall monitor the sequence of 3-phase electrical system to provide a phase reversal protection.
    b. Shall monitor the 3-phase voltage inputs to provide a phase loss protection for the 3-phase device.
    c. Will work on either a Delta or Wye power connection.

33. Horn/Strobe Annunciator:
    a. Provides an audible/visual signaling device for use with factory-installed option or field installed accessory smoke detectors.
    b. Requires installation of a field-supplied 24-v transformer suitable for 4.2 VA (AC) or 3.0 VA (DC) per horn/strobe accessory.
    c. Requires field-supplied electrical box, North American 1-gang box, 2 in. x 4 in. (51 mm x 102 mm).
    d. Shall have a clear colored lens.

34. High Short Circuit Current Rating (SCCR) Protection:
    a. Factory-installed option shall provide high short circuit current protection to compressor and all indoor and outdoor fan motors rated at 10 kA against high potential fault current situations. (Standard unit comes with 5 kA rating.)
    b. This option is not available with factory installed Humidi-MiZer system, powered convenience outlet, non-fused disconnect, low ambient controls, phase loss monitor/protection, and 575-v models.

Guide specifications — 50FE

Note about this specification:
This specification is in the "Masterformat" as published by the Construction Specification Institute. Please feel free to copy this specification directly into your building spec.

Cooling Only/Electric Heat Packaged Rooftop

HVAC Guide Specifications

Size Range: **7.5 to 15 Nominal Tons**

Carrier Model Number: **50FE-*08-16**

Part 1 — (23 06 80) Schedules for Decentralized HVAC Equipment

1.01 (23 06 80.13) Decentralized Unitary HVAC Equipment Schedule:

A. (23 06 80.13.A.) Rooftop Unit (RTU) Schedule:

1. Schedule is per the project specification requirements.

Part 2 — (23 07 16) HVAC Equipment Insulation

2.01 (23 07 16.13) Decentralized, Rooftop Units:

A. (23 07 16.13.A.) Evaporator Fan Compartment:

1. Interior cabinet surfaces shall be insulated with a minimum 1/2 in. thick, minimum 1-1/2 lb density, flexible fiberglass insulation bonded with a phenolic binder, neoprene coated on the air side.
2. Insulation and adhesive shall meet NFPA 90A requirements for flame spread and smoke generation.

B. (23 07 16.13.B.) Electric Heat Compartment:

1. Aluminum foil-faced fiberglass insulation shall be used.
2. Insulation and adhesive shall meet NFPA 90A requirements for flame spread and smoke generation.

Part 3 — (23 09 13) Instrumentation and Control Devices for HVAC

3.01 (23 09 13.23) Sensors and Transmitters:

A. (23 09 13.23.A.) Thermostats:

1. Thermostat must:
   a. energize both "W" and "G" when calling for heat.
   b. have capability to energize 1 or 2 stages of cooling, and 2 different stages of heating.
   c. include capability for occupancy scheduling.

Part 4 — (23 09 23) Direct Digital Control System for HVAC

4.01 (23 09 23.13) Decentralized, Rooftop Units:

A. (23 09 23.13.A.) SystemVu™ intelligent integrated Direct Digital Control (DDC) shall provide:

1. Integrated unit operation for comfort cooling, heating ventilation as well as all monitoring, recording and reporting capabilities. Controller shall also provide diagnostics and alarms of abnormal unit operation through the controller. Controller shall have an intuitive user display and be able to be used in a standalone operation or via building automation system (BAS).
2. Quick Unit Status LEDs of: RUN — meaning all systems are go, ALERT — that indicates there is currently a non-critical issue with the unit, like filters need to be replaced and FAULT — that indicates the unit has a critical issue and will possibly shut down.
3. Six large navigation keys for easy access. Navigation keys shall consist of: TEST, BACK, ENTER, and MENU along with UP and DOWN arrows.
4. Full back lit user display with 4 line by 30 character text capabilities. Display menu shall be designed to provide guided major menus and sub menus main menus provided below:
   a. Shutdown Unit
   b. Run Status
   c. Settings
   d. Alerts/Faults
   e. Service
   f. Inputs
   g. Outputs
   h. USB
5. The capability for standalone operation with conventional thermostat/sensor or use with building automation systems (BAS) of Carrier i-Vu®, BACnet®[1] MS/PT and Carrier Comfort Network® (CCN) systems. No special modules or boards are required for these capabilities. Has the capability to work with Equipment Touch™ and System Touch™ devices and ZS Sensors.
6. The ability to read refrigerant pressures at display or via BAS network of; Discharge Pressure and Suction Pressure. The need for traditional refrigerant gauges is not required.
7. USB Data Port for flash drive interaction. This will allow the transfer of data for uploads, downloads, perform software upgrades, back-up and restore data and file transfer data such as component number of starts and run hours.

1. Third-party trademarks and logos are the property of their respective owners.

8. Reverse Rotation Protection of compressors if field 3-phase wiring is misapplied.
9. Provide Service Capabilities of:
   a. Auto run test
   b. Manual run test
   c. Component run hours and starts
   d. Commissioning reports
   e. Data logging
   f. Alarm history
10. Economizer control and diagnostics. Set up economizer operation, receive feedback from actuator. Also meets the most recent California Title 24, ASHRAE®[1] 90.1 and IECC®[1] Fault Detection and Diagnostic (FDD) requirements.
11. Unit cooling operation down to 40°F (4°C).
12. Controller shall have easy access connections around the controller perimeter area and consist of Mate-N-Lok, terminal block and RJ style modular jack connections.
13. 365 day real time clock, 20 holiday schedules along with occupied and unoccupied scheduling.
14. Auto-Recognition for easy installation and commissioning of devices like economizers, space sensors, etc.
15. A 5°F (3°C) temperature difference between cooling and heating setpoints to meet the latest ASHRAE 90.1 Energy Standard.
16. Return air sensor, supply air sensor and outdoor air sensor to help monitor and provide data for the unit comfort operation, diagnostic and alarms.
17. Use of Carrier's field accessory Equipment Touch and System Touch devices.
18. Units with the factory-installed Humidi-MiZer® system option are capable of providing multiple modes of improved dehumidification as a variation of the normal cooling cycle.
19. Supply Air Tempering control operates the gas or electric heat to maintain a minimum supply air temperature during conditions where very cold outdoor air causes the supply air temperature to fall below the configured Supply Air Tempering Setpoint. This occurs during periods where DCV is active and increasing the amount of outdoor air or in cases where the system is operating at very low airflow and the calculated economizer position has increased to maintain a constant ventilation rate.
20. Demand limiting in SystemVu™ is achieved through setpoint expansion. The systems heating and cooling setpoints are expanded in steps or levels. The degree to which the setpoints may be expanded is defined by the 6 demand level offsets and the 2 commanded demand limit levels.
21. 3-year limited part warranty.

Part 5 — (23 09 33) Electric and Electronic Control System for HVAC

5.01 (23 09 33.13) Decentralized, Rooftop Units:

A. (23 09 33.13.A.) General:
   1. Shall be complete with self-contained low-voltage control circuit protected by a resettable circuit breaker on the 24-v transformer side. Transformer shall have 75VA capability.
   2. Shall utilize color-coded wiring.
   3. Shall include a Unit Control Board to conveniently and safely provide connection points for vital control functions such as: smoke detectors, phase monitor, economizer, thermostat, DDC control options, and low and high pressure switches. Controller shall also provide an intuitive means to adjust the indoor fan speed through a simple switch and pot adjustment design.
   4. Unit shall include a minimum of one 8-pin screw terminal connection board for connection of control wiring.

B. (23 09 33.13.B.) Safeties:
   1. Compressor over-temperature, over-current. High internal pressure differential.
   2. Low Pressure Switch

      Low pressure switch shall use different color wire than the high pressure switch. The purpose is to assist the installer and service technician to correctly wire and or troubleshoot the rooftop unit.
   3. High Pressure Switch

      High pressure switch shall use different color wire than the low pressure switch. The purpose is to assist the installer and service technician to correctly wire and or troubleshoot the rooftop unit.
   4. Mixed Air Auto Reset Temperature Switch:

      All cooling units contain a low return air (or mixed air - depending on unit configuration) temperature switch for compressor protection. The switch prevents compressor operation at mixed air temperatures below 60°F (15°C) to ensure long term reliability but allows continued fan and economizer operation (if in-stalled). The switch will automatically reset when the return/mixed air temperature warms above 65°F (18°C) and will allow compressor operation to continue.
   5. Heating section shall be provided with the following minimum protections:
      a. High temperature limit switches.

1. Third-party trademarks and logos are the property of their respective owners.

6. A2L Refrigerant Leak Dissipation System (Electromechanical):
   a. Leak dissipation system shall consist of control board and A2L sensor certified to UL 60335-2-40.
   b. System shall be designed for the life of the unit.
   c. Dissipation system shall be automatic, ship pre-wired, and require no additional field connections to thermostat to function.
   d. Refrigerant leak sensor shall be installed in UL-certified location and orientation. Sensor shall be self-correcting and resettable. Single use refrigerant leak sensor shall not be permitted.
   e. Factory-installed dissipation controller shall use onboard microprocessor and include:
      1) Automatic reset after a dissipation event has occurred.
      2) Onboard LED with flash code to indicate current unit status and hardware failures.
      3) Depressible "Test" button to allow for a system test and recall/reset of leak detection history.
      4) 24-v dry contact alarm terminal to allow for external notification of leak detection.
   f. Dissipation control board shall be accessible via normal maintenance locations and LED shall be visible.
   g. Dissipation system shall "Fail Safe" per UL requirements.
   h. Dissipation shall allow smoke and building fire systems to override in case of event.
7. A2L Refrigerant Leak Dissipation System (SystemVu):
   a. Leak dissipation system shall consist of control board and A2L sensor certified to UL 60335-2-40, integrated with SystemVu controller.
   b. System shall be designed for the life of the unit.
   c. Dissipation system shall be automatic, ship pre-wired, and require no additional field connections to function.
   d. Refrigerant leak sensor shall be installed in UL-certified location and orientation. Sensor shall be self-correcting and resettable. Single use refrigerant leak sensor shall not be permitted.
   e. Factory-installed dissipation system shall use onboard microprocessor and include:
      1) Automatic leak detection and dissipation algorithm.
      2) Automatic reset after a dissipation event has occurred.
      3) Onboard LED with flash code to indicate current unit status and hardware failures.
      4) Depressible "Test" button to allow for a system test and recall/reset of leak detection history.
      5) 24-v dry contact alarm terminal on dissipation control board to allow for external notification of leak detection.
      6) Ability to notify BAS system of dissipation event via readable alarm point through SystemVu.
      7) Recallable dissipation alarm history on SystemVu controller.
   f. Dissipation control board shall be accessible via normal maintenance locations and LED shall be visible.
   g. Dissipation system shall "Fail Safe" per UL requirements.
8. Dissipation shall allow smoke and building fire systems to override in case of event.

Part 6 — (23 09 93) Sequence of Operations for HVAC Controls

6.01 (23 09 93.13) Decentralized, Rooftop Units:

A. (23 09 93.13.A.) INSERT SEQUENCE OF OPERATION

Part 7 — (23 40 13) Panel Air Filters

7.01 (23 40 13.13) Decentralized, Rooftop Units:

A. (23 40 13.13.A.) Standard Filter Section:
   1. Shall consist of factory installed, low velocity, disposable 2 in. thick fiberglass filters of commercially available sizes.
   2. Unit shall use only one filter size. Multiple sizes are not acceptable.
   3. Filters shall be accessible through an access panel with "no-tool" removal as described in the unit cabinet section of this specification (23 81 19.13.G).

Part 8 — (23 81 19) Self-Contained Air Conditioners

8.01 (23 81 19.13) Small-Capacity Self-Contained Air Conditioners:

A. (23 81 19.13.A.) General:
   1. Outdoor, rooftop mounted, electrically controlled, heating and cooling unit utilizing fully hermetic scroll compressors for cooling duty.
   2. Factory assembled, single-piece heating and cooling rooftop unit. Contained within the unit enclosure shall be all factory wiring, piping, controls, and special features required prior to field start-up.
   3. Unit shall use Puron Advance™ (R-454B) refrigerant.
   4. Unit shall be installed in accordance with the manufacturer's instructions.
   5. Unit must be selected and installed in compliance with local, state, and federal codes.

B. (23 81 19.13.B.) Quality Assurance:
   1. Unit meets DOE and ASHRAE 90.1 minimum efficiency requirements.
   2. Unit shall be rated in accordance with AHRI Standards 340/360.
   3. Unit shall be designed to conform to ASHRAE 15.
   4. Unit shall be UL-tested and certified in accordance with ANSI Z21.47 Standards and UL-listed and certified under Canadian standards as a total package for safety requirements.
   5. Insulation and adhesive shall meet NFPA 90A requirements for flame spread and smoke generation.
   6. Unit casing shall be capable of withstanding 500 hour salt spray exposure per ASTM B117 (scribed specimen).
   7. Unit shall be designed in accordance with ISO 9001, and shall be manufactured in a facility registered by ISO 9001:2015.
   8. Roof curb shall be designed to conform to NRCA Standards.
   9. Unit shall be subjected to a completely automated run test on the assembly line. The data for each unit will be stored at the factory, and must be available upon request.
   10. Unit shall be designed in accordance with UL Standard 60335-1 and 60335-2-40, including tested to withstand rain. Unit shall be IPX4 rated.
   11. Unit shall be constructed to prevent intrusion of snow and tested to prevent snow intrusion into the control box up to 40 mph.
   12. Unit shake tested to assurance level 1, ASTM D4169 to ensure shipping reliability.

C. (23 81 19.13.C.) Delivery, Storage, and Handling:
   1. Unit shall be stored and handled per manufacturer's recommendations.
   2. Lifted by crane requires either shipping top panel or spreader bars.
   3. Unit shall only be stored or positioned in the upright position.

D. (23 81 19.13.D.) Project Conditions:
   1. As specified in the contract.

E. (23 81 19.13.E.) Operating Characteristics:
   1. Unit shall be capable of starting and running at 115°F (46°C) ambient outdoor temperature, meeting maximum load criteria of AHRI Standard 340/360 at ±10% voltage.
   2. Compressor with standard controls shall be capable of operation down to 40°F (4°C) ambient outdoor temperatures.
   3. Unit shall discharge supply air vertically or horizontally as shown on contract drawings.
   4. Unit shall be factory configured for vertical supply and return configurations.
   5. Unit shall be field convertible from vertical to horizontal airflow on all models. No special kit required except on 16 size models that requires a Supply Duct Kit field installation for horizontal air flow.
   6. Unit shall be capable of mixed operation: vertical supply with horizontal return or horizontal supply with vertical return.

F. (23 81 19.13.F.) Electrical Requirements:
   1. Main power supply voltage, phase, and frequency must match those required by the manufacturer.

G. (23 81 19.13.G.) Unit Cabinet:
   1. Unit cabinet shall be constructed of galvanized steel, and shall be bonderized and coated with a prepainted baked enamel finish on all externally exposed surfaces.
   2. Unit cabinet exterior paint shall be: film thickness, (dry) 0.003 in. minimum, gloss (per ASTM D523, 60°F/16°C): 60, Hardness: H-2H Pencil hardness.
   3. Evaporator fan compartment interior cabinet insulation shall conform to AHRI Standards 340/360 minimum exterior sweat criteria. Interior surfaces shall be insulated with a minimum 1/2 in. thick, 1 lb density, flexible fiberglass insulation, neoprene coated on the air side. Aluminum foil-faced fiberglass insulation shall be used in the heat compartment.
   4. Base of unit shall have a minimum of 4 locations for thru-the-base gas and electrical connections (factory-installed or field-installed), standard.
   5. Base Rail:
      a. Unit shall have base rails on a minimum of 2 sides.
      b. Holes shall be provided in the base rails for rigging shackles to facilitate maneuvering and overhead rigging.
      c. Holes shall be provided in the base rail for moving the rooftop by fork truck.
      d. Base rail shall be a minimum of 16 gauge thickness.
   6. Condensate Pan and Connections:
      a. Shall be a sloped condensate drain pan made of a corrosion resistant material.
      b. Shall comply with ASHRAE Standard 62.
      c. Shall use a 3/4 in. 14 NPT drain connection, possible either through the bottom or side of the drain pan. Connection shall be made per manufacturer's recommendations.
   7. Top Panel:
      a. Shall be a single piece top panel on 08-14 models and 2 piece on 16 size models.

8. Electrical Connections:
   a. All unit power wiring shall enter unit cabinet at a single, factory prepared, knockout location.
   b. Thru-the-Base Capability:
      1) Standard unit shall have a thru-the-base electrical location(s) using a raised, embossed portion of the unit basepan.
      2) Optional, factory approved, water-tight connection method must be used for thru-the-base electrical connections.
      3) No basepan penetration, other than those authorized by the manufacturer, is permitted.
9. Component Access Panels (standard):
   a. Cabinet panels shall be easily removable for servicing.
   b. Unit shall have one factory installed, tool-less, removable, filter access panel.
   c. Panels covering control box, indoor fan, indoor fan motor, gas components (where applicable), and compressors shall have molded composite handles.
   d. Handles shall be UV modified, composite. They shall be permanently attached, and recessed into the panel.
   e. Screws on the vertical portion of all removable access panel shall engage into heat resistant, molded composite collars.
   f. Collars shall be removable and easily replaceable using manufacturer recommended parts.

H. (23 81 19.13.H.) Coils:
1. Standard Aluminum Fin-Copper Tube Coils:
   a. Standard evaporator and condenser coils shall have aluminum lanced plate fins mechanically bonded to seamless internal helical grooved copper tubes with all joints brazed.
   b. Evaporator coils shall be leak tested to 150 psig, pressure tested to 450 psig, and qualified to UL 60335-2-40 burst test at 1775 psig.
   c. Condenser coils shall be leak tested to 150 psig, pressure tested to 650 psig, and qualified to UL 60335-2-40 burst test at 1980 psig.
2. Optional Pre-coated Aluminum-Fin Condenser Coils:
   a. Shall have a durable epoxy-phenolic coating to provide protection in mildly corrosive coastal environments.
   b. Coating shall be applied to the aluminum fin stock prior to the fin stamping process to create an inert barrier between the aluminum fin and copper tube.
   c. Epoxy-phenolic barrier shall minimize galvanic action between dissimilar metals.
   d. Corrosion durability of fin stock shall be confirmed through testing to be no less than 1000 hours salt spray per ASTM B117.
   e. Corrosion durability of fin stock shall be confirmed through testing to have no visible corrosion after 48 hour immersion in a room temperature solution of 5% salt, 1% acetic acid.
   f. Fin stock coating shall pass 2000 hours of the following: one week exposure in the prohesion chamber followed by one week of accelerated ultraviolet light testing. Prohesion chamber: the solution shall contain 3.5% sodium chloride and 0.35% ammonium sulfate. The exposure cycle is one hour of salt fog application at ambient followed by one hour drying at 95°F (35°C).
3. Optional Copper-Fin Evaporator and Condenser Coils:
   a. Shall be constructed of copper fins mechanically bonded to copper tubes and copper tube sheets.
   b. Galvanized steel tube sheets shall not be acceptable.
   c. A polymer strip shall prevent coil assembly from contacting the sheet metal coil pan to minimize potential for galvanic corrosion between coil and pan.
4. Optional E-coated Aluminum-Fin Evaporator and Condenser Coils:
   a. Shall have a flexible epoxy polymer coating uniformly applied to all coil surface areas without material bridging between fins.
   b. Coating process shall ensure complete coil encapsulation of tubes, fins and headers.
   c. Color shall be high gloss black with gloss per ASTM D523.
   d. Uniform dry film thickness from 0.8 to 1.2 mil on all surface areas including fin edges.
   e. Superior hardness characteristics of 2H per ASTM D3363 and cross-hatch adhesion of 4B-5B per ASTM D3359.
   f. Impact resistance shall be up to 160 in.-lb (ASTM D2794).
   g. Humidity and water immersion resistance shall be up to minimum 1000 and 250 hours respectively (ASTM D2247 and ASTM D870).
   h. Corrosion durability shall be confirmed through testing to be no less than 1000 hours salt spray per ASTM B117.

I. (23 81 19.13.I.) Refrigerant Components:
   1. Refrigerant circuit shall include the following control, safety, and maintenance features:
      a. Thermostatic Expansion Valve (TXV) shall help provide optimum performance across the entire operating range. Shall contain removable power element to allow change out of power element and bulb without removing the valve body.
      b. Refrigerant filter drier, solid core design with pre and post-filter service gauge connections for filter diagnostics and maintenance.
      c. Service gauge connections on suction and discharge lines.
      d. Pressure gauge access through a specially designed access port in the top panel of the unit.
   2. There shall be gauge line access port in the skin of the rooftop:
      a. The gauge access port shall enable maintenance personnel to route their pressure gauge lines.
      b. This gauge access port shall facilitate correct and accurate condenser pressure readings by enabling the reading with the compressor access panel on.
   3. Compressors:
      a. Unit shall use tandem scroll compressor assembly on a single refrigeration circuit with two stages of cooling for efficient comfort cooling operation.
      b. Evaporator coils shall be a full active design to help better control latent removal and minimize unconditioned bypass air.
      c. Compressor motors shall be cooled by refrigerant gas passing through motor windings.
      d. Compressors shall be internally protected from high discharge temperature conditions.
      e. Compressors shall be protected from an over-temperature and over-amperage conditions by an internal, motor overload device.
      f. Compressor shall be factory-mounted on rubber grommets.
      g. Compressor motors shall have internal line break thermal, current overload and high pressure differential protection.
      h. Crankcase heaters shall not be required for normal operating range, unless required by the manufacturer due to refrigerant charge limits.

J. (23 81 19.13.J.) Filter Section:
   1. Filters access is specified in the unit cabinet section of this specification.
   2. Filters shall be held in place by a pivoting filter tray, facilitating easy removal and installation.
   3. Shall consist of factory installed, low velocity, throw-away 2 in. thick fiberglass filters.
   4. Filters shall be standard, commercially available sizes.
   5. Only one size filter per unit is allowed.

K. (23 81 19.13.K.) Evaporator Fan and Motor with EcoBlue™ Technology:
   1. Direct Drive Evaporator Fan Motor:
      a. Shall be an ECM motor design.
      b. Shall be direct drive design for all static options.
      c. Shall have permanently lubricated bearings.
      d. Shall have inherent automatic-reset thermal overload protection.
      e. Shall have slow ramp up to speed capabilities.
      f. Shall require no fan/motor belts for operation, adjustments and or initial fan speed set up.
      g. Fan DC voltage set up on unit control board shall eliminate the need of removal of blower access door, required on conventional belt drive systems.
      h. Shall be internally protected from electrical phase reversal.
   2. Evaporator Fan:
      a. Speed shall be easily set with dedicated selection switch and adjustment pot on unit control board or through SystemVu™ controller.
      b. Shall provide 2 stage cooling capacity control, the indoor fan speed is automatically controlled to meet the code-compliant <66% low fan speed and 100% at full fan speed operation.
      c. Blower fan shall be a vane axial fan design with fan assembly secured directly to ECM motor. Additional shafts, belts, pulleys/sheaves, and bearing blocks to drive fan shall not be permitted or necessary.
      d. Additional variable frequency drive to control fan motor speed shall not be permitted or necessary. All speed control electronics must be on board fan motor assembly.
      e. Shall be constructed of a cast aluminum stator and high impact composite material on stator, rotor and air inlet casing.
      f. Shall be a patented / pending design with a corrosion resistant material.
      g. Fan assembly design shall be integrated into fan deck, dynamically balanced, and require no additional vibration isolation for normal operation.
      h. Shall have slow ramp up to speed capabilities to help reduce sound and comfort issues typically associated with single speed belt drive systems.

i. Shall be a slide out design with removal of a few support brackets.

3. Shall include an easily accessible Unit Control Board to conveniently and safely provide connection points for vital control functions such as: smoke detectors, phase monitor, economizer, thermostat, DDC control options, and low, high and mixed air temperature switches. Controller shall also provide an intuitive means to adjust the indoor fan speed through a simple switch and pot adjustment design.

L. (23 81 19.13.L.) Condenser Fans and Motors:

1. Condenser Fan Motors:
   a. Shall be a totally enclosed motor.
   b. Shall use permanently lubricated bearings.
   c. Shall have inherent thermal overload protection with an automatic reset feature.
   d. Shall use a shaft-down design on all sizes.
2. Condenser Fans:
   a. Shall be a direct-driven propeller type fan.
   b. Shall have galvalum blades riveted to steel spider that have corrosion-resistant properties and shall be dynamically balanced.

M. (23 81 19.13.M.) Special Features Options and Accessories:

1. Integrated EconomizerONE and EconoMi$er® 2 Low Leak Rate Models.
   a. Integrated, gear driven opposing modulating blade design type capable of simultaneous economizer and compressor operation.
   b. Independent modules for vertical or horizontal return configuration shall be available. Vertical return modules shall be available as a factory installed option.
   c. Damper blades shall be galvanized steel with composite gears. Plastic or composite blades on intake or return shall not be acceptable.
   d. Shall include all hardware and controls to provide free cooling with outdoor air when temperature and/or humidity are below setpoints.
   e. Shall be equipped with gear driven dampers for both the outdoor ventilation air and the return air for positive air stream control.
   f. Low leak rate shall be equipped with dampers not to exceed 2% leakage at 1 in. wg pressure differential.
   g. Economizer controller on EconomizerONE models shall be Siemens POL224 that provides:
      1) Combined minimum and DCV maximum damper position potentiometers with compressor staging relay.
      2) Optional configuration via WLAN stick and Siemens Climatix™[1] smartphone app for easy setup.
      3) Functions with solid-state analog enthalpy or dry bulb changeover control sensing.
      4) LED indicators for free cooling, sensor, and damper operation.
      5) One-line LCD interface screen for setup, configuration, and troubleshooting.
      6) On-board Fault Detection and Diagnostics (FDD) that senses and alerts when the economizer is not operating properly, per California Title 24, ASHRAE 90.1, and IECC®[1].
      7) Sensor failure loss of communication identification.
      8) Capabilities for use with multiple-speed or single speed indoor fan systems.
      9) Digital sensors: dry bulb and enthalpy.
   h. Economizer controller on EconoMi$er 2 models with SystemVu™ controllers shall be a 4 to 20mA design controlled directly by the controller. SystemVu controllers meet California Title 24, ASHRAE 90.1, and IECC Fault Detection and Diagnostic (FDD) requirements.
   i. Shall be capable of introducing up to 100% outdoor air.
   j. Shall be equipped with a barometric relief damper capable of relieving up to 100% return air and contain seals that meet ASHRAE 90.1 requirements.
   k. Shall be designed to close damper(s) during loss-of-power situations with spring return built into motor.
   l. Dry bulb outdoor air temperature sensor shall be provided as standard. Enthalpy sensor is also available on factory installed only. Outdoor air sensor setpoint shall be adjustable and shall range from 40°F to 100°F (4°C to 38°C). Additional sensor options shall be available as accessories.
   m. The economizer controller shall also provide control of an accessory power exhaust unit function. Factory set at 100%, with a range of 0% to 100%.
   n. The economizer shall maintain minimum airflow into the building during occupied period and provide design ventilation rate for full occupancy.
   o. Dampers shall be completely closed when the unit is in the unoccupied mode.
   p. Economizer controller shall accept a 0 to 10 vdc CO_2 sensor input for IAQ/DCV control. In this mode, dampers shall modulate the outdoor air damper to provide ventilation based on the sensor input.

1. Third-party trademarks and logos are the property of their respective owners.

q. Compressor lockout temperature on POL224 control is adjustable from –45°F to 80°F (–43°C to 26°C), set at a factory default of 32°F (0°C).

r. Actuator shall be direct coupled to economizer gear. No linkage arms or control rods shall be acceptable.

s. Contains LED indication for free cooling, sensor, and damper operation.

2. Integrated EconoMi$er® 2 and EconomizerONE Ultra Low Leak Rate Models.

a. Integrated, gear driven opposing modulating blade design type capable of simultaneous economizer and compressor operation.

b. Independent modules for vertical or horizontal return configuration shall be available. Vertical return modules shall be available as a factory-installed option.

c. Damper blades shall be galvanized steel with composite gears. Plastic or composite blades on intake or return shall not be acceptable.

d. Shall include all hardware and controls to provide free cooling with outdoor air when temperature and/or humidity are below set points.

e. Shall be equipped with gear driven dampers for both the outdoor ventilation air and the return air for positive air stream control.

f. Ultra Low Leak design meets California Title 24 section 140.4 and ASHRAE 90.1 requirements for 4 cfm per sq ft on the outside air dampers and 10 cfm per sq ft on the return dampers.

g. Economizer controller on EconomizerONE models shall be the Siemens POL224 that provides:

1) One-line LCD interface screen for setup, configuration and troubleshooting.

2) Optional configuration via WLAN stick and Siemens Climatix™ smartphone app for easy setup.

3) On-board Fault Detection and Diagnostics (FDD) that senses and alerts when the economizer is not operating properly, per California Title 24, ASHRAE 90.1 and IECC.

4) Sensor failure loss of communication identification.

5) Capabilities for use with multiple-speed indoor fan systems.

6) Digital sensors: dry bulb and enthalpy.

h. Economizer controller on EconoMi$er 2 models with SystemVu™ controller shall be a 4 to 20 mA design controlled directly by the controller. SystemVu controllers meet California Title 24, ASHRAE 90.1, and IECC Fault Detection and Diagnostic (FDD) requirements.

i. Shall be capable of introducing up to 100% outdoor air.

j. Shall be equipped with a barometric relief damper capable of relieving up to 100% return air and contain seals that meet ASHRAE 90.1 requirements.

k. Shall be designed to close damper(s) during loss-of-power situations with spring return built into motor.

l. Dry bulb outdoor air temperature sensor shall be provided as standard. Enthalpy sensor is also available on factory installed only. Outdoor air sensor setpoint shall be adjustable and shall range from 40°F to 100°F (4°C to 38°C). Additional sensor options shall be available as accessories.

m. The economizer controller shall also provide control of an accessory power exhaust unit function. Factory set at 100%, with a range of 0% to 100%.

n. The economizer shall maintain minimum airflow into the building during occupied period and provide design ventilation rate for full occupancy.

o. Dampers shall be completely closed when the unit is in the unoccupied mode.

p. Economizer controller shall accept a 0 to 10 vdc CO_2 sensor input for IAQ/DCV control. In this mode, dampers shall modulate the outdoor air damper to provide ventilation based on the sensor input.

q. Compressor lockout temperature on POL224 control is adjustable from –45°F to 80°F (–43°C to 26°C), set at a factory default of 32°F (0°C).

r. Actuator shall be direct coupled to economizer gear. No linkage arms or control rods shall be acceptable.

s. Contains LED indicators for free cooling, sensor, and damper operation.

3. Wi-Fi/WLAN stick for EconomizerONE POL224 (field-installed):

This item allows use of the Siemens Climatix™ mobile application.

4. Two-Position Damper (field-installed only):

a. Damper shall be a Two-Position Damper. Damper travel shall be from the full closed position to the field adjustable %-open setpoint.

b. Damper shall include adjustable damper travel from 25% to 100% (full open).

c. Damper shall include single or dual blade, gear driven dampers and actuator motor.

d. Actuator shall be direct coupled to damper gear. No linkage arms or control rods shall be acceptable.
e. Damper will admit up to 100% outdoor air for applicable rooftop units.
f. Damper shall close upon indoor (evaporator) fan shutoff and/or loss of power.
g. The damper actuator shall plug into the rooftop unit's wiring harness plug. No hard wiring shall be required.
h. Outside air hood shall include aluminum water entrainment filter.

5. Manual Damper (field-installed only):
   a. Manual damper package shall consist of damper, air inlet screen, and rain hood which can be preset to admit up to 25% or 50% outdoor air for year round ventilation.
6. Humidi-MiZer Adaptive Dehumidification System:
   The Humidi-MiZer® Adaptive Dehumidification System shall be factory installed and shall provide greater dehumidification of the occupied space by 2 modes of dehumidification operations in addition to its normal design cooling mode:
   a. Subcooling mode further sub cools the hot liquid refrigerant leaving the condenser coil when both temperature and humidity in the space are not satisfied.
   b. Hot gas reheat mode shall mix a portion of the hot gas from the discharge of the compressor with the hot liquid refrigerant leaving the condenser coil to create a 2-phase heat transfer in the system, resulting in a neutral leaving air temperature when only humidity in the space is not satisfied.
   c. Includes low ambient controller.
7. Low Ambient Control Package:
   a. Controller shall control coil head pressure by condenser fan speed modulation or condenser fan cycling and wind baffles.
   b. Shall consist of solid-state control and condenser coil temperature sensor to maintain condensing temperature between 90°F (32°C) and 110°F (43°C) at outdoor ambient temperatures down to –20°F (–29°C). For full low ambient control range, winter start kit is required.
8. Condenser Coil Hail Guard Assembly:
   a. Shall protect against hail and additional coil damage.
   b. Shall be louvered type.
9. Unit-Mounted, Non-Fused Disconnect Switch
   a. Available on 7.5 to 12.5 ton units with factory equipped FLA of 80 amps or less, or 15 ton units with FLA of 100 amps or less (460/575V) or 200 amps or less (208/230V).
   b. Switch shall be factory installed, internally mounted.
   c. National Electric Code (NEC) and UL approved non-fused switch shall provide unit power shutoff.
   d. Shall be accessible from outside the unit.
   e. Shall provide local shutdown and lockout capability.
   f. Sized only for the unit as ordered from the factory. Does not accommodate field-installed devices.
10. Convenience Outlet:
   a. Factory-Installed Powered Convenience Outlet.
      1) Outlet shall be powered from main line power to the rooftop unit.
      2) Outlet shall be powered from line side or load side of disconnect by installing contractor, as required by code. If outlet is powered from load side of disconnect, unit electrical ratings shall be UL certified and rated for additional outlet amperage.
      3) Outlet shall be factory-installed and internally mounted with easily accessible 115-v female receptacle.
      4) Outlet shall include 15 amp GFI receptacles with independent fuse protection.
      5) Voltage required to operate convenience outlet shall be provided by a factory installed step-down transformer.
      6) Outlet shall be accessible from outside the unit.
      7) Outlet shall include a field installed "Wet in Use" cover.
   b. Factory-Installed Non-Powered Convenience Outlet.
      1) Outlet shall be powered from a separate 115/120-v power source.
      2) A transformer shall not be included.
      3) Outlet shall be factory-installed and internally mounted with easily accessible 115-v female receptacle.
      4) Outlet shall include 15 amp GFI receptacles with independent fuse protection.
      5) Outlet shall be accessible from outside the unit.
      6) Outlet shall include a field installed "Wet in Use" cover.
   c. Field-Installed Non-Powered Convenience Outlet.
      1) Outlet shall be powered from a separate 115/120v power source.
      2) A transformer shall not be included.

3) Outlet shall be field-installed and internally mounted with easily accessible 115-v female receptacle.
4) Outlet shall include 20 amp GFI receptacles. This kit provides a flexible installation method which allows code compliance for height requirements of the GFCI outlet from the finished roof surface as well as the capability to relocate the outlet to a more convenient location.
5) Outlet shall be accessible from outside the unit.
6) Outlet shall include a field installed "Wet in Use" cover.

11. Thru-the-Base Connectors:
    a. Kits shall provide connectors to permit gas and electrical connections to be brought to the unit through the unit basepan.
    b. Minimum of 4 connection locations per unit.
12. Supply Duct Cover (size 16 only):
    a. Required when field converting the factory standard vertical duct supply to horizontal duct supply configuration. One required per unit.
13. Propeller Power Exhaust:
    a. Power exhaust shall be used in conjunction with an integrated economizer.
    b. Independent modules for vertical or horizontal return configurations shall be available.
    c. Horizontal power exhaust shall be mounted in return ductwork.
    d. Power exhaust shall be controlled by economizer controller operation. Exhaust fans shall be energized when dampers open past the 0 to 100% adjustable setpoint on the economizer control.
14. Roof Curbs (Vertical):
    a. Full perimeter roof curb with exhaust capability providing separate air streams for energy recovery from the exhaust air without supply air contamination.
    b. Formed galvanized steel with wood nailer strip and shall be capable of supporting entire unit weight.
    c. Permits installation and securing of ductwork to curb prior to mounting unit on the curb.
15. Outdoor Air Enthalpy Sensor:

    The outdoor air enthalpy sensor shall be used to provide single enthalpy control. When used in conjunction with a return air enthalpy sensor, the unit will provide differential enthalpy control. The sensor allows the unit to determine if outside air is suitable for free cooling.
16. Return Air Enthalpy Sensor:

    The return air enthalpy sensor shall be used in conjunction with an outdoor air enthalpy sensor to provide differential enthalpy control.
17. Indoor Air Quality (CO_2) Sensor:
    a. Shall be able to provide demand ventilation indoor air quality (IAQ) control.
    b. The IAQ sensor shall be available in duct mount, wall mount, or wall mount with LED display. The setpoint shall have adjustment capability.
18. Smoke Detectors:
    a. Shall be a 4-wire controller and detector.
    b. Shall be environmentally compensated with differential sensing for reliable, stable, and drift-free sensitivity.
    c. Shall use magnet-activated test/reset sensor switches.
    d. Shall have tool-less connection terminal access.
    e. Shall have a recessed momentary switch for testing and resetting the detector.
    f. Controller shall include:
        1) One set of normally open alarm initiation contacts for connection to an initiating device circuit on a fire alarm control panel.
        2) Two Form-C auxiliary alarm relays for interface with rooftop unit or other equipment.
        3) One Form-C supervision (trouble) relay to control the operation of the Trouble LED on a remote test/reset station.
        4) Capable of direct connection to 2 individual detector modules.
        5) Can be wired to up to 14 other duct smoke detectors for multiple fan shutdown applications.
19. Winter Start Kit:
    a. Shall contain a bypass device around the low pressure switch.
    b. Shall be required when mechanical cooling is required below 40°F (4°C).
    c. Shall not be required to operate an economizer for cooling when below an outdoor ambient of 40°F (4°C).
    d. Is not compatible with SystemVu controls.
20. Time Guard:
    a. Shall prevent compressor short-cycling by providing a 5-minute delay (±2 minutes) before restarting a compressor after shutdown for any reason.
    b. One device shall be required per compressor.
21. Disconnect Switch Bracket (size 16 only):

    Provides a pre-engineered and sized mounting bracket for applications requiring a unit mounted fused and non-fused disconnect of greater than 100 amps. Bracket assures that no

damage will occur to coils when mounting with screws and other fasteners.

22. Hinged Access Panels:
    a. Shall provide easy access through integrated quarter turn latches.
    b. Shall be on major panels of: filter, control box, fan motor, and compressor.
23. Condensate Overflow Switch:

    This sensor and related controller monitors the condensate level in the drain pan and shuts down compression operation when overflow conditions occur. It includes:
    a. Indicator light — solid red (more than 10 seconds on water contact — compressors disabled), blinking red (sensor disconnected).
    b. 10 second delay to break — eliminates nuisance trips from splashing or waves in pan (sensor needs 10 seconds of constant water contact before tripping).
    c. Disables the compressors operation when condensate plug is detected, but still allows fans to run for Economizer.
24. 4 in. MERV-13 Return Air Filters (factory-installed only):
    a. Factory option to upgrade standard unit filters to 4 in. MERV-13 filters.
    b. Upgraded option shall include factory-installed 4 in. filter rack.
    c. Shall not be compatible with horizontal units with field-installed economizers.
25. 4 in. Return Air Rack (field-installed only):
    a. Accessory kit is designed to hold 4 in. MERV-8 or MERV-13 filters. Filters not included in kit.
    b. Shall not be compatible with horizontal units with field installed economizers.
26. 2 in. MERV-13 Return Air Filters:
    a. Accessory kit to field upgrade standard unit filters to 2 in. MERV-13 filters.
    b. Correct size and quantity of filters shall ship in a single box
27. 2 in. MERV-8 Return Air Filters:
    a. Accessory kit to field upgrade standard unit filters to 2 in. MERV-8 filters.
    b. Correct size and quantity of filters shall ship in a single box.
28. Phase Monitor Control:
    a. Shall monitor the sequence of 3-phase electrical system to provide a phase reversal protection.
    b. Shall monitor the 3-phase voltage inputs to provide a phase loss protection for the 3-phase device.
    c. Will work on either a Delta or Wye power connection.
29. Horn/Strobe Annunciator:
    a. Provides an audible/visual signaling device for use with factory-installed option or field installed accessory smoke detectors.
    b. Requires installation of a field-supplied 24-v transformer suitable for 4.2 VA (AC) or 3.0 VA (DC) per horn/strobe accessory.
    c. Requires field-supplied electrical box, North American 1-gang box, 2 in. x 4 in. (51 mm x 102 mm).
    d. Shall have a clear colored lens.
30. Electric Heat:
    a. Heating Section:
        1) Heater element open coil resistance wire, nickel-chrome alloy, 0.29 in. inside diameter, strung through ceramic insulators mounted on metal frame. Coil ends are staked and welded to terminal screw slots.
        2) Heater assemblies are provided with integral fusing for protection of internal heater circuits. Auto reset thermo limit controls, magnetic heater contactors (24-v coil), and terminal block all mounted in electric heater control box (minimum 18 ga galvanized steel) attached to end of heater assembly.
31. High Short Circuit Current Rating (SCCR) Protection:
    a. Factory-installed option shall provide high short circuit current protection to compressor and all indoor and outdoor fan motors rated at 10 kA against high potential fault current situations. (Standard unit comes with 5 kA rating.)
    b. This option is not available with factory installed HumidiMiZer system, powered convenience outlet, non-fused disconnect, low ambient controls, phase loss monitor/protection, and 575-v models.

FJ5
Comfort™ Series Fan Coil, Multipoise, ECM Motor for Puron Advance™ (R-454B) Refrigerant Sizes 18 - 60

Turn to the experts

Product Data

A10082

AIR HANDLER TECHNOLOGY AT ITS FINEST

The FJ5 fan coil has the proven technology of Carrier fan coil units with Puron Advance refrigerant as well as vertical and horizontal applications. The design features contoured condensate pans with rugged drain connections, ensuring that little water is left in the unit at the end of the cooling duty cycle. The lack of standing condensate and corrosion free pans improves IAQ and product life, features homeowners appreciate.

Standard features include grooved tubing and louvered fins. Coil circuiting has also been updated to make the most of all Carrier heat pumps and air conditioners. Units come with solid state fan controls, 1-inch (25mm) thick insulation with R-value of 4.2, multi-speed motors, and fully-wettable coils. Units can accommodate factory- and/or field-installed heaters from 3 to 30 kW.

Assembled at the factory compliant with low leak requirements of less than 2% cabinet leakage rate at 0.5 inches W.C. and 1.4% cabinet leakage rate at 0.5 inches W.C. when tested in accordance with ASHRAE 193 standard.

The FJ5 fan coil design is loaded with popular features. These fan coils utilize the latest in electronic commutation motor (ECM) technology through the use of high efficiency, multi-tap ECM motors allowing reliable air delivery with increased static pressure. It comes in a pre-painted (taupe metallic) galvanized steel casing. The unit is shipped with a Puron Advance refrigerant TXV (sizes 18–60).

STANDARD FEATURES

- Refrigerant leak detection dissipation system for added safety
- Multi-tap ECM (electronic commutating motor) motors – all sizes.
- Integrated motor controls, with 90-sec off TDR function, have replaced integrated circuit board.
- Five available speed tags to meet a wide range of applications.
- Large, grooved tube, louvered fin coils.
- Efficient, quiet, time-tested blower housings and diffusers.
- Sturdy, drainable condensate pans.
- Construction innovations designed to prevent cabinet sweating.
- Tested for condensate disposal in much tougher conditions than Air Conditioning and Refrigeration Institute requirements.
- Super-thick R-4.2 insulation with vapor barrier.
- Pre-painted galvanized steel cabinet (taupe metallic).
- Design meets stringent regulations for cabinet air leakage of less than 2% when tested at 0.5 inches W.C., and less than 1.4% at 0.5 inches W.C. when tested in accordance with ASHRAE 193 standard.
- Installation-flexible, multipoise units.
- 2-piece modular design available for 42 thru 60 sizes. Facilitates attic and crawlspace installations..
- Horizontal hanging provisions on cabinet.
- Newly improved filter rack area filter door insulation added for improved air seal. No tools required to access filter.
- Factory-installed heater packages available on select models. (5 through 15 kW).
- 3 through 30 kW accessory heaters - field installed.
- Easy plug-in provisions for heater installation.
- Entry options for high and low voltage wiring hook-up.
- Leak-preventing sweat connections.
- Factory installed thermostatic expansion valve, TXV, on all coils.
- Designed for manufactured housing applications.

WARRANTY

- Default 5-year parts limited warranty:
  - 10-year parts limited warranty with timely registration*. Equipment must be registered within 90 days of original installation, except in jurisdictions where warranty benefits cannot be conditioned on registration.

  * Applies to original purchaser/homeowner and not available to subsequent owners, except in jurisdictions where laws dictate otherwise.

See Warranty certificate for complete details and restrictions.

Manufacturer reserves the right to change, at any time, specifications and designs without notice and without obligations.

MODEL NUMBER NOMENCLATURE

1	2	3	4	5	6	7	8	9	10	11	12
F	J	5	A	N	X	C	3	6	L	0	0

Product

F = Fan Coil

Type / Tier

J = Comfort™

Refrigerant Type

5 = Puron Advance R-454B

Major Series

A

Electrical

N = 208/230V, 1 ph, 60 Hz

Cabinet Type / Metering Device

B = Modular, TXV

X = Singular, TXV

Cabinet Width

A = 14"; B = 17"

C = 21"; D = 24"

Nominal Capacity

18 = 18,000

24 = 24,000

30 = 30,000

36 = 36,000

42 = 42,000

48 = 48,000

60 = 60,000

Coil Type

L = Aluminum

Electric Heater Size

00 = No Heat

05 = 5 kW

08 = 8 kW

10 = 10 kW

15 = 15 kW

Use of the AHRI Certified TM Mark indicates a manufacturer's participation in the program For verification of certification for individual products, go to www.ahridirectory.org.

A200435A

Table 1 – Models Available

1-1/2 Ton	2 Ton	2-1/2 Ton	3 Ton	3-1/2 Ton	4 Ton	5 Ton
FJ5ANXA18L00 FJ5ANXA18L05 FJ5ANXA18L08	FJ5ANXB24L00 FJ5ANXB24L05 FJ5ANXB24L10	FJ5ANXB30L00 FJ5ANXB30L08 FJ5ANXB30L10	FJ5ANXB36L00 FJ5ANXB36L10 FJ5ANXB36L15	FJ5ANBC42L00 FJ5ANXC42L00 FJ5ANXC42L10 FJ5ANXC42L15	FJ5ANBC48L00 FJ5ANXC48L00 FJ5ANXC48L10 FJ5ANXC48L15	FJ5ANBD60L00 FJ5ANXD60L00

DIMENSIONS

UNIT	SERIES	ELECTRICAL CHARACTERSTICS				A	B	C	D	E	F	G	H	J	COIL CONFIGURATION		SHIPPING WT (LBS)
															SLOPE	"A"	
FJ5ANXA18	A,B	X	*			42 11/16"	14 5/16"	12 7/16"	12 5/16"	10 7/16"	18 1/8"	18 5/8"	-	12"	X	-	120
FJ5ANXB24	A,B	X	*			49 5/8"	17 5/8"	15 3/4"	15 5/8"	15 3/8"	23 1/8"	23 5/8"	-	17"	X	-	131
FJ5ANXB30	A,B	X	*			49 5/8"	17 5/8"	15 3/4"	15 5/8"	15 7/8"	23 1/8"	23 1/2"	-	-	-	X	148
FJ5ANXB36	A,B	X	*			49 5/8"	17 5/8"	15 3/4"	15 5/8"	15 7/8"	23 1/8"	23 1/2"	-	-	-	X	148
FJ5ANBC42	A,B	X	*			53 7/16"	21 1/8"	19 1/4"	19 1/8"	19 1/2"	27 1/4"	26 15/16"	28 5/16"	-	-	X	166.5
FJ5ANXC42	A,B	X	*			49 5/8"	21 1/8"	19 1/4"	19 1/8"	15 11/16"	23 7/16"	23 1/8"	-	-	-	X	166
FJ5ANBC48	A	X	*			53 7/16"	21 1/8"	19 1/4"	19 1/8"	19 1/2"	27 1/4"	26 15/16"	28 5/16"	-	-	X	182.5
FJ5ANXC48	A	X	*			53 7/16"	21 1/8"	19 1/4"	19 1/8"	19 1/2"	27 1/4"	26 15/16"	-	-	-	X	182
FJ5ANBD60	A	X	*			59 3/16"	24 11/16"	22 3/4"	22 11/16"	25 1/4"	32 15/16"	32 5/8"	34 1/16"	-	-	X	210.5
FJ5ANXD60	A	X	*			59 3/16"	24 11/16"	22 3/4"	22 11/16"	25 1/4"	32 15/16"	32 5/8"	-	-	-	X	210
		208/230-1-60	208/230-3-60														

X=YES
O=NO
*=YES, DUE TO AVAILABLE FIELD INSTALLED HEATERS.

NOTE:

1. SERIES DESIGNATION IS THE 14TH POSITION OF UNIT PRODUCT NUMBER
2. ALL DIMENSIONS ARE IN "INCHES" UNLESS NOTED.

NOTE: ALLOW 21" FROM FRONT FOR SERVICE

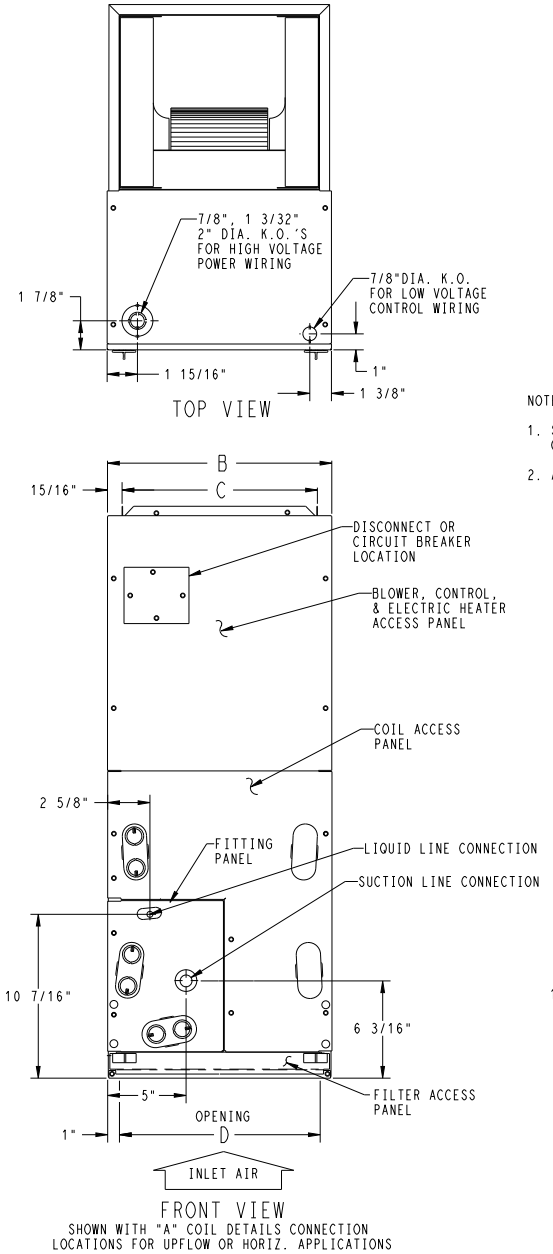

UNIT CONNECTION SIZES

SUCTION: 018 - 5/8" I.D. SWEAT
024 THRU 036 - 3/4" I.D. SWEAT
042 THRU 060 - 7/8" I.D. SWEAT
LIQUID: 3/8" I.D. SWEAT
CONDENSATE: 3/4" FPT

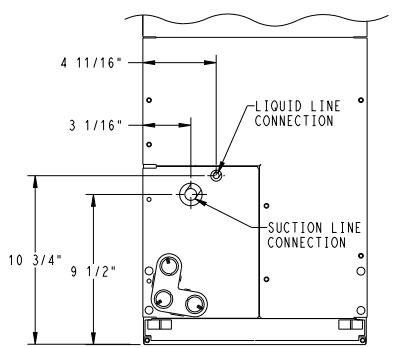

SLOPE COIL DETAILS
CONNECTION LOCATIONS SHOWN
FOR UPFLOW OR HORIZ.
LEFT APPLICATIONS

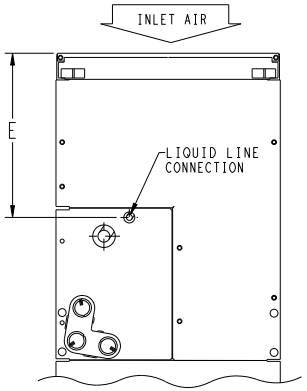

ACCESS PANEL CONFIG. FOR
SLOPE COILS
DOWNFLOW OR HORIZ.
RIGHT APPLICATIONS
AND
"A" COILS
DOWNFLOW APPLICATIONS

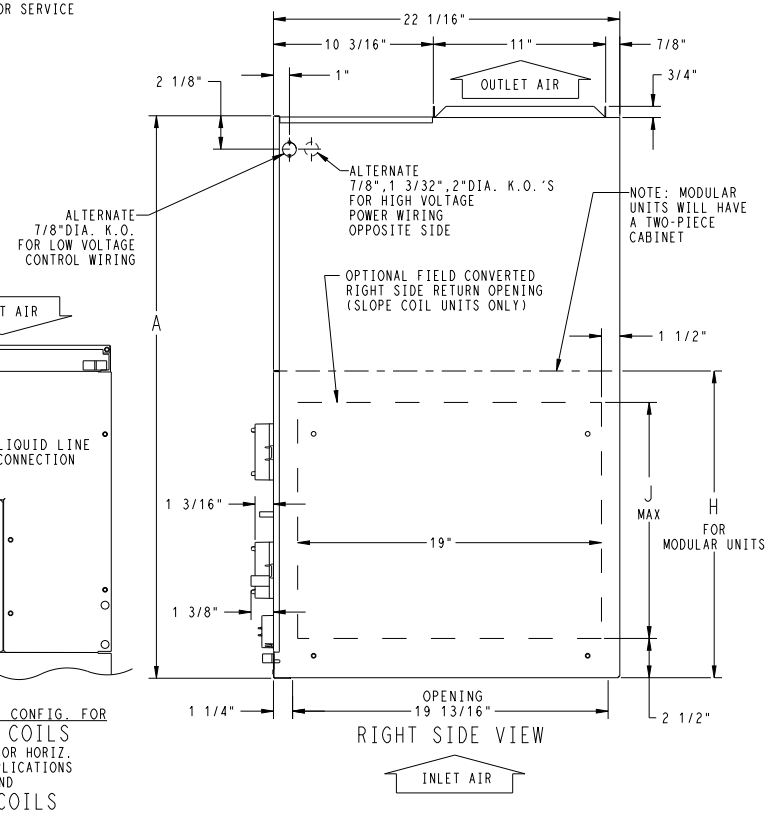

A230511A

Fig. 1 – FJ5 - English (sheet 1)

DIMENSIONS (cont.)

NOTES:

1. CONDENSATE PAN DRAIN CAPS NOT SHOWN FOR CLARITY.
2. ALL DIMENSIONS ARE IN "INCHES" UNLESS NOTED.

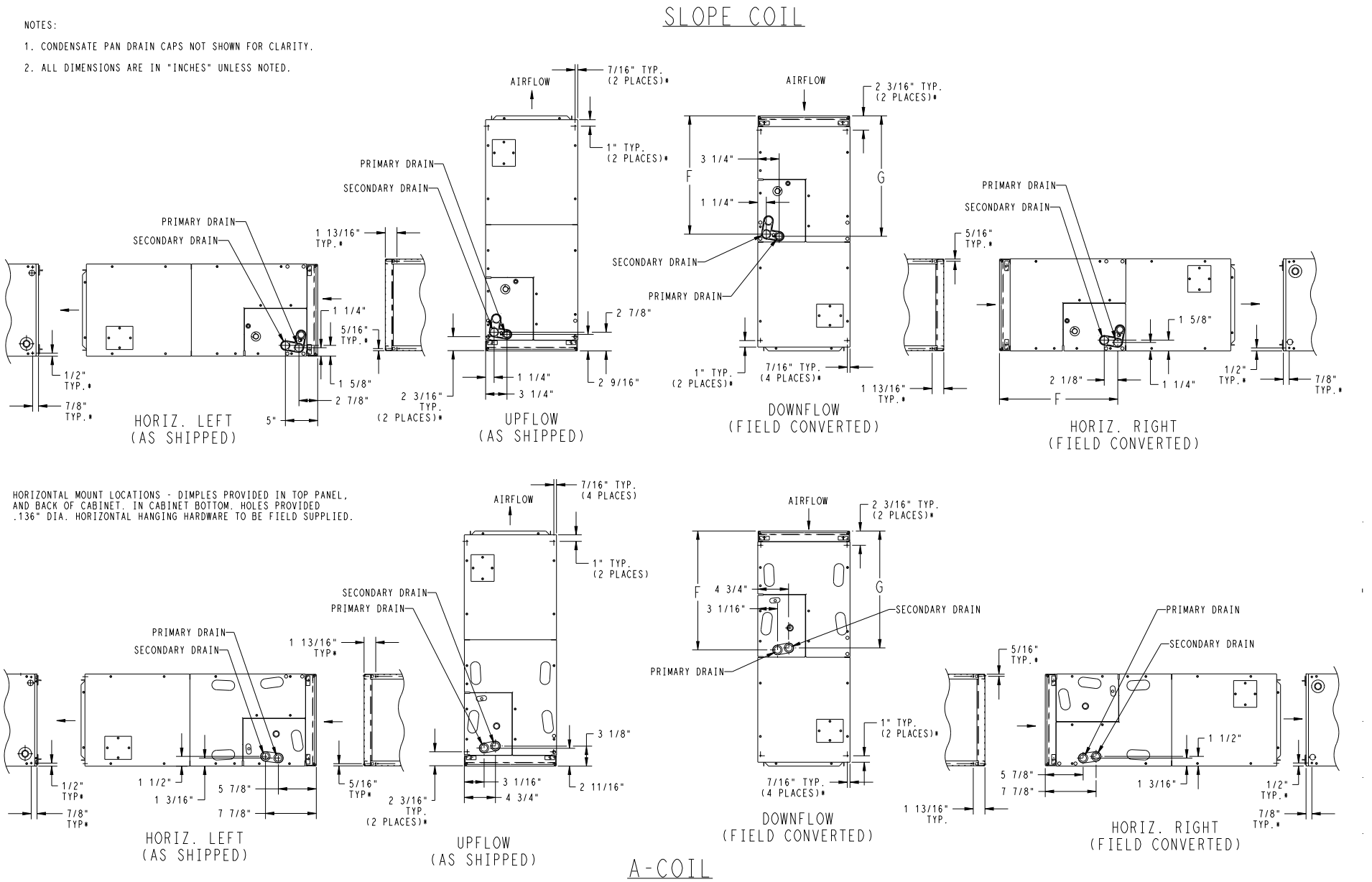

Fig. 2 – FJ5- English (sheet 2)

DIMENSIONS (cont.)

UNIT	SERIES	ELECTRICAL CHARACTERSTICS				A	B	C	D	E	F	G	H	J	COIL CONFIGURATION		SHIPPING WT (Kgs)
															SLOPE	"A"	
FJ5ANXA18	A,B	X	*			1084.3	363.6	315.9	312.8	265.1	460.4	473.1	-	304.8	X	-	54.5
FJ5ANXB24	A,B	X	*			1260.5	447.7	400.0	396.9	390.5	587.4	600.1	-	431.8	X	-	59.5
FJ5ANXB30	A,B	X	*			1260.5	447.7	400.0	396.9	403.2	587.4	596.9	-	-	-	X	67.2
FJ5ANXB36	A,B	X	*			1260.5	447.7	400.0	396.9	403.2	587.4	596.9	-	-	-	X	67.2
FJ5ANBC42	A,B	X	*			1357.3	536.6	489.0	485.8	495.3	692.2	684.2	719.1	-	-	X	75.5
FJ5ANXC42	A,B	X	*			1260.5	536.6	489.0	485.8	398.5	595.3	587.4	-	-	-	X	75.4
FJ5ANBC48	A	X	*			1357.3	536.6	489.0	485.8	495.3	692.2	684.2	719.1	-	-	X	82.8
FJ5ANXC48	A	X	*			1357.3	536.6	489.0	485.8	495.3	692.2	684.2	-	-	-	X	82.6
FJ5ANBD60	A	X	*			1503.4	627.1	577.8	576.3	641.4	836.6	828.7	865.2	-	-	X	95.5
FJ5ANXD60	A	X	*			1503.4	627.1	577.8	576.3	641.4	836.6	828.7	-	-	-	X	95.3
		208/230-1-60	208/230-3-60														

X=YES
O=NO
*=YES, DUE TO AVAILABLE FIELD INSTALLED HEATERS.

NOTE:

1. SERIES DESIGNATION IS THE 14TH POSITION OF UNIT PRODUCT NUMBER
2. ALL DIMENSIONS ARE IN "MM" UNLESS NOTED.

NOTE: ALLOW 533.4 FROM FRONT FOR SERVICE

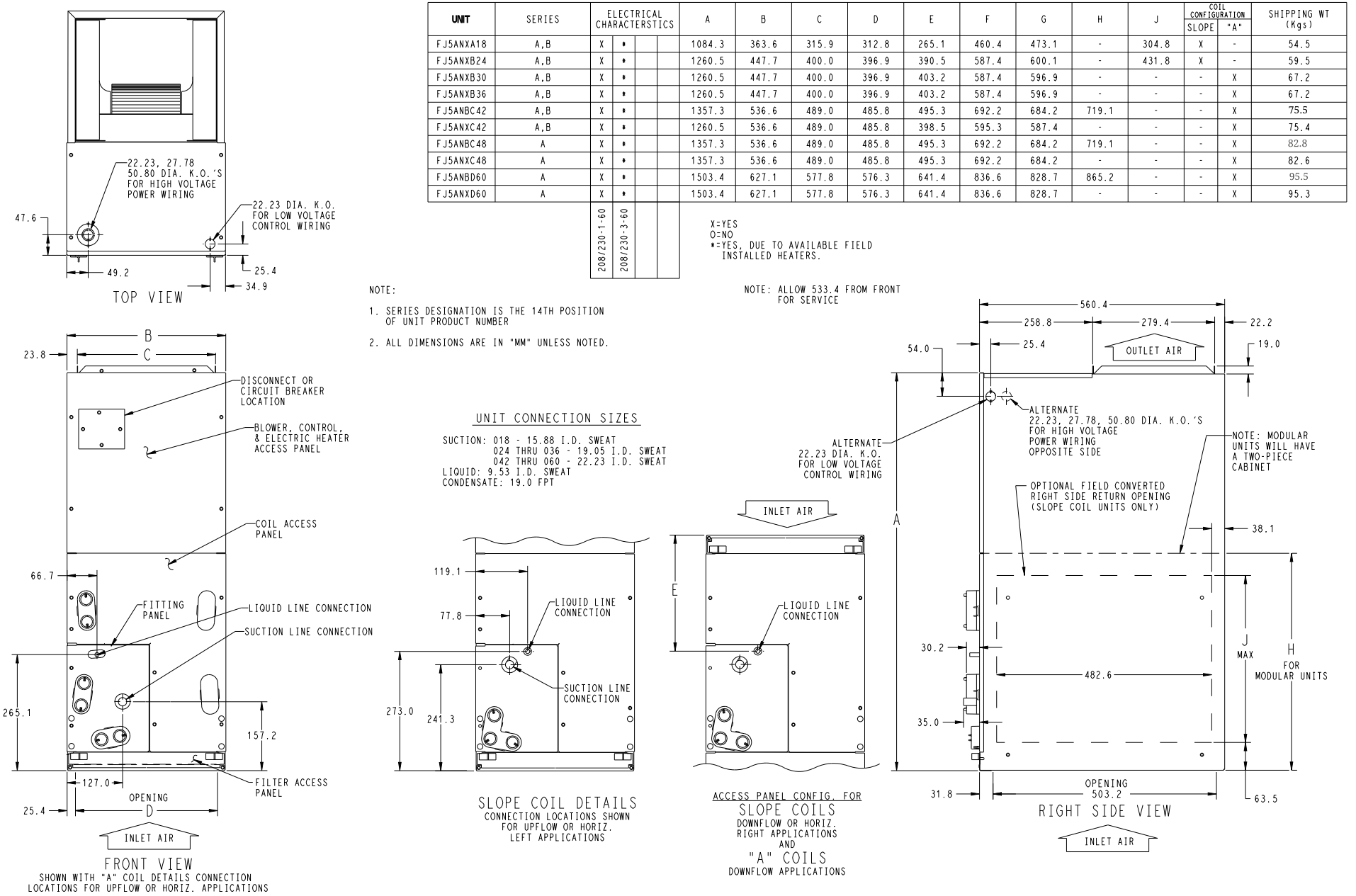

Fig. 3 – FJ5 - Metric (sheet 1)

DIMENSIONS (cont.)

NOTES:

1. CONDENSATE PAN DRAIN CAPS NOT SHOWN FOR CLARITY.
2. ALL DIMENSIONS ARE IN "MM" UNLESS NOTED.

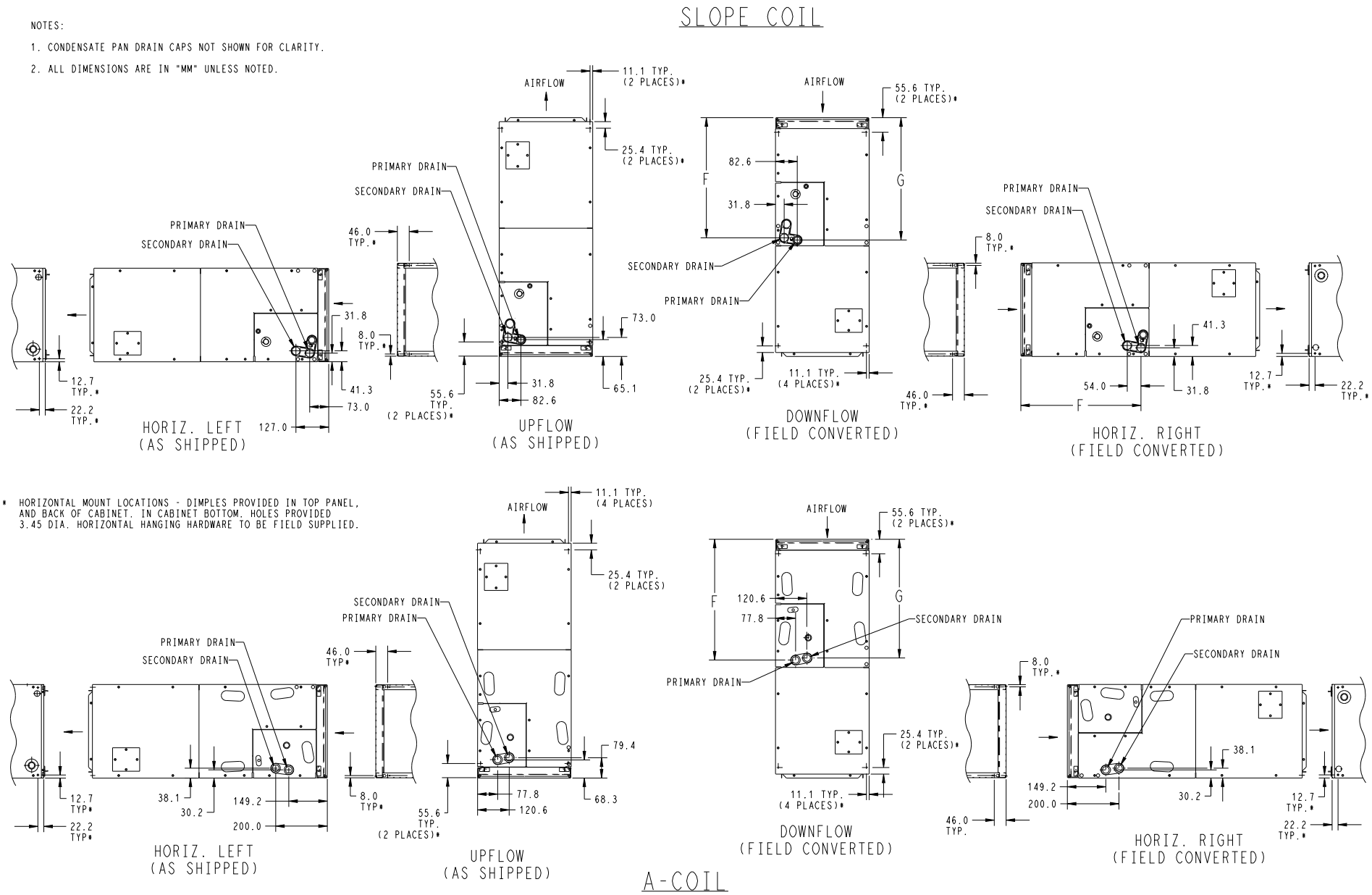

Fig. 4 – FJ5 - Metric (sheet 2)

Table 2 – PHYSICAL DATA

UNIT SIZE	NOMINAL COOLING CAPACITY (Btuh)	DIMENSIONS – IN (mm)			SHIPPING WEIGHT LB (KG)
		Height	Width	Depth	
18 Singular	18,000	42-11/16 in. (1084mm)	14-5/16 in. (364mm)	22-1/16 in. (560mm)	120 (54.4)
24 Singular	24,000	49-5/8 in. (1260mm)	17-5/8 in. (448mm)	22-1/16 in. (560mm)	131 (59.4)
30 Singular	30,000	49-5/8 in. (1260mm)	17-5/8 in. (448mm)	22-1/16 in. (560mm)	148 (67.1)
36 Singular	36,000	49-5/8 in. (1260mm)	17-5/8 in. (448mm)	22-1/16 in. (560mm)	148 (67.1)
42 Singular	42,000	49-5/8 in. (1260mm)	21-1/8 in. (537mm)	22-1/16 in. (560mm)	166 (75.3)
42 Modular	42,000	53-7/16 in. (1357mm)	21-1/8 in. (537mm)	22-1/16 in. (560mm)	166.5 (75.5)
48 Singular	48,000	53-7/16 in. (1357mm)	21-1/8 in. (537mm)	22-1/16 in. (560mm)	182 (82.5)
48 Modular	48,000	53-7/16 in. (1357mm)	21-1/8 in. (537mm)	22-1/16 in. (560mm)	182.5 (82.8)
60 Singular	60,000	59-3/16 in. (1503mm)	24-11/16 in. (627mm)	22-1/16 in. (560mm)	210 (95.2)
60 Modular	60,000	59-3/16 in. (1503mm)	24-11/16 in. (627mm)	22-1/16 in. (560mm)	210.5 (95.5)

Table 3 – SPECIFICATIONS

SIZE	18	24	30	36	42	48	60
EVAPORATOR COIL							
Face Area, ft^2 (m^2)	2.23 (0.21)	2.97 (0.28)	3.96 (0.37)		4.45 (0.41)	5.93 (0.55)	7.42 (0.69)
Configuration	Slope		A				
Refrigerant Sweat Liquid Line Connection, in (mm)	3/8 (9.5) ID						
Refrigerant Sweat Suction Line Connection, in (mm)	5/8 (15.9) ID	3/4 (19.1) ID			7/8 (22.2) ID		
Metering Device Puron®	TXV						
TXV Replacement P/N	EA66YU001	EA66YP001	EA66YP002		EA66YU002	EA66YU003	EA66YP003
FILTERS The fan coil filter rack can accommodate most common size filters as well as some smaller filters with minimal modification.							
Market Specified Filter Dimensions (W x L), in (mm)	13 x 20 (330 x 508)	16 x 20 (406 x 508)			20 x 20 (508 x 508)		24 x 20 (610 x 508)
Actual Filter Dimensions (W x L), in (mm) to Fit Fan Coil	up to 13.375 x 19.75 (340 x 502)	up to 16.5 x 19.75 (419 x 502)			up to 19.75 x 19.75 (502 x 502)		up to 23.75 x 19.75 (603 x 502)
BLOWER ASSEMBLY							
Motor Type (ECM)	Multi-tap ECM						
Motor HP	1/3	1/3	1/2	1/2	1/2	3/4	3/4
CFM	525	700	875	1050	1225	1400	1750
CABINET CONFIGURATIONS							
	Singular (1-piece)				Singular (1-piece) or Modular (2-piece)		

Manufacturer reserves the right to change, at any time, specifications and designs without notice and without obligations.

PERFORMANCE DATA

Table 4 – Airflow Performance (CFM) Wet

Ton (Size)	Blower Speed	External Static (in. wc)									
		0.1	0.2	0.3	0.4	0.5	0.6	0.7	0.8	0.9	1.0
1-1/2 (18)	Tap 5	754	737	717	694	668	641	605	572	528	481
	Tap 4	695	678	655	628	600	573	551	520	479	421
	Tap 3	695	678	655	628	600	573	551	520	479	421
	Tap 2	643	620	591	557	534	506	477	439	408	378
	Tap 1	487	448	428	394	358	325	281	NA	NA	NA
2 (24)	Tap 5	1021	1003	964	925	876	838	797	761	726	689
	Tap 4	936	907	873	805	779	732	696	661	626	591
	Tap 3	936	907	873	805	779	732	696	661	626	591
	Tap 2	846	831	792	739	702	651	609	548	536	491
	Tap 1	746	697	629	567	521	477	446	389	364	326
2-1/2 (30)	Tap 5	1247	1215	1188	1154	1122	1083	1053	1017	971	915
	Tap 4	1133	1114	1082	1044	1009	968	924	873	835	785
	Tap 3	1133	1114	1082	1044	1009	968	924	873	835	785
	Tap 2	1040	997	961	929	883	828	782	725	708	667
	Tap 1	896	862	805	740	689	648	597	NA	NA	NA
3 (36)	Tap 5	1433	1404	1363	1328	1282	1251	1201	1145	1095	1021
	Tap 4	1304	1277	1256	1230	1207	1168	1122	1080	1073	983
	Tap 3	1304	1277	1256	1230	1207	1168	1122	1080	1073	983
	Tap 2	1183	1148	1124	1094	1051	1005	955	901	846	783
	Tap 1	1020	995	958	921	881	840	791	735	693	649
3-1/2 (42)	Tap 5	1571	1551	1508	1473	1439	1407	1372	1317	1253	1189
	Tap 4	1517	1493	1458	1425	1392	1358	1328	1295	1253	1193
	Tap 3	1517	1493	1458	1425	1392	1358	1328	1295	1253	1193
	Tap 2	1369	1339	1299	1263	1226	1188	1155	1112	1068	1012
	Tap 1	1135	1099	1048	966	908	852	802	755	698	587
4 (48)	Tap 5	1896	1853	1821	1795	1760	1737	1702	1670	1665	1619
	Tap 4	1711	1673	1643	1607	1570	1549	1509	1490	1446	1411
	Tap 3	1711	1673	1643	1607	1570	1549	1509	1490	1446	1411
	Tap 2	1547	1504	1466	1416	1388	1369	1324	1290	1239	1200
	Tap 1	1397	1347	1312	1269	1232	1172	1135	1086	1038	989
5 (60)	Tap 5	2109	2067	2043	1996	1967	1928	1899	1848	1812	1766
	Tap 4	2109	2067	2043	1996	1967	1928	1899	1848	1812	1766
	Tap 3	2109	2067	2043	1996	1967	1928	1899	1848	1812	1766
	Tap 2	1901	1868	1825	1785	1737	1710	1662	1620	1584	1521
	Tap 1	1583	1557	1499	1451	1392	1358	1313	1259	1194	1138

NOTES:

1.Airflow based upon dry coil at 230V with factory-approved filter and electric heater (2 element heater sizes 018 through 036, 3 element heater sizes 042 through 060).

2.To avoid potential for condensate blowing out of drain pan prior to making drain trap: Return static pressure must be less than 0.40 in. wc. Horizontal applications of 042 - 060 sizes must have supply static greater than 0.20 in. wc. Airflow above 400 cfm/ton on 048-060 size could result in condensate blowing off coil or splashing out of drain pan.

3.At higher pextstats (above 0.6 in/wc), water blowoff is more likely to occur depending on the user's setup.

PERFORMANCE DATA (cont.)

Table 5 – Airflow Performance (CFM) Dry

Ton (Size)	Blower Speed	External Static (in. wc)									
		0.1	0.2	0.3	0.4	0.5	0.6	0.7	0.8	0.9	1.0
1-1/2 (18)	Tap 5	762	741	721	698	672	656	635	577	547	509
	Tap 4	695	679	655	628	600	580	559	534	505	452
	Tap 3	695	679	655	628	600	580	559	534	505	452
	Tap 2	634	615	585	547	522	506	475	444	407	371
	Tap 1	498	470	434	390	356	300	272	NA	NA	NA
2 (24)	Tap 5	1046	1013	978	958	925	877	830	752	722	687
	Tap 4	992	950	916	869	812	763	705	660	611	585
	Tap 3	992	950	916	869	812	763	705	660	611	585
	Tap 2	900	862	814	769	709	644	594	548	507	451
	Tap 1	762	723	651	599	531	471	428	385	345	319
2-1/2 (30)	Tap 5	1277	1244	1226	1193	1169	1122	1094	1058	1014	969
	Tap 4	1179	1142	1114	1070	1039	998	937	915	867	825
	Tap 3	1179	1142	1114	1070	1039	998	937	915	867	825
	Tap 2	1066	1030	997	960	916	863	795	746	703	674
	Tap 1	923	878	832	784	723	658	616	563	NA	NA
3 (36)	Tap 5	1489	1463	1428	1388	1345	1305	1262	1213	1160	1093
	Tap 4	1357	1337	1310	1283	1249	1212	1165	1114	1064	1014
	Tap 3	1357	1337	1310	1283	1249	1212	1165	1114	1064	1014
	Tap 2	1211	1190	1162	1132	1100	1066	1016	959	905	838
	Tap 1	1059	1038	1004	967	925	887	843	791	747	681
3-1/2 (42)	Tap 5	1647	1620	1583	1548	1505	1464	1424	1379	1319	1250
	Tap 4	1569	1539	1506	1476	1442	1404	1370	1336	1299	1219
	Tap 3	1569	1539	1506	1476	1442	1404	1370	1336	1299	1219
	Tap 2	1393	1355	1329	1288	1248	1223	1180	1138	1091	1037
	Tap 1	1190	1138	1083	1020	936	869	814	762	728	631
4 (48)	Tap 5	1956	1917	1887	1855	1831	1798	1763	1743	1707	1683
	Tap 4	1773	1743	1704	1667	1634	1612	1571	1536	1500	1464
	Tap 3	1773	1743	1704	1667	1634	1612	1571	1536	1500	1464
	Tap 2	1566	1524	1483	1451	1414	1376	1340	1303	1266	1217
	Tap 1	1413	1373	1328	1283	1246	1204	1168	1120	1075	1012
5 (60)	Tap 5	2148	2123	2084	2048	2002	1974	1939	1891	1893	1812
	Tap 4	2148	2123	2084	2048	2002	1974	1939	1891	1893	1812
	Tap 3	2148	2123	2084	2048	2002	1974	1939	1891	1893	1812
	Tap 2	1955	1913	1868	1833	1796	1757	1711	1654	1632	1570
	Tap 1	1646	1590	1527	1496	1442	1373	1315	1294	1221	1164

NOTES:

1. Airflow based upon dry coil at 230V with factory-approved filter and electric heater (2 element heater sizes 018 through 036, 3 element heater sizes 042 through 060).
2. To avoid potential for condensate blowing out of drain pan prior to making drain trap: Return static pressure must be less than 0.40 in. wc. Horizontal applications of 042 - 060 sizes must have supply static greater than 0.20 in. wc. Airflow above 400 cfm/ton on 048-060 size could result in condensate blowing off coil or splashing out of drain pan.
3. At higher pextstats (above 0.6 in/wc), water blowoff is more likely to occur depending on the user's setup.

Table 6 – Gross Cooling Capacities

Unit Size	INDOOR COIL AIR		SATURATED TEMPERATURE LEAVING EVAPORATOR (°F / °C)														
			35/2			40/4			45/7			50/10			55/13		
	CFM	EWB	TC	SHC	BF	TC	SHC	BF	TC	SHC	BF	TC	SHC	BF	TC	SHC	BF
18	525	72/22	42.80	20.80	0.00	38.40	18.70	0.00	33.50	16.50	0.01	27.90	14.10	0.02	21.70	11.70	0.02
		67/19	34.90	21.40	0.03	30.40	19.20	0.03	25.30	16.80	0.03	19.80	14.50	0.03	13.90	12.10	0.04
		62/17	27.70	21.90	0.03	23.20	19.60	0.03	18.50	17.30	0.04	14.90	14.90	0.13	12.20	12.20	0.28
	600	72/22	46.90	22.80	0.00	42.10	20.50	0.00	36.70	18.10	0.02	30.60	15.60	0.03	23.80	13.00	0.03
		67/19	38.30	23.70	0.04	33.40	21.20	0.04	27.80	18.70	0.04	21.60	16.10	0.04	15.20	13.40	0.05
		62/17	30.40	24.30	0.04	25.40	21.80	0.04	20.30	19.30	0.06	16.50	16.50	0.15	13.60	13.60	0.30
	675	72/22	50.60	24.60	0.00	45.40	22.20	0.02	39.60	19.70	0.03	33.00	17.00	0.04	25.60	14.10	0.04
		67/19	41.40	25.70	0.05	36.10	23.10	0.05	30.10	20.40	0.05	23.40	17.60	0.05	16.50	14.80	0.06
		62/17	32.90	26.60	0.05	27.50	23.90	0.05	22.10	21.10	0.07	18.10	18.10	0.17	14.90	14.90	0.32
24	700	72/22	54.40	26.40	0.00	49.20	24.00	0.00	43.30	21.40	0.01	36.40	18.50	0.02	28.60	15.50	0.03
		67/19	44.80	27.70	0.03	39.30	25.00	0.03	33.00	22.10	0.03	26.00	19.10	0.03	18.50	16.10	0.04
		62/17	35.80	28.60	0.03	30.20	25.80	0.03	24.30	22.90	0.04	19.70	19.70	0.13	16.30	16.30	0.28
	800	72/22	59.10	28.70	0.00	53.50	26.20	0.01	47.00	23.40	0.02	39.70	20.30	0.03	31.20	31.20	0.04
		67/19	48.70	30.40	0.04	42.90	27.60	0.04	36.10	24.50	0.04	28.30	21.20	0.04	20.20	17.90	0.05
		62/17	39.10	31.60	0.04	33.00	28.60	0.05	26.60	25.40	0.06	21.90	21.90	0.16	18.10	18.10	0.30
	900	72/22	63.20	30.80	0.00	57.20	28.20	0.02	50.40	25.20	0.04	42.60	22.00	0.04	33.50	18.60	0.05
		67/19	52.30	32.80	0.05	46.10	29.90	0.05	38.90	26.70	0.05	30.50	23.20	0.05	21.80	19.60	0.06
		62/17	42.10	34.50	0.05	35.60	31.30	0.06	28.80	27.90	0.07	24.00	24.00	0.18	19.80	19.80	0.32
30	875	72/22	71.60	34.70	0.00	64.40	31.30	0.00	56.30	27.70	0.00	47.20	23.80	0.02	36.80	19.70	0.02
		67/19	58.70	36.00	0.02	51.30	32.30	0.03	42.90	28.40	0.03	33.60	24.40	0.03	23.70	20.30	0.04
		62/17	46.70	36.80	0.03	39.20	33.00	0.03	31.20	29.10	0.04	25.00	25.00	0.12	20.60	20.60	0.27
	1000	72/22	78.30	38.00	0.00	70.50	34.40	0.00	61.60	30.50	0.02	51.70	26.30	0.03	40.30	21.90	0.03
		67/19	64.30	39.70	0.03	56.30	35.80	0.03	47.10	31.50	0.04	36.80	27.10	0.04	26.00	22.70	0.05
		62/17	51.40	40.90	0.04	43.10	36.70	0.04	34.40	32.40	0.05	27.90	27.90	0.14	23.00	23.00	0.29
	1125	72/22	84.30	41.00	0.00	75.90	37.20	0.00	66.80	33.20	0.02	55.80	28.60	0.04	43.60	23.80	0.04
		67/19	69.40	43.10	0.04	60.80	38.90	0.04	51.00	34.50	0.05	39.80	29.70	0.05	28.10	24.90	0.06
		62/17	55.60	44.80	0.05	46.70	40.30	0.05	37.30	35.60	0.06	30.60	30.60	0.16	25.20	25.20	0.31
36	1050	72/22	64.89	33.39	0.00	58.38	30.18	0.00	51.08	26.68	0.02	42.84	22.99	0.03	33.40	19.04	0.03
		67/19	53.14	34.96	0.04	46.48	31.47	0.04	38.88	27.72	0.04	30.22	23.74	0.04	21.13	19.74	0.05
		62/17	42.35	36.18	0.04	35.45	32.44	0.04	28.12	28.54	0.05	22.73	22.73	0.15	18.64	18.64	0.29
	1200	72/22	70.55	36.42	0.00	63.54	32.99	0.02	55.62	29.26	0.03	46.67	25.30	0.04	36.48	21.08	0.05
		67/19	57.90	38.43	0.05	50.70	34.71	0.05	42.55	30.74	0.05	33.13	26.44	0.05	23.14	22.04	0.06
		62/17	46.31	40.09	0.05	38.86	36.09	0.05	31.02	31.87	0.07	25.31	25.31	0.17	20.78	20.78	0.31
	1350	72/22	75.52	39.17	0.00	68.14	35.55	0.03	59.70	31.64	0.04	50.12	27.45	0.05	39.26	23.00	0.06
		67/19	62.18	41.63	0.06	54.49	37.72	0.06	45.77	33.52	0.06	35.75	28.98	0.06	25.00	24.22	0.08
		62/17	49.84	43.73	0.06	42.00	39.53	0.07	33.71	35.01	0.09	27.74	27.74	0.20	22.79	22.79	0.33

Manufacturer reserves the right to change, at any time, specifications and designs without notice and without obligations.

Table 6 – Gross Cooling Capacities

Unit Size	INDOOR COIL AIR		SATURATED TEMPERATURE LEAVING EVAPORATOR (°F / °C)														
			35/2			40/4			45/7			50/10			55/13		
	CFM	EWB	TC	SHC	BF	TC	SHC	BF	TC	SHC	BF	TC	SHC	BF	TC	SHC	BF
42	1225	72/22	79.15	40.41	0.00	70.85	36.31	0.00	61.59	31.90	0.02	51.15	27.24	0.03	39.41	22.38	0.04
		67/19	64.55	42.04	0.04	56.05	37.58	0.04	46.51	32.90	0.04	35.85	28.04	0.04	24.90	23.25	0.05
		62/17	51.09	43.18	0.04	42.46	38.53	0.05	33.59	33.84	0.06	27.05	27.05	0.15	22.11	22.11	0.30
	1400	72/22	86.34	44.20	0.00	77.30	39.79	0.01	67.22	35.05	0.03	55.91	30.07	0.04	43.10	24.80	0.05
		67/19	70.55	46.30	0.05	61.37	41.55	0.05	50.95	36.50	0.05	39.20	31.18	0.06	27.27	25.94	0.07
		62/17	56.04	47.92	0.06	46.63	42.89	0.06	36.98	37.71	0.08	30.12	30.12	0.18	24.63	24.62	0.32
	1575	72/22	92.81	47.68	0.00	83.15	42.98	0.03	72.31	37.96	0.05	60.17	32.67	0.06	46.45	27.07	0.06
		67/19	76.00	50.25	0.06	66.13	45.22	0.06	55.01	39.88	0.07	42.37	34.20	0.07	29.47	28.50	0.08
		62/17	60.57	52.40	0.07	50.47	47.01	0.07	40.22	41.43	0.09	33.01	33.01	0.20	26.99	26.99	0.34
48	1400	72/22	83.95	44.30	0.00	75.71	40.05	0.00	66.36	35.45	0.01	55.84	30.58	0.02	43.82	25.38	0.03
		67/19	68.80	46.22	0.03	60.32	41.61	0.03	50.67	36.70	0.03	39.64	31.45	0.03	27.80	26.12	0.04
		62/17	54.96	47.71	0.03	46.12	42.77	0.03	36.69	37.67	0.04	29.32	29.32	0.13	24.10	24.10	0.28
	1600	72/22	91.53	48.40	0.00	82.59	43.90	0.00	72.47	38.97	0.02	61.02	33.73	0.03	48.01	28.16	0.04
		67/19	75.19	50.91	0.04	65.98	45.99	0.04	55.57	40.75	0.04	43.57	35.09	0.04	30.49	29.21	0.05
		62/17	60.21	52.94	0.04	50.73	47.68	0.04	40.48	42.10	0.06	32.72	32.72	0.15	26.92	26.92	0.30
	1800	72/22	98.31	52.15	0.00	88.79	47.39	0.02	77.99	42.21	0.03	65.70	36.65	0.04	51.81	30.76	0.05
		67/19	80.94	55.25	0.05	71.10	50.06	0.05	59.93	44.50	0.05	47.14	38.52	0.05	32.96	32.14	0.06
		62/17	64.96	57.83	0.05	54.92	52.30	0.05	44.06	46.35	0.07	35.97	35.97	0.17	29.59	29.59	0.31
60	1600	72/22	118.17	60.42	0.00	106.56	54.57	0.00	93.41	48.24	0.02	78.64	41.59	0.02	62.13	34.63	0.03
		67/19	96.74	62.87	0.03	84.83	56.56	0.03	71.43	49.91	0.03	56.41	42.93	0.03	39.37	35.48	0.04
		62/17	77.24	64.78	0.03	65.10	58.16	0.03	51.83	51.23	0.04	41.00	41.00	0.12	33.67	33.67	0.27
	1750	72/22	129.14	66.15	0.00	116.46	59.92	0.00	102.18	53.13	0.02	86.08	45.94	0.03	68.00	38.39	0.03
		67/19	105.94	69.36	0.04	92.95	62.59	0.04	78.33	55.41	0.04	61.93	47.86	0.04	43.49	39.82	0.05
		62/17	84.76	71.94	0.04	71.53	64.80	0.04	57.37	57.38	0.05	45.94	45.94	0.14	37.65	37.65	0.29
	2000	72/22	139.03	71.41	0.00	125.46	64.82	0.01	110.15	57.64	0.03	92.83	49.99	0.04	73.33	41.92	0.04
		67/19	114.27	75.38	0.05	100.34	68.21	0.05	84.61	60.58	0.05	66.92	52.51	0.05	47.25	43.94	0.06
		62/17	91.59	78.67	0.05	77.41	71.08	0.05	62.32	63.11	0.07	50.60	50.60	0.16	41.54	41.54	0.31

CFM - Cubic Ft per Minute **EWB** - Entering Wet Bulb °F (°C) **LWB** - Leaving Wet Bulb °F (°C) **TC** - Gross Cooling Capacity 1000 Btuh

SHC - Gross Sensible Capacity 1000 Btuh **BF** - Bypass Factor **MBH** - 1000 Btuh

NOTES:

1. Contact manufacturer for cooling capacities at conditions other than shown in table.
2. Formulas:
   Leaving db = entering db $-\frac{\text{sensible heat cap.}}{1.09 \times \text{CFM}}$
   Leaving wb = wb corresponding to enthalpy of air leaving coil (h_{lwb})
   $h_{lwb} = h_{ewb} - \frac{\text{total capacity (Btuh)}}{4.5 \times \text{CFM}}$
   where h_{ewb} = enthalpy of air entering coil. Direct interpolation is permissible. Do not extrapolate.
3. SHC is based on 80_F (27_C) db temperature of air entering coil. Below 80_F (27_C) db, subtract (Correction Factor x CFM) from SHC. Above 80_F (27_C) db, add (Correction Factor x CFM) to SHC.
4. Bypass Factor = 0 indicates no psychometric solution. Use bypass factor of next lower EWB for approximation.

SHC CORRECTION FACTOR

BYPASS FACTOR	ENTERING AIR DRY-BULB TEMPERATURE (°F)					
	79	78	77	76	75	Under 75
	81	82	83	84	85	Over 85
	ENTERING AIR DRY-BULB TEMPERATURE (°C)					
	26	25	25	24	24	Under 75
	27	28	28	29	29	Over 85
	Correction Factor					
0.10	.098	1.96	2.94	3.92	4.91	Use formula shown below
0.20	0.87	1.74	2.62	3.49	4.36	
0.30	0.76	1.53	2.29	3.05	3.82	

Interpolation is permissible.
Correction Factor = 1.09 x (1 - BF) x (db - 80)

Manufacturer reserves the right to change, at any time, specifications and designs without notice and without obligations.

PERFORMANCE DATA (cont.)

Table 7 – Electric Heater Static Pressure Drop (in wc)

SIZES 18 - 36			SIZES 42 - 60		
HEATER ELEMENTS	kW	EXTERNAL STATIC PRESSURE CORRECTION	HEATER ELEMENTS	kW	EXTERNAL STATIC PRESSURE CORRECTION
0	0	+.02	0	0	+.04
1	3, 5	+.01	1	3, 5	+.03
2	8, 10	0	2	8, 10	+.02
3	9, 15	–.02	3	9, 15	0
4	20	–.04	4	20	–.02
			6	18, 24, 30	–.10

The airflow performance data was developed using fan coils with 10-kW electric heaters (2 elements) in the 018 through 036 size units and 15-kW heaters (3 elements) in the 042 through 061 size units. For fan coils with heaters of a different number of elements, the external available static at a given CFM from the curve may be corrected by adding or subtracting available external static pressure as indicated above.

Table 8 – Minimum CFM and Motor Speed Selection

SIZE	HEATER kW									
	3	5	8	9	10	15	18	20	24	30
18	525	525	525	—	600	—	—	—	—	—
24	700	700	700	—	700	775	—	—	—	—
30	—	875	875	—	875	875	—	1060	—	—
36	—	1050	970	970	970	920	—	1040	—	—
42	—	—	1225	1225	1225	1225	1225	1225	—	—
48	—	—	1400	1400	1400	1400	1400	1400	1400	1400
60	—	—	1750	1750	1750	1750	1750	1750	1750	1750

Speed Tap 4 (white wire) is used for electric heat only. White wire must remain on tap 4.

Table 9 – Estimated Sound Power Level (dB)*

SIZE	CONDITIONS		OCTAVE BAND CENTER FREQUENCY						
	CFM	Ext Static Pressure	63	125	250	500	1000	2000	4000
18	525	0.50	70.8	66.8	62.8	59.8	57.8	55.8	51.8
24	700	0.50	72.0	68.0	64.0	61.0	59.0	57.0	53.0
30	875	0.50	73.0	69.0	65.0	62.0	60.0	58.0	54.0
36	1050	0.50	73.8	69.8	65.8	62.8	60.8	58.8	54.8
42	1225	0.50	74.4	70.4	66.4	63.4	61.4	59.4	55.4
48	1400	0.50	75.0	71.0	67.0	64.0	62.0	60.0	56.0
60	1750	0.50	76.0	72.0	68.0	65.0	63.0	61.0	57.0

* Estimated sound power levels have been derived using the method described in the 1987 ASHRAE HVAC Systems & Applications Handbook, Chapter 52, p. 52.7.

Manufacturer reserves the right to change, at any time, specifications and designs without notice and without obligations.

PERFORMANCE DATA (cont.)

Table 10 – EH Heater Table

HEATER PART NO.	kW @ 240V	VOLTS/PH	STAGES (kW OPERATING)	INTERNAL CIRCUIT PROTECTION	FAN COIL SIZE USED WITH	HEATING CAP.* @ 230V
KFFEH8401N03	3	230/1	3	None	18†	9,400
KFFEH8501N05	5	230/1	5	None	18†	15,700
KFFEH8801N08	8	230/1	8	None	18†	25,100
KFFEH8901N10	10	230/1	10	None	18†	31,400
KFFEH0401N03	3	230/1	3	None	24	9,400
KFFEH0501N05	5	230/1	5	None	24–60	15,700
KFFEH0801N08	8	230/1	8	None	24–60	25,100
KFFEH0901N10	10	230/1	10	None	24–60	31,400
KFFEH3201F20	20	230/1	5, 20	Fuse‡	30–60	62,800
KFFEH8401C05	5	230/1	5	Circuit Breaker	18†	15,700
KFFEH8501C08	8	230/1	8	Circuit Breaker	18†	25,100
KFFEH8601C10	10	230/1	10	Circuit Breaker	18†	31,400
KFFEH2401C05	5	230/1	5	Circuit Breaker	24–60	15,700
KFFEH2501C08	8	230/1	8	Circuit Breaker	24–60	25,100
KFFEH2601C10	10	230/1	10	Circuit Breaker	24–60	31,400
KFFEH3301C20	20	230/1	5, 20	Circuit Breaker	30–60	62,800
KFFEH2901N09	9	230/1**	3, 9	None	36–60	28,200
KFFEH3001F15	15	230/1	5, 15	Fuse‡	24–60	47,100
KFFEH3101C15	15	230/1	5, 15	Circuit Breaker	24–60	47,100
3 Phase Only						
KFFEH1601315	15	230/3	5, 15	None	36–60	47,100
KFFEH2001318	18	230/3	6, 12, 18	None	42–60	56,500
3 Phase, Factory Shipped (field convertible to single phase)						
KFFEH3401F24	24	230/3	8, 16, 24	Fuse	48, 60	78,300
KFFEH3501F30	30	230/3	10, 20, 30	Fuse	48, 60	94,100

*. Does not include heat from blower motor.
†. Size 18 fan coil has a special 6-pin connector. Do not modify wiring.
‡. Single point wiring kit required for these heaters.
**. Field convertible to 3 phase.

Table 11 – Electrical Data for Units without Electric Heat

MODEL SIZE	MTR HP	MTR FLA	VOLTS/PH/HZ	SINGLE CIRCUIT		BRANCH CIRCUIT MIN WIRE SIZE* AWG
				MCA	MAXMUM OVERCURRENT PROTECION	
18	1/3	2.9	208/230/1/60	3.6	15	14
24	1/3	2.9	208/230/1/60	3.6	15	14
30	1/2	4.2	208/230/1/60	5.3	15	14
36	1/2	4.2	208/230/1/60	5.3	15	14
42	1/2	4.2	208/230/1/60	5.3	15	14
48	3/4	6.1	208/230/1/60	7.6	15	14
60	3/4	6.1	208/230/1/60	7.6	15	14

* Use copper wire only. Use 75_C only in this application. When using non-metallic (NM) sheathed cable, wire size required should be based on that of 60_C conductors, instead of wire sizes shown in table above per NEC Article 336-26.

NOTE: If branch circuit wire length exceeds 100 ft (30 m), consult NEC 215-2 to determine maximum wire length. Use 2% voltage drop.

FLA - Full Load Amps

SCCR (Short Circuit Current Rating) = 5kA rms, symmetrical, 230V

PERFORMANCE DATA (cont.)

HEATER ELECTRICAL DATA

Table 12 – Electric Heater Internal Protection

HEATER kW	PHASE	FUSE QTY/SIZE	CKT BKR* QTY/SIZE
5	1	—	1/60
8	1	—	1/60
9	1/3	—	—
10	1	—	1/60
15	1	2/30–2/60	2/60
15	3	—	—
18	3	—	—
20	1	4/60	2/60
24	1/3	6/60	—
30	1/3	6/60	—

* All circuit breakers are 2 pole.

When using units with 20-, 24-, and 30-kW electric heaters, maintain a 1-in. (25mm) clearance from combustible materials to discharge plenum and ductwork and maintain a distance of 36-in (914mm) from the unit. Use an accessory downflow base to maintain proper clearance on downflow installations. Use flexible connectors between ductwork and unit to prevent transmission of vibration. When electric heater is installed, use heat resistant material for flexible connector between ductwork and unit at discharge connection. Ductwork passing through unconditioned space must be insulated and covered with vapor barrier.

Table 13 – Electric Heater Electrical Data

FC Size	HEATER PART NO.	kW		PHASE	Internal Circuit Protection	HEATER AMPS* 208/230V†			MIN AMPACITY* 208/230V†			BRANCH CIRCUIT								
												Min Wire Size (AWG) 208/230V‡			Min Gnd Wire Size 208/230V‡			Max Fuse/Ckt Bkr Amps 208/230V		
						Single Circuit	Dual Circuit		Single Circuit	Dual Circuit		Single Circuit	Dual Circuit		Single Circuit	Dual Circuit		Single Circuit	Dual Circuit	
		240V	208V				L1,L2	L3,L4		L1,L2	L3,L4		L1,L2	L3,L4		L1,L2	L3,L4		L1,L2	L3,L4
24	KFFEH0401N03	3	2.3	1	None	10.7/11.9	—	—	17.0/18.5	—	—	12/12	—	—	12/12	—	—	20/20	—	—
18	KFFEH8401N03	3	2.3	1	None	10.7/11.9	—	—	17.0/18.5	—	—	12/12	—	—	12/12	—	—	20/20	—	—
24-42	KFFEH0501N05	5	3.8	1	None	17.8/19.7	—	—	27.5/29.9	—	—	10/10	—	—	10/10	—	—	30/30	—	—
24-42	KFFEH2401C05	5	3.8	1	Ckt Bkr	17.8/19.7	—	—	27.5/29.9	—	—	10/10	—	—	10/10	—	—	30/30	—	—
48-60	KFFEH0501N05	5	3.8	1	None	17.8/19.7	—	—	29.9/32.3	—	—	10/8	—	—	10/10	—	—	30/35	—	—
48-60	KFFEH2401C05	5	3.8	1	Ckt Bkr	17.8/19.7	—	—	29.9/32.3	—	—	10/8	—	—	10/10	—	—	30/35	—	—
18	KFFEH8501N05	5	3.8	1	None	17.8/19.7	—	—	25.9/28.3	—	—	10/10	—	—	10/10	—	—	30/30	—	—
18	KFFEH8401C05	5	3.8	1	Ckt Bkr	17.8/19.7	—	—	25.9/28.3	—	—	10/10	—	—	10/10	—	—	30/30	—	—
24-60	KFFEH0801N08	8	6.0	1	None	28.5/31.5	—	—	43.3/47.0	—	—	8/8	—	—	10/10	—	—	45/50	—	—
24-60	KFFEH2501C08	8	6.0	1	Ckt Bkr	28.5/31.5	—	—	43.3/47.0	—	—	8/8	—	—	10/10	—	—	45/50	—	—
18	KFFEH8801N08	8	6.0	1	None	28.5/31.5	—	—	39.3/43.0	—	—	8/8	—	—	10/10	—	—	40/45	—	—
18	KFFEH8501C08	8	6.0	1	Ckt Bkr	28.5/31.5	—	—	39.3/43.0	—	—	8/8	—	—	10/10	—	—	40/45	—	—
24-60	KFFEH0901N10	10	7.5	1	None	35.6/39.4	—	—	52.1/56.9	—	—	6/6	—	—	10/10	—	—	60/60	—	—
24-60	KFFEH2601C10	10	7.5	1	Ckt Bkr	35.6/39.4	—	—	52.1/56.9	—	—	6/6	—	—	10/10	—	—	60/60	—	—
18	KFFEH8901N10	10	7.5	1	None	35.6/39.4	—	—	48.1/52.9	—	—	8/6	—	—	10/10	—	—	50/60	—	—
18	KFFEH8601C10	10	7.5	1	Ckt Bkr	35.6/39.4	—	—	48.1/52.9	—	—	8/6	—	—	10/10	—	—	50/60	—	—
36-60	KFFEH2901N09**	9	6.8	1	None	32.2/35.6	—	—	47.9/52.1	—	—	8/6	—	—	10/10	—	—	50/60	—	—
36-60	KFFEH2901N09	9	6.8	3	None	18.6/20.6	—	—	30.9/33.4	—	—	8/8	—	—	10/10	—	—	40/40	—	—
24-60	KFFEH3001F15††	15	11.3	1	Fuse	53.4/59.1	35.6/39.4	17.8/19.7	74.4/81.5	52.1/56.9	22.3/24.6	4/4	6/6	10/10	8/8	10/10	10/10	80/90	60/60	25/25
24-60	KFFEH3101C15	15	11.3	1	Ckt Bkr	53.4/59.1	35.6/39.4	17.8/19.7	74.4/81.5	52.1/56.9	22.3/24.6	4/4	6/6	10/10	8/8	10/10	10/10	80/90	60/60	25/25
36-60	KFFEH1601315	15	11.3	3	Fuse	30.8/34.1	—	—	46.1/50.3	—	—	8/6	—	—	10/10	—	—	50/60	—	—
42-60	KFFEH2001318	18	13.5	3	None	37.2/41.2	—	—	54.1/59.1	—	—	6/6	—	—	10/10	—	—	60/70	—	—
30-60	KFFEH3201F20††	20	15.0	1	Fuse	71.2/78.8	35.6/39.4	35.6/39.4	96.6/106.1	52.1/56.9	44.5/49.3	3/2	6/6	8/8	8/6	10/10	10/10	100/110	60/60	45/50
30-60	KFFEH3301C20	20	15.0	1	Ckt Bkr	71.2/78.8	35.6/39.4	35.6/39.4	96.6/106.1	52.1/56.9	44.5/49.3	3/2	6/6	8/8	8/6	10/10	10/10	100/110	60/60	45/50
48-60	KFFEH3401F24‡‡	24	18.0	3	Fuse	49.3/54.6	—	—	69.3/75.9	—	—	4/4	—	—	8/8	—	—	80/80	—	—
48-60		24	18.0	1	Fuse	85.5/94.5	—	—	114.5/125.8	—	—	2/1	—	—	6/6	—	—	125/150	—	—
48-60	KFFEH3501F30‡‡	30	22.5	3	Fuse	61.7/68.2	—	—	84.8/92.9	—	—	4/3	—	—	8/8	—	—	90/100	—	—
48-60		30	22.5	1	Fuse	106.8/118.1	—	—	141.1/155.3	—	—	0/00	—	—	6/6	—	—	150/175	—	—

*. Includes blower motor amps of largest fan coil used with heater. Consult Product Data for specific motor amps.
†. For 240V, multiply 230V heater amps by 1.04. Wire sizing and over-current protection may need adjustment per local code requirements.
‡. Copper wire must be used. If other than uncoated (non-plated), 75°C ambient, copper wire (solid wire for smaller, and stranded wire for larger than 10 AWG) is used, consult applicable tables of the National Electric Code (ANSI/NFPA 70).
**. Field convertible to 3 phase.
††. Single circuit application of F15 and F20 heaters requires single-point wiring kit accessory.
‡‡. Field convertible to 1 phase, single or multiple supply circuit.

Table 14 – Field Multipoint Wiring or 24- and 30-kW Single Phase

FC Size	HEATER PART NO.	kW		PHASE	HEATER AMPS 208/230V			MIN AMPACITY 208/230V*			MIN WIRE SIZE (AWG) 208/230V†			MIN GND WIRE SIZE 208/230V	MAX FUSE/CKT BKR AMPS 208/230V		
		240V	208V		L1,L2	L3,L4	L5,L6	L1,L2	L3,L4	L5,L6	L1,L2	L3,L4	L5,L6		L1,L2	L3,L4	L5,L6
48-60	KFFEH3401F24‡	24	18.0	1	28.5/31.5	28.5/31.5	28.5/31.5	43.3/47.0	35.6/39.4	35.6/39.4	8/8	8/8	8/8	10/10	50/50	40/40	40/40
48-60	KFFEH3501F30‡	30	22.5	1	35.6/39.4	35.6/39.4	35.6/39.4	52.1/56.9	44.5/49.3	44.5/49.3	6/6	8/8	8/8	10/10	60/60	45/50	45/50

*. Includes blower motor amps of largest fan coil used with heater.
†. Copper wire must be used. If other than uncoated (non-plated), 75°C ambient, copper wire (solid wire for 10 AWG and smaller, stranded wire for larger than 10 AWG) is used, consult applicable tables of the NEC (ANSI/NFPA 70).

‡. Field convertible to 1 phase, single or multiple supply circuit.

Table 15 – Accessories

ITEM		ACCESSORY PART NO.*	FAN COIL SIZE USED WITH
1.	Disconnect Kit	KFADK0301DSC	All single phase 3kW - 10kW heaters
2.	Downflow Base Kit	KFACB0101CFB	18
		KFACB0201CFB	24, 30, 36
		KFACB0301CFB	42, 48
		KFACB0401CFB	60
3.	Downflow Conversion Kit †	KFADC0201SLP	Slope Coil Units—18, 24
		KFADC0401ACL	A-Coil Units—30, 36, 42, 48, 60
4.	Downflow/Horizontal Conversion Gasket Kit	KFAHD0101SLP	All
5.	Horizontal Water Management Kit (25 pack) ‡	KFAHC0125AAA	A-Coil Units—30, 36, 42, 48, 60
6.	Single-Point Wiring Kit	KFASP0101SPK	Only with 15- and 20-kW Fused Heaters
7.	Filter	See Table 3 for filter dimension details.	
8.	Fan Coil Filter Cabinet (Fan Coil Filter Media)	FNCCABXX0014 (MERV 8—FILXXFNC0014) (MERV 11—FILXXFNC0114) (MERV 13—FILXXFNC0314)	18
		FNCCABXX0017 (MERV 8—FILXXFNC0017) (MERV 11—FILXXFNC0117) (MERV 13—FILXXFNC0317)	24, 30, 36
		FNCCABXX0021 (MERV 8—FILXXFNC0021) (MERV 11—FILXXFNC0121) (MERV 13—FILXXFNC0321)	42, 48
		FNCCABXX0024 (MERV 8—FILXXFNC0024) (MERV 11—FILXXFNC0124) (MERV 13—FILXXFNC0324)	60
9.	PVC Condensate Trap Kit (50 pack)	KFAET0150ETK	All
10.	Door Gasket Kit **	344994-751	All
11.	Accessory Quick Connect Kit	KFAPS0110KIT	All

* Factory authorized and listed, field-installed.
** This kit is for replacement of factory installed gaskets if they are damaged or removed from the fan coil.
† KFAHD0101SLP must also be purchased for down flow applications.
‡ KFAHD0101SLP must also be purchased for down flow or horizontal applications.

Accessory Kits Description – Suggested and Required Use

1. **Disconnect Kit**
   The kit is used to disconnect electrical power to the fan coil so service or maintenance may be performed safely.

   SUGGESTED USE: Units for 3- through 10-kW electric resistance heaters and cooling controls.

2. **Downflow Base Kit**
   This kit is designed to provide a 1-in. (25mm) minimum clearance between unit discharge plenum, ductwork, and combustible materials. It also provides a gap-free seal with the floor.

   REQUIRED USE: This kit must be used whenever fan coils are used in downflow applications.

3. **Downflow Conversion Kit**
   Fan coils are shipped from the factory for upflow or horizontal-left applications. Downflow conversion kits provide proper condensate water drainage and support for the coil when used in downflow applications. Separate kits are available for slope coils and A-coils.

   REQUIRED USE: This kit must be used whenever fan coils are used in downflow applications.

4. **Downflow/Horizontal Conversion Gasket Kit**
   This kit provides the proper gasketing of units when applied in either a downflow or horizontal application.

   REQUIRED USE: Fan coils in either downflow or horizontal applications.

5. **Horizontal Applications - Water Management Kit**
   This kit provides proper installation of fan coils under conditions of high static pressure and high relative humidity.

   SUGGESTED USE: All fan coils.

6. **Single Point Wiring Kit**
   The single point wiring kit acts as a jumper between L1 and L3 lugs, and between the L2 and L4 lugs. This allows the installer to run two heavy-gauge, high-voltage wires into the fan coil rather than 4 light-gauge, high-voltage wires.

   SUGGESTED USE: Fan coils with 15- and 20-kW fused heaters only.

7. **Filter Kit (12 pack)**
   The kit consists of 12 fan coil framed filters. These filters collect large dust particles from the return air entering the fan coil and prevents them from collecting on the coil. This process helps to keep the coil clean, which increases heat transfer and, in turn, the efficiency of the system.

   SUGGESTED USE: To replace filters in fan coils.

   REQUIRED USE: All units unless a filter grille is used.

8. **Fan Coil Filter Cabinet**
   This cabinet is mounted to the fan coil on the return air end and designed to slip over the outer fan coil casing. The cabinets are insulated using the same insulation as production fan coils. They are designed for the removal of particulates from indoor air using FILXXFNC00 (17, 21, 24) media filter cartridges. These fan coil media filter cartridge kits are designed for the removal of particles from indoor air. The cartridge is installed in the return air duct next to the air handler or further upstream.

   SUGGESTED USE: All fan coils.

9. **PVC Condensate Drain Trap Kit**
   This kit consists of 50 PVC condensate traps. Each trap is pre-formed and ready for field installation. This deep trap helps the system make and hold proper condensate flow even during blower initiation.

   SUGGESTED USE: All fan coils.

10. **Door Gasket Kit**
    This kit consists of specific adhesive-backed foam strips which are applied to the unit door and frame, limiting air leakage.

11. **Accessory Quick Connect Kit**
    This kit enables the installer to easily connect a 230V IAQ accessory (air purifier, electronic air cleaner, UV light, etc.) kit to a fan coil unit, eliminating the need to run a separate power supply to the accessory. Use of this kit may eliminate the requirement for a licensed electrician to complete the job (check local codes).

© 2024 Carrier. All rights reserved.

Manufacturer reserves the right to change, at any time, specifications and designs without notice and without obligations.