FOR SIGN ASSEMBLIES WITH MAXIMUM 8.75 SQUARE FOOT PANEL AREA

FOR SIGN ASSEMBLIES WITH GREATER THAN 8.75 SQUARE FOOT PANEL AREA WITH SUPPLEMENTAL SIGN

Typical Details

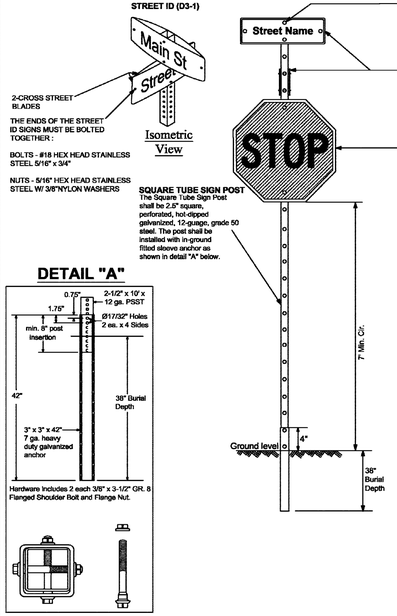

STREET ID (D3-1) MATERIALS:

LETTERS
WHITE TYPE XI SHEETING
LETTERING OF STREET NAME SIGNS SHALL BE COMPOSED OF A COMBINATION OF LOWERCASE LETTERS WITH INITIAL UPPERCASE LETTERS

BORDER
BORDER WIDTHS WILL VARY BASED ON LETTER HEIGHTS

LETTER HEIGHTS - BORDER WIDTHS
4 INCH LETTER = 0.375 INCH BORDER WIDTH
6 INCH LETTER = 0.500 INCH BORDER WIDTH
8 INCH LETTER = 0.750 INCH BORDER WIDTH

GREEN BACKGROUND
GREEN TRANSLUCENT INK SILK-SCREENED CLEAR-COATED OR ELECTRO-CUT (EC) FILM OR EQUIVALENT

LETTER SIZES
SEE MUTCD TABLE 2D-2 (PG 183) FOR MINIMUM LETTER HEIGHTS
LENGTH VARIES BY STREET NAME

HARDWARE
BOLTS - #18 HEX HEAD STAINLESS STEEL 5/16" x 3"
NUTS - 5/16" STAINLESS STEEL W/ NYLON WASHERS.

REGULATORY SIGN
WHEN NO STREET ID IS PRESENT
THE STOP SIGN SHALL BE MOUNTED FLUSH TO THE TOP OF THE POST WHILE MAINTAINING 7 FEET MIN. CLEARANCE BETWEEN BOTTOM OF SIGN AND GROUND LEVEL. ANY SIGN INSTALLED BACK TO BACK WITH THE STOP SIGN SHALL BE SMALLER THAN THE STOP SIGN.

STOP, DO NOT ENTER OR YIELD
WHITE TYPE XI SHEETING
PRESSURE-SENSITIVE RED TRANSLUCENT INK SILK-SCREENED CLEAR-COATED OR ELECTRO-CUT (EC) FILM OR EQUIVALENT.

HARDWARE
FRONT: #18 HEX HEAD STAINLESS STEEL 5/16" x 3" BOLT W/ 3/8" NYLON WASHER
BACK: 5/16" HEX HEAD STAINLESS STEEL NUT W/ 3/8" STAINLESS STEEL WASHER.

NOTES:
1. ALL TYPE XI SHEETING UTILIZED MUST BE ON THE FDOT APL LIST.
2. SEE BCTED TECHNICAL POLICY MEMO #TPM - 16-001 - SPECIFICATIONS FOR RETROFLECTIVE TRAFFIC SIGN MATERIALS.

Typical Details

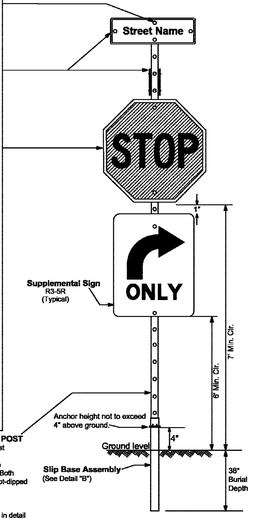

DETAIL "B"

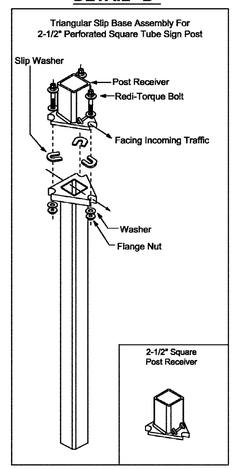

Notes:
1. Dimensions and certain details for the parts used to assemble the slip base connections are intentionally not shown. Slip base connections are patented manufactured products that are in compliance with NCHRP 350 crash test criteria. The base connection details are only shown on this plan to illustrate how the parts are assembled. The complete assembly must be designed to withstand 150 mph Base Wind Speed per 2013 AASHTO Standard Specifications for Structural Supports for Highway Signs, Luminaires, and Traffic Signals, 6th edition and interims.

2. For standard ground sign installation, see detail entitled " Ground Sign Assembly Details".

REVISIONS	
DATE	DESCRIPTION
04-09-2019	UPDATED MATERIAL NOTES
02-28-2020	ADDED ISOMETRIC VIEW
02-05-2021	UPDATED POST BASE HEIGHT

BROWARD COUNTY FLORIDA

PUBLIC WORKS DEPARTMENT
TRAFFIC ENGINEERING DIVISION

DESIGN BY: CARMELO CARATOZZOLO, P.E. | SCALE: NTS
DRAWN BY: STEPHON RAMOUTAR
CHECKED BY: ANDREW SEBO, P.E., PTOE

STOP SIGN AND STREET IDENTIFICATION ASSEMBLY TYPICAL DETAILS

SHEET NO. 1 OF 1

GUIDE TO USE THIS STANDARD:
1. Calculate the Total Panel Area and the centroid 'C' for an individual sign or a sign cluster.
2. Determine the height 'H' from the groundline for the individual sign or the cluster.
3. Consult the Post Size Table and find the intersection point.
4. Design the post and the foundation according to the required Post Size and Assembly Details.

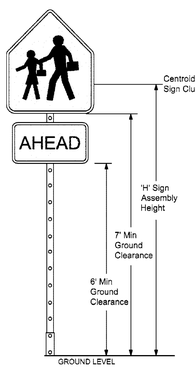

Post Size Table

Total Panel Area (sf)	'H' Sign Assembly Height (ft) (measure from ground) 8	8.5	9	9.5	10
3					
4					
5					
6	Sign Post with 3" x 7 ga. Square Anchor				
7					
8					
9					
10					
11					
12					
13	Sign Post with Triangular Slip Base Assembly				
14					
15					
16					
17					
18	Two Post Installation Required with Triangular Slip Base				
19					
20+					

*REGARDLESS OF POST SIZE TABLE, IF A SIGN PANEL IS EQUAL TO OR GREATER THAN 4 FEET IN WIDTH, A TWO POST INSTALLATION IS REQUIRED WITH A TRIANGULAR SLIP BASE.

Sign Post with 3" x 7 ga. Square Anchor

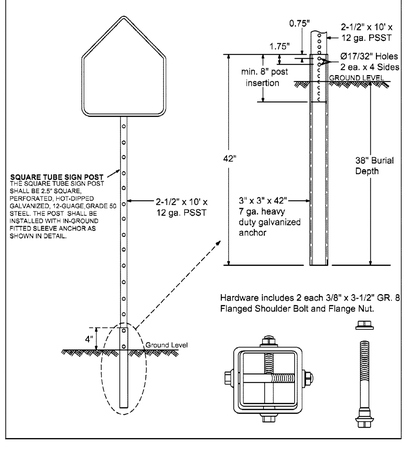

Sign Post with Triangular Slip Base

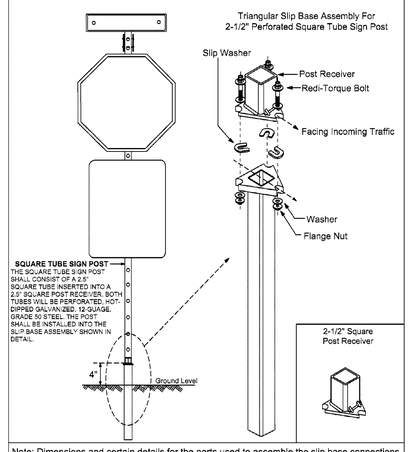

Note: Dimensions and certain details for the parts used to assemble the slip base connections are intentionally not shown. Slip base connections are patented manufactured products that are in compliance with NCHRP 350 crash test criteria. The base connection details are only shown on this plan to illustrate how the parts are assembled. The complete assembly must be designed to withstand 150 mph Base Wind Speed per 2013 AASHTO Standard Specifications for Structural Supports for Highway Signs, Luminaires, and Traffic Signals, 6th edition and interims.

REVISIONS	
DATE	DESCRIPTION
03-21-2017	UPDATED POST SIZE
11-24-2020	ADDED POST SIZE NOTE
02-05-2021	UPDATED POST BASE HEIGHT

BROWARD COUNTY FLORIDA

PUBLIC WORKS DEPARTMENT
TRAFFIC ENGINEERING DIVISION

DESIGN BY: YVES D'ANJOU, P.E. | SCALE: NTS
DRAWN BY: STEPHON RAMOUTAR
CHECKED BY: ANDREW SEBO, P.E., PTOE

GROUND SIGN ASSEMBLY DETAILS

SHEET NO. 1 OF 1

PAVEMENT MARKING AND SIGNING NOTES

1. THERMOPLASTIC SHALL CONFORM TO THE REQUIREMENTS OF THE FLORIDA DEPARTMENT OF TRANSPORTATION STANDARD SPECIFICATIONS FOR ROAD AND BRIDGE CONSTRUCTION, SEE SECTION 711-MINIMUM THICKNESS 90 MILS (ALKYD ONLY).
2. ALL SIGNS & MARKINGS SHALL CONFORM TO THE REQUIREMENTS OF THE MANUAL ON UNIFORM TRAFFIC CONTROL DEVISED FOR STREETS AND HIGHWAYS, FDOT ROADWAY AND TRAFFIC DESIGN STANDARDS, AND BROWARD COUNTY TRAFFIC ENGINEERING DIVISION STANDARDS.
3. THERMOPLASTIC SHALL BE USED UNLESS OTHERWISE APPROVED BY BROWARD COUNTY TRAFFIC ENGINEERING DIVISION AND THE CITY ENGINEER. ALL PAVEMENT MARKINGS SHALL BE THERMOPLASTIC EXCEPT PARKING SPACE MARKINGS WHICH SHALL BE PAINT.
4. THESE INSTALLATIONS SHALL BE IN ACCORDANCE WITH THE FLORIDA DEPARTMENT OF TRANSPORTATION STANDARD SPECIFICATIONS FOR ROAD AND BRIDGE CONSTRUCTION LATEST EDITION. HOWEVER, WHERE CONFLICTS EXIST, THIS TYPICALLY SHALL TAKE PRECEDENT OVER FDOT STANDARD SPECIFICATIONS.
5. ONE BLUE / BLUE REFLECTIVE PAVEMENT MARKER SHALL BE PLACED IN THE MIDDLE OF THE TRAFFIC LANE NEAREST TO AND DIRECTLY IN FRONT OF THE FIRE HYDRANT.
6. ALL R1-1 STOP SIGNS SHALL BE 30" x 30" AND ALL R1-1, R2-1, R5-1 AND D-3's SHALL BE DIAMOND GRADE, TYPE X1 SHEETING.
7. ALL HANDICAP SPACES, RAMPS, AND ACCESS AREAS SHALL COMPLY IN STRICT ACCORDANCE WITH THE "2012 FLORIDA ACCESSIBILTY CODE FOR BUILDING CONSTRUCTION" AND THE "2010 ADA STANDARDS FOR ACCESSIBLE DESIGN". ANY DISCREPANCY IN THE CODE OR ON THE PLAN SHALL BE CALLED TO THE ENGINEERS ATTENTION PRIOR TO CONSTRUCTION.
8. PAVEMENT MARKINGS LOCATED IN BRICK PAVERS SHALL BE THE APPROPRIATE COLOR AND HIGH INTENSITY REFLECTORIZED BRICK PAVERS PER FDOT STANDARDS. COLORED BRICK PAVERS IN PARKING SPACES DO NOT NEED TO BE REFLECTORIZED.
9. ALL SIGNS REQUIRE A SEPARATE BUILDING PERMIT.
10. PARKING SPACES ARE NOT REQUIRED TO BE REFLECTORIZED.
11. ALL REFLECTIVE PAVEMENT MARKERS SHALL BE INSTALLED PER BROWARD COUNTY TRAFFIC ENGINEERING STANDARDS, SHALL BE CLASS "B", AND APPROVED BY BROWARD COUNTY TRAFFIC ENGINEERING AND THE CITY ENGINEER BEFORE INSTALLATION.
12. ALL PAVEMENT MARKINGS AND SIGNAGE SHALL CONFORM TO BROWARD COUNTY TRAFFIC ENGINEERING STANDARDS (LATEST EDITION).
13. ALL TRAFFIC CONTROL DEVICES MAINTAINED BY BROWARD COUNTY, THAT ARE REMOVED OR DAMAGED BY CONSTRUCTION, SHALL BE REPLACED BY CONTRACTOR USING CURRENT BROWARD COUNTY TRAFFIC ENGINEERING DIVISION STANDARDS.
14. CONFLICTING EXISTING PAVEMENT MARKINGS SHALL BE REMOVED BY WATER BLASTING OR SAND BLASTING.

Jeffrey T. Schnars, Professional Engineer, State of Florida, License No. 46697.
This item has been digitally signed and sealed by Jeffrey T. Schnars, P.E. on 10/11/2023.
Printed copies of this document are not considered signed and sealed and the signature must be verified on any electronic copies.

SCHNARS ENGINEERING CORPORATION
TEL: (561) 241-6455
FAX: (561) 241-5182
947 CLINT MOORE ROAD
BOCA RATON, FLORIDA 33487
CERTIFICATE OF AUTHORIZATION No. 6640

ORIGINAL: OCT. 2022
REVISIONS:
1 1/3/23 CITY COMMENTS
2 10/11/23 CITY COMMENTS
3
4
5

TASK: CONSTRUCTION DETAILS

PROJECT: NOVE OF MARGATE
MARGATE FLORIDA

SEAL

Jeffrey T. Schnars, P.E.
Civil Engineer
Florida Registration No. 46697
(FOR THE FIRM)

JOB NO. 17180
DRAWN RAD
DESIGNED JTS
CHECKED JWM
Q.C. JTS

SHEET C9 OF 11

10/11/2023 9:05:07 AM