City of Margate
DEVELOPMENT REVIEW COMMITTEE
Application for Special Exception (new construction)

5790 Margate Blvd., Margate, FL 33063
954-972-6454

Submittal Date (official use): 11-03-14 A11:20 RCVD

Project Name	BB&T Branch Bank - Coconut Creek
Address	5700 Coconut Creek Parkway
Acreage	0.866 Ac
Folio Number	4842 30 35 0010
Existing Use	Commercial (Previously Gas Station)
Legal Description	Parcel A, Farris Margate Corner Plat according to Plat Thereof as recorded in Plat Book 178, Pages 171 and 172 of the Public records of Broward County, Florida

DRC # 11-14-03

Paid: $2,320.00

Describe proposal/request in detail, including non-residential square footage and/or number of dwelling units

- ☐ Proposed single story 3,200 SF Branch Bank with drive thru (2 teller and 1 ATM drive up lanes)
- ☐
- ☐

Agent/Contact Name	H & T Consultants, Inc. c/o Lee Thompson
Address	9310 Old Kings Road South, suite 1001 Jacksonville, Florida 32257
Phone Number	904-419-1001
Fax Number	904-419-1005
Email Address	handtcon@bellsouth.net

Property Owner Names	James G. Farris and Shirley J. Farris
Address	124 NE 3rd Street Pompano Beach, Florida 33060
Phone Number	954-943-2945
Fax Number	
Email Address	

OWNER'S AFFIDAVIT: I certify that I am the owner of record for the above referenced property and give authorization to file this petition. I understand that I, or a representative on my behalf, must be present at the DRC meeting. I further understand that my petition will be subject to the regulations of Chapter 16 ½ of the Margate City Code.

James G. Farris — Property Owner's Signature — Date 11/3/14

Shirley J. Farris — Property Owner's Signature — Date 11/3/14

City of Margate
*** CUSTOMER RECEIPT ***

Batch ID: AMORALES 11/05/14 00 Receipt no: 18828

Type	SvcCd	Description	Amount
EI	ECDV	SPECIAL EXECPT. USE	
	Qty	1.00	$2320.00

H T CONSULTANTS, INC
9310 OLD KINGS RD S
STE 1001
JACKSONVILLE, FL 32257-6196
RE: BB&T BRANCH BANK PROPOSAL
5700 COCONUT CREEK PKWY

Tender detail

CK Ref#:	7531	$2320.00
Total tendered:		$2320.00
Total payment:		$2320.00

Trans date: 11/06/14 Time: 11:03:27

HAVE A GREAT DAY!

Wastewater Pumping Station
and Forcemain Design Calculations

for

BB&T
5700 Coconut Creek Parkway
City of Margate, Florida

1. **Average Daily Flow(ADF):**

   Flows will be generated by a 3,200 SF Bank facility.

   Per building square foot and flow per 1,000SF; bank 120 GPD / 1,000SF

   Bank: Therefore: 3 SF / 1,000 * 120 GPD = **384 GPD**

   Estimated Flow 384 GPD for ADF.

2. **Maximum Daily Flow(Max. Day):**

   Assume Max. Day = ADF * 2.25; if ADF = 384 GPD, then Max. Day
   = **384** GPD * 2.25 = 864 GPD

   Therefore, Max. Day = 864 GPD

3. **Peak Hour Flow(Peak):**

   Calculate peak based on 24 hours/day operations.
   Assume Peak = Max. Day / # ~ hours operating/day * peaking factor
   Peak = 864 GPD/12 Hours/Day* 4

   Peak = 288 Gallons/Hour or 3.8 Gallons/Minute (use 15 GPM)

4. **Calculate Equivalent Lengths of Forcemain**

   a. **2" PVC Forcemain**

Description	**Equivalent Length**
35.5 LF ~ 2" (SDR 21) PVC Forcemain	35.5'
1 – 2" 90 Degree Bends @ 6' ea.	6'
1 – 2" Gate Valve @ 2' ea.	2'
1- Tee Flow Run Outlet @ 4.5' ea.	4.5'
1 – 2" Check Valve @ 12' ea.	12'
1 – 2" Corp Stop @ 12' ea.	12'
Total Equivalent Length 2" Forcemain	**60'**

5. **Static Head**

   Static Head = High point in Water Column – Bottom of Wetwell

STANLEY G. HILL
LICENSE
No. 51207
STATE OF
FLORIDA
PROFESSIONAL ENGINEER

High Point in Water Column = 10.25' (Grade at Wetwell – 3' of Cover)
Lowest point in system = 5.0
Therefore, Static Head = 10.25 – 5.25 = 5.0'
Static Head = 5.0'

6. Manifold Head Condition

System will discharge into a proposed receiving 12" sanitary Force main.

- Minimum pressure = 15psi = 34.6' (MH)
- Maximum pressure = 27 psi = 62.3' (MH)

7. System Operating Curve

Pumping Rate	Friction Loss Equation	Loss(Fs)
20 GPM	(60' * 1.82'/100' * 0.54) =	0.59'
25 GPM	(60' * 2.73'/100' * 0.54) =	0.88'
30 GPM	(60' * 3.84'/100' * 0.54) =	6.43'
35 GPM	(60' * 5.10'/100' * 0.54) =	8.55'
40 GPM	(60' * 6.60'/100' * 0.54) =	11.06'
45 GPM	(60' * 8.20'/100' * 0.54) =	13.74'
50 GPM	(60' * 9.90'/100' * 0.54) =	16.59'

Operating Under Minimum Conditions

Pumping Rate	Friction Losses	Static Head	MH	TDH
20 GPM	0.59'	5.00'	34.60'	40.19'
25 GPM	0.88'	5.00'	34.60'	40.48'
30 GPM	1.24'	5.00'	34.60'	40.79'
35 GPM	1.65'	5.00'	34.60'	41.25'
40 GPM	2.13'	5.00'	34.60'	41.73'
45 GPM	2.65'	5.00'	34.60'	42.25'
50 GPM	3.20'	5.00'	34.60'	43.80'

Operating Under Maximum Conditions

Pumping Rate	Friction Losses	Static Head	MH	TDH
20 GPM	0.59'	5.00'	62.50'	68.09'
25 GPM	0.88'	5.00'	62.50'	68.38'
30 GPM	1.24'	5.00'	62.50'	68.74'
35 GPM	1.65'	5.00'	62.50'	69.15'
40 GPM	2.13'	5.00'	62.50'	69.63'
45 GPM	2.65'	5.00'	62.50'	69.86'
50 GPM	3.20'	5.00'	62.50'	70.70'

8. Set Pump Control Elevations in Wetwell

Desire Pumps to Run every 15 minutes during peak hour. Influent Volume = 15 minutes * 15 GPM = **225 Gallons** 225Gallons/7.48Gallons/cubic foot = **30.1 Cubic Feet;** Determine height above pumps off level to achieve 30.1 cubic feet of water in wetwell; V = 3.1416(r^2) * depth; therefore, 10 cubic feet = 3.1416(6/2 ^2) * depth
Therefore Depth = 1.10; Set Pumps Off Level @ 6.20; Lead Pump On @ 7.30; Lag Pump On @ 7.80 and Alarm On @ 8.30

9. Check Pump Run Time

See Pump Performance Curve vs. Systems Operating Curve and Note that Conditions of Service are approximately:
Max conditions: 15 GPM @ 67' of Total Dynamic Head.
Min conditions: 56 GPM @ 43' of Total Dynamic Head.

Therefore, (Max) Pumps Run Time = 225 Gallons/15 Gallons/Minute = 15 minutes, O.K. Run Time
(Min) Pumps Run Time = 225 Gallons/56 Gallons/Minute = 4 minutes, O.K. Run Time

See pump system curve attached

10. Flow Rate must be a minimum of 2.0 FPS.

Design Point: Flow Rate = 0.408 x 20GPM/2"^2 = 2.04 FPS provided. (meets minimum of 2.0 FPS flow rate) OK

Operating Point: Flow Rate = 0.408 x 45GPM/2"^2 = 4.59 FPS provided. (meets minimum of 2.0 FPS flow rate) OK

Based off Average tie on system pressure. See pump system curve attached

11. Displacement/Ballast Calculations

Use Seasonal High Water level 1' below existing grade (conservative).
Fiberglass wet well with 12" thick base slab with 12" extensions

Displacement of Wetwell = 12.25 – 5.25 = 7.0' * 3.1416 *3^2 * 62.4 = 12,350 lbs displacement
Displacement of Conc. Slab = 3.1416 *(4)^2 * 1.0' Tk. * 62.4 = 3,136lbs. Displacement
Total Displacement = 15,486 lbs

Check Weight of Concrete wetwell, base Slab and soil over extensions:

Base Slab Weight = 3.1416 (4)^2 * 1.0' * 150 lbs/cubic foot = 7,540 lbs
Soil over 12" extension = (3.1416 (4) ^2 - 3.1416(3)^2) * 7 * 62.4lbs/cubic foot = 9,605 lbs

Total Weight = 17,145 lbs of ballast

Therefore, 17,145 lbs of ballast is greater than 12,350 lbs ~ displacement so O.K.

Performance Curve

GRP16/3

HOMA PUMP TECHNOLOGY

Impeller					
Impeller type: **vane impeller with cutter sys.**	Solid size Ø:	Max. Ø: **6⅞"**	Min. Ø: **3¾"**	Sel. Ø: **4⅞"**	

Operating data				
Speed: **3450 rpm**	Frequency: **60 Hz**			Discharge port: **2" M**
Power data referred to:	Water [100%] ; 68°F; 62,322lb/ft³; 1,0818E-5ft²/s		Testnorm:	**ISO 9906**

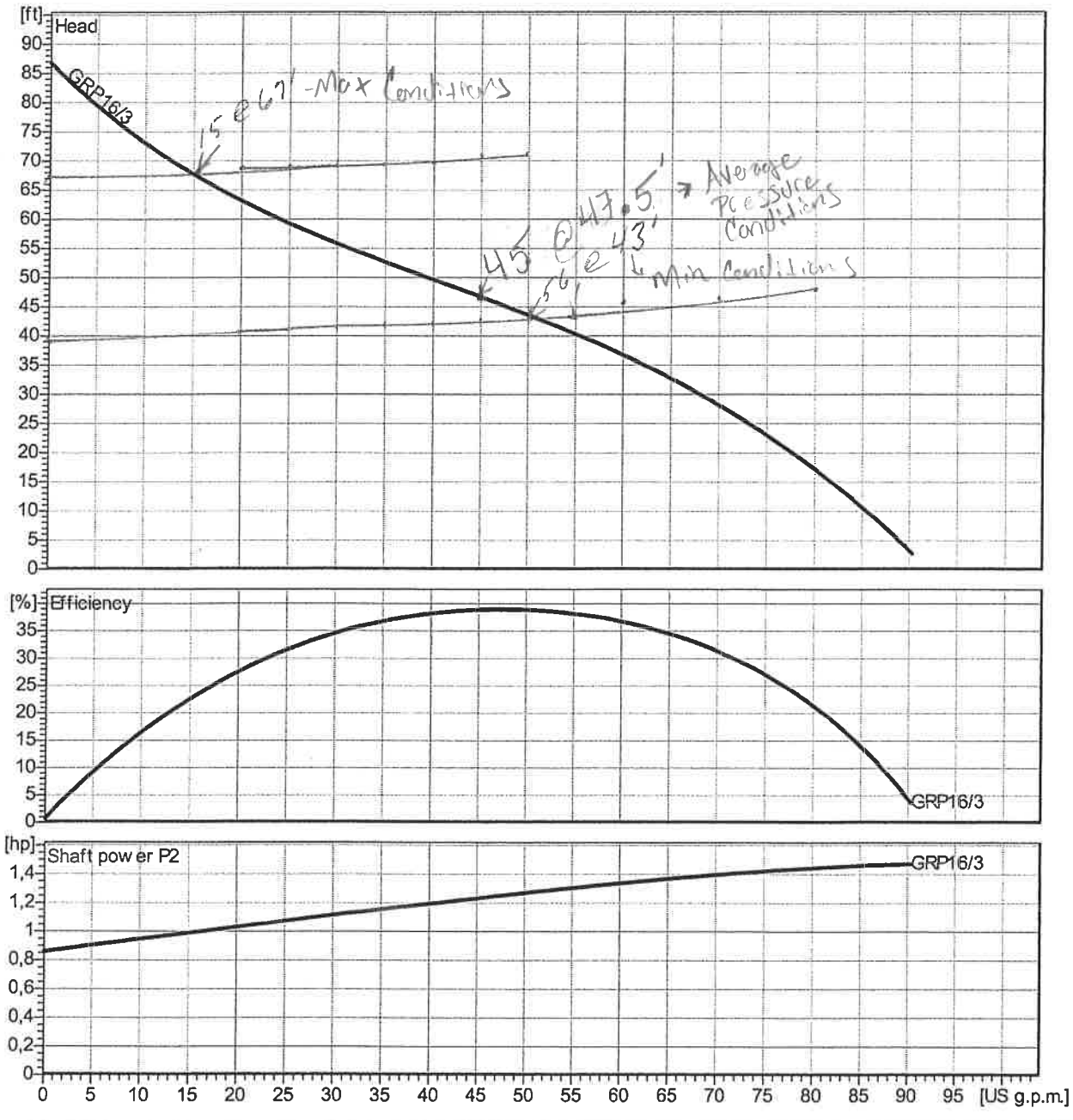

Project	Project no.:	Created by:	Page:	Date: **2007-10-05**

HOMA™

PUMP TECHNOLOGY

Submersible GRP Series Grinder Pumps

High Performance in

HOMA began as a submersible motor manufacturer more than fifty years ago. We expanded into full pump production in the 1960s. Every product we design and manufacture has always exceeded the current standard of excellence. Held in highest regard throughout the industry, HOMA submersible pumps, grinders, mixers, aerators, disposal units, pump stations, and control panels have consistently set new benchmarks for reliability, reduced power consumption, extended service life, and lowest overall cost of ownership.

If consistently high performance and uninterrupted cost-effective operation are your top priorities, HOMA is – without question – the company for you. Our knowledgeable professionals will be with you every step of the way, whether you're a homeowner, a seasoned contractor, or an engineer representing a municipality.

New construction or retrofit, residential, commercial, or light industrial – every situation is unique and presents its own set of challenges. We'll work closely with you to address them all and guide you to the right solution, and will not stop at simply meeting the basic needs and staying within the budget. In addition, we will overcome existing property limitations and ensure full compliance to local regulations. HOMA's complete grinder pump

HOMA Pump, Ansonia Connecticut

You won't see it, but HOMA's fully submersible grinder pump impeller design, with its exclusive hardened stainless steel, dual-action cutter system, cuts up waste material far more efficiently than single acting cutter or shredder systems.

HOMA Grinder Pump Cutter System

The goal of a grinder pump is to process solids, making them small enough to pass through the pump and discharge line without plugging.

While most grinder pumps effectively compress the solids as they pass through the pump, permitting compressed stringy solids to reside in the pump when the unit is turned off, the HOMA grinder takes a different approach. Solids are processed with a dual-action cutter operating outside of

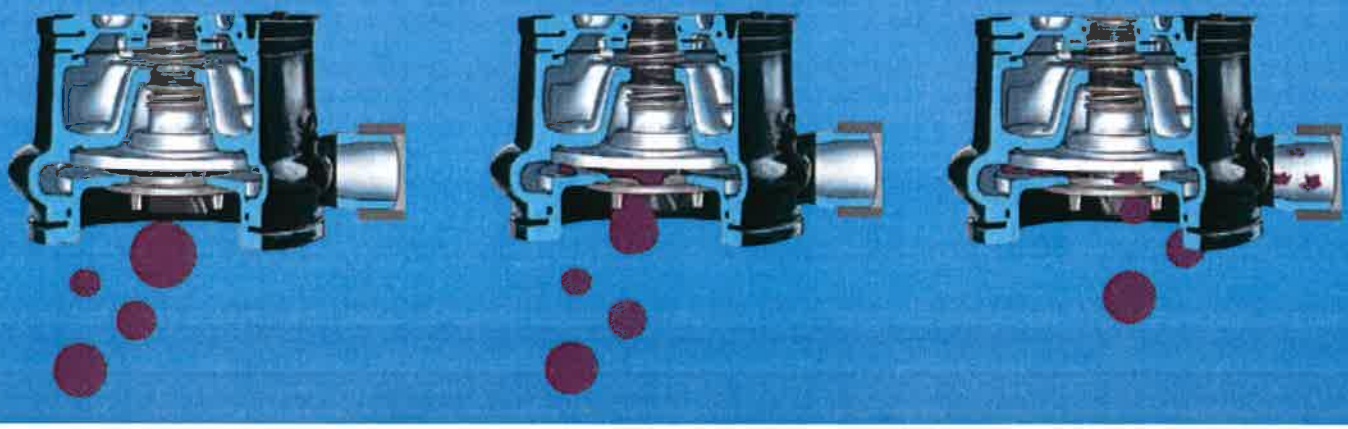

Wastewater Pumping

solutions are available either fully assembled or as sub-systems designed specifically for simple, "no surprises" assembly on site. Pre-assembled packages include the fully submersible grinder pump, basin and cover, level controls, internal piping, valves, and control panel. Typically, minimal site preparation is needed, since we build our systems to be up and running fast.

Once installed, HOMA systems are not just out of sight, but out of mind.

When it comes to environmentally sound wastewater and sewage disposal solutions that will work reliably and last for years to come, HOMA is the company you can stake that future on.

HOMA Pumpenfabrik GmbH

Test Facility, HOMA Pumpenfabrik GmbH

the pump, below the impeller. The unique hardened cutter system is manufactured in stainless steel alloyed with cobalt, vanadium, and molybdenum. Both stationary and rotational cutters are hardened to a minimum of 55 Rockwell C, guaranteeing a long and trouble free service life.

Each cutter assembly is fitted with two upper and two lower cutter blades. The motor operating at 3,450 RPM provides 6,900 cuts per minute for the lower cutters. An additional 6,900 cuts per minute for the upper cutters provide a secondary cutting action, resulting in a combined total of 13,800 cuts per minute.

When a HOMA grinder pump is turned off, any large solids yet to be fully processed fall away from the cutter mechanism. This allows the unit to start pumping relatively clear fluids.

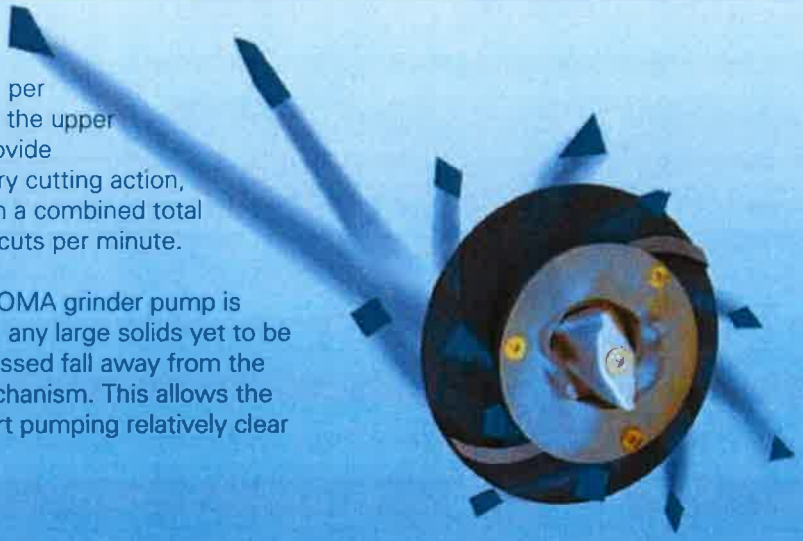

Small Motor

GRP 12 & 19

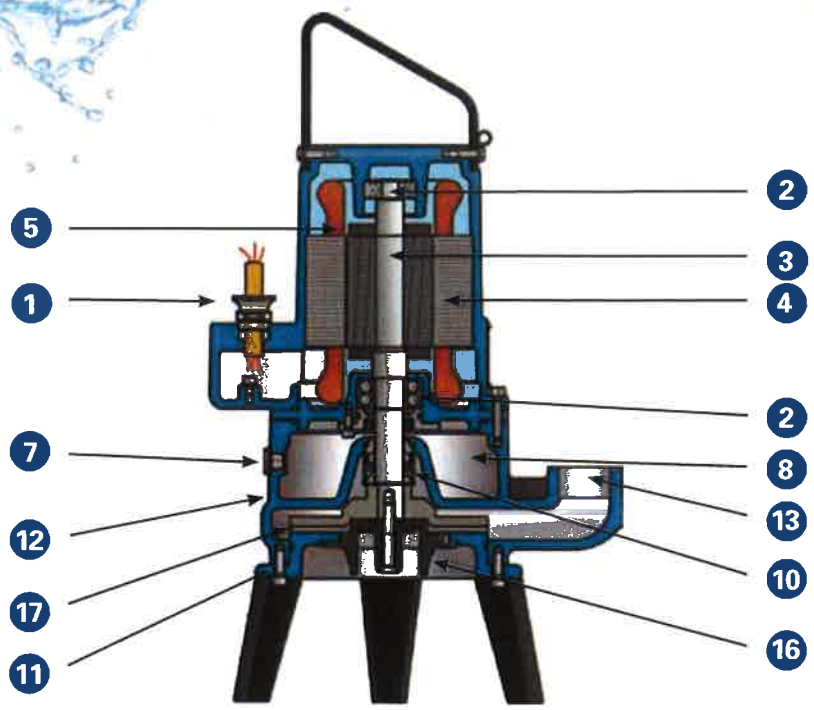

GRP 10,16, & 21

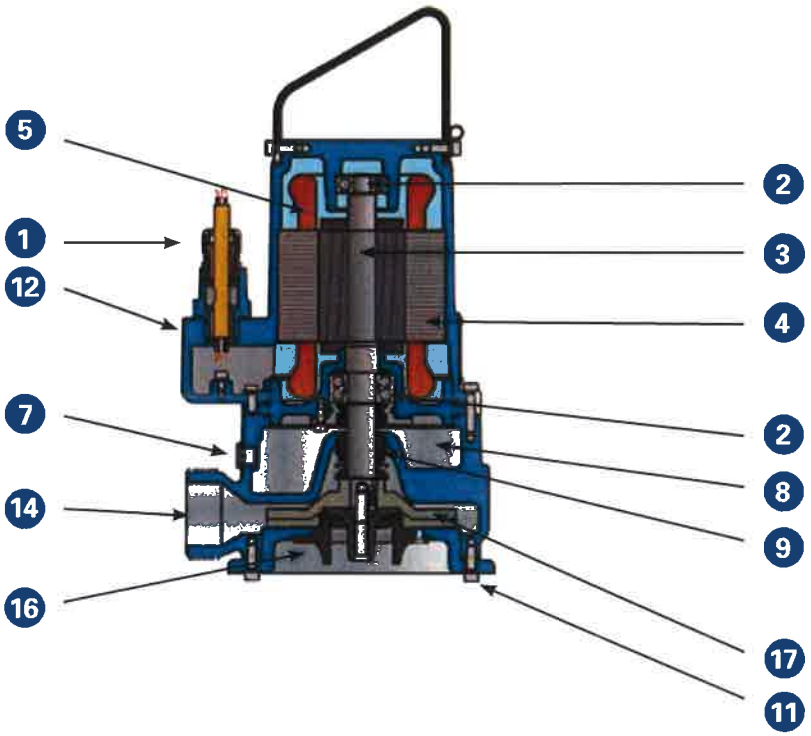

2 HP Range

1 **Cable Entry Gland**
Rugged bolt in design provides easy cable changes, positive watertight seal to 65' submergence, and protection against rough handling.

2 **Motor Bearings**
Premium grade, permanently lubricated with high temperature grease, and oversized for maximum B-10 rated life.

3 **Shaft**
One piece, dynamically balanced, 430F, stainless steel shaft with precision machined shoulders to positively support bearings and impeller. Short overhang, large diameter shaft ensures extremely low deflection and minimal vibration for superior seal and bearing life.

4 **Stator**
High-efficiency motor windings with Class F insulation and 1.15 service factor. Options include 1.20 Service Factor, Class H Insulation, IE3 Premium Efficiency, NEMA MG-1 Part 31 and Explosion-Proof motors for Class I, Division 1, Group C and D area classifications with FM or ATEX approvals.

5 **Motor Winding Protection**
Stator winding temperature continuously monitored by thermal switches embedded in each phase offer protection from high temperature upset conditions. Single-phase, non-explosion-proof motors 2 HP and less have automatically resetting internally wired thermal switches.

6 **Motor Cooling**
Jacket-cooled motor options are available for special applications. Consult the factory for more information.

7 **Moisture Monitors**
Oil chamber continuously monitored for water intrusion with standard seal probe.

8 **Oil Chamber**
Generously sized oil chamber provides positive lubrication and cooling of mechanical seals and lower bearings to assure long service life.

Large Motor

3 to 17 HP Range

9 Mechanical Seals
Two independent mechanical seals in tandem arrangement provided as standard with hard silicon carbide seal faces to provide superior abrasion and temperature resistance. Tungsten carbide seal faces and/or Viton elastomers are optional for special applications.

10 Mechanical Seal/Lip Seal
Combination of lower mechanical seal and upper lip seal provided on 2 HP and smaller motors. Lower mechanical seal is provided with hard silicon carbide seal faces to provide superior abrasion and temperature resistance.

11 Hardware
All exposed fasteners are 304 stainless steel for ease of disassembly after years of service. 316 stainless steel available upon request.

12 Housing
All major castings are ASTM A48 Class 40 cast iron, epoxy-coated against corrosion, and sealed with fully captured O-rings.

13 Volute
Centerline discharge pump housing provided with 1¼" NPT vertical discharge for flexible hard-piped installations or with auto-coupled lift-out system.

14 Volute
Centerline discharge pump housing provided with 2" M horizontal discharge available in threaded or flanged connections for various hard piped installations or with auto-coupled lift-out system.

15 Volute
Centerline discharge pump housing provided with 2"ANSI B16.1/Class 125 dimensioned horizontal discharge flange for hard-piped installations or with auto-coupled lift-out system.

16 Cutter System
Stationary cutter ring and blade rotor manufactured in stainless steel alloyed with cobalt, vanadium, and molybdenum for a hardness of 55 Rockwell C, minimum.

17 Open Multi-Channel Impellers
High-efficiency multi-vane impeller assures smooth, reliable service.

GRP 24 – 50

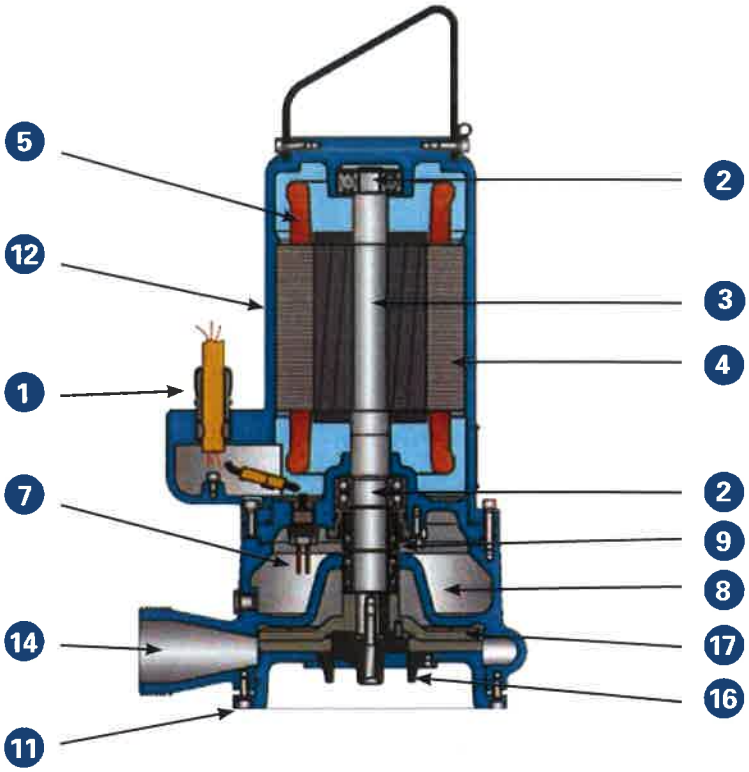

GRP 59, 79, & 118

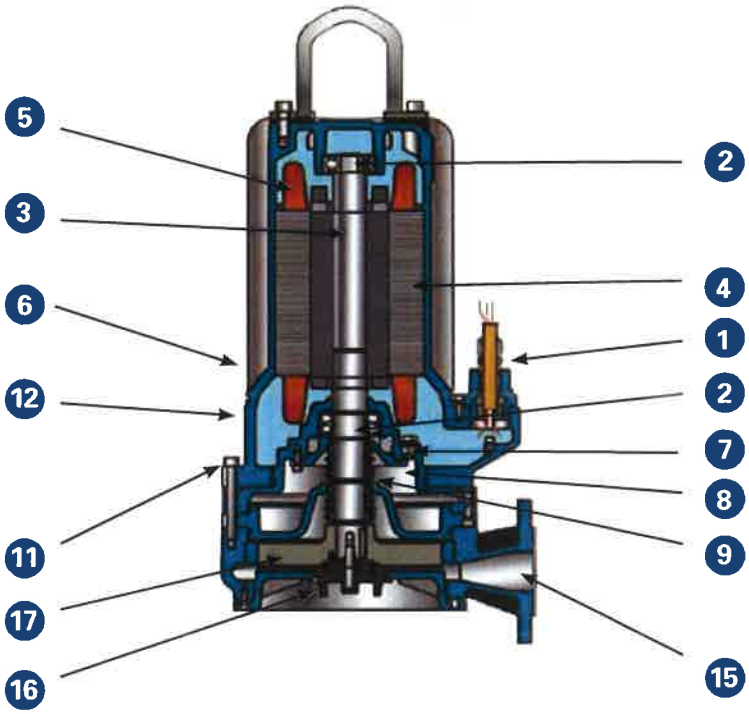

Hydraulic Ranges

GRP 12 & 19

2 HP 1¼" vertical discharge grinder designed for light commercial and residential applications. Includes integral mounting stand for easy installation or retrofit of most hard-piped installations or can be supplied with an auto-coupling lift-out system with or without an integral check valve. High-pressure performance guarantees trouble-free operation

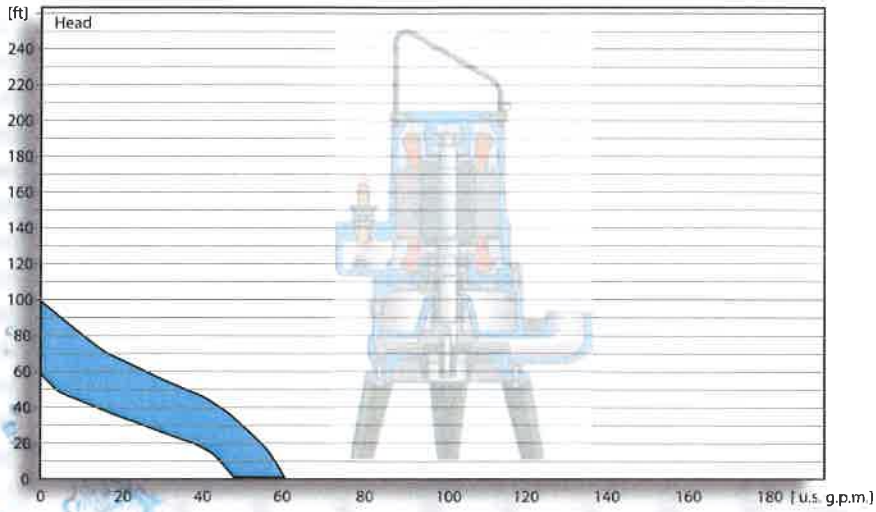

GRP 10 – 50

2 HP – 7 HP 2" horizontal discharge grinder designed for heavy commercial and municipal applications. Single-phase and three-phase provides installation flexibility. Available with optional mounting stand for hard-piped installations or an auto-coupling lift-out system. Wide range of hydraulic coverage provides everything from high pressure/low flow to low pressure/high flow, for optimal pump selection and a long, trouble-free life.

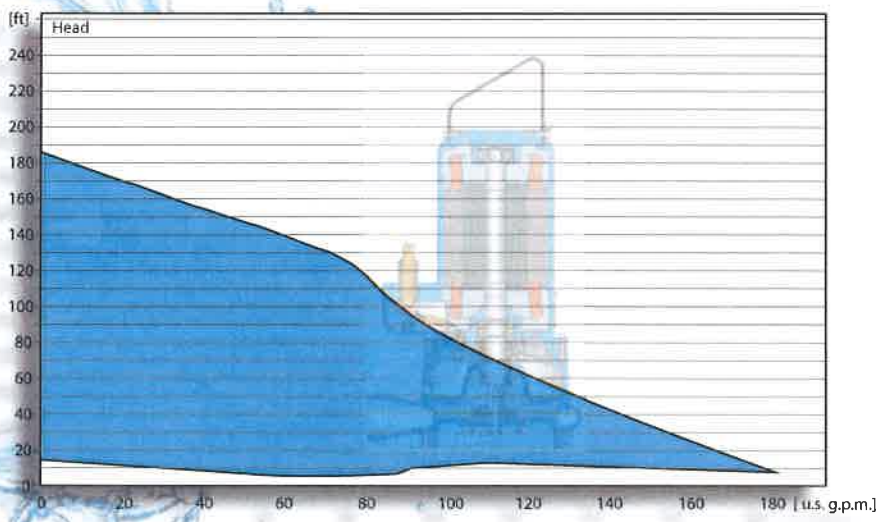

GRP 59, 79, & 118

7.5 HP – 17 HP 2" horizontal discharge designed for the most demanding commercial and municipal applications. Single-phase (to 10 HP) and three-phase provides installation flexibility. Available with optional mounting stand for hard-piped installations or an auto-coupling lift-out system. Hydraulic range covers the highest pressure pumping applications.

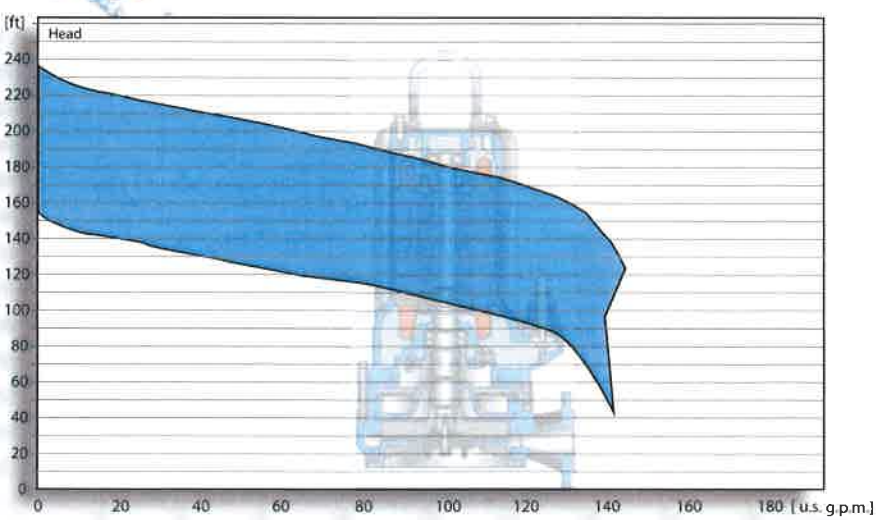

Installations

HOMA offers a variety of ring stand, auto-coupling systems, and competitor adapters to facilitate an easy and versatile installation. The ring stands are designed to position the pump at the proper clearance from the sump floor. Auto-couplings are available in cast iron or 316 stainless steel for corrosive applications and the 1¼" is available with integral check valve. Various adapters are also available to mount the HOMA grinders into existing stations utilizing competitor base elbows.

Ring Stand Hard-Piped Installations

Wet Pit with Auto-Coupling Installations

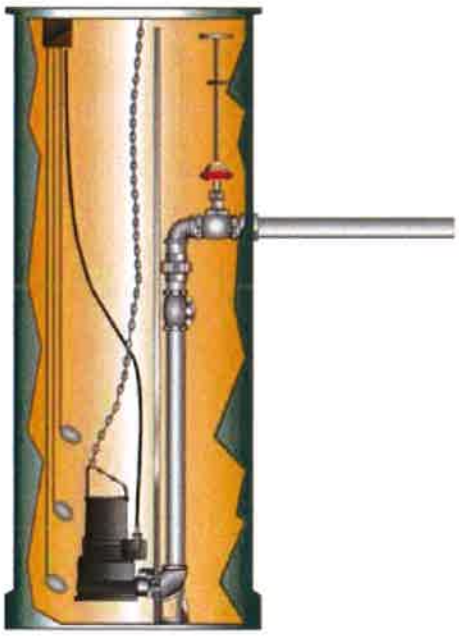

Wet Pit with Auto-Coupling Installations

The HOMA auto-coupling system uses two guide rails with either a thread-on or bolt-on guide claw to evenly guide the pump down to the base elbow. The two guide rails are spaced apart to provide stable alignment during the installation and removal process.

The guide claws are designed to utilize an inexpensive, easily replaceable resilient rubber seal, which assures a leak-free installation. This is easily replaceable when the pump is pulled for service.

The guide claws rest on a sturdy base elbow that, when anchored into the wet well floor, provides a large surface for the guide claw to mount. This allows the pump to be firmly mounted to avoid tipping, blow-by, or errant vibrations.

Pump sliding down

Pivoting action

Axial, full-face compression

HOMA Family of Pumps

CTP53M54
pump with 5 HP motor, 3"discharge, and 316SS construction installed on 316SS auto-coupling system.

AMX644-300/29P/C
pump with 29 HP motor, 6"discharge, and 4"solids handling single-vane impeller mounted on a 6"x 8" auto-coupling to allow for future upgrade to 8" pump.

AMX434-193/5.5T/C ASC
pump with 5.5 HP motor, 4"discharge, and cutter system mounted on a transportable ring stand system.

AMX444-210/10TU
pump with 10 HP motor, 4"solids handling single-vane impeller, and cooling jacket, vertically mounted on dry sump stand with clean-out port.

AK848-340/30GU
pump with 30 HP, 880 rpm, jacketed motor, 8"solids handling, multi vane impeller, and volute clean-out port vertically mounted.

AKX1266-430/125HU
pump with 125 HP, 1,180 rpm, jacketed motor, 6"solids handling, multi-vane impeller, and volute clean-out port horizontally mounted.

HOMA™
PUMP TECHNOLOGY

390 Birmingham Blvd.
Ansonia, Connecticut 06401
Voice: 203 736-8890
Fax: 203 736-8899
www.HOMAPump.com

DNV

FM APPROVED

PROJECT NARRATIVE

LOCATION & Description:

The project site is located on 5700 Coconut Creek, Margate Fl, (see location Map)
The drainage area is 0.87 acres, with 0.69 Ac of proposed impervious area. The project consists of constructing an approximate 3,200 SF Bank with drive-thrus.
Pre-treatment will be provided to the first 1.5 inch run-off of lot area.
Run-off will be directed to 315 L.F of exfilteration trench for water quality treatment. The control elevation for the site is 9.0

Typical Exfiltration Trench

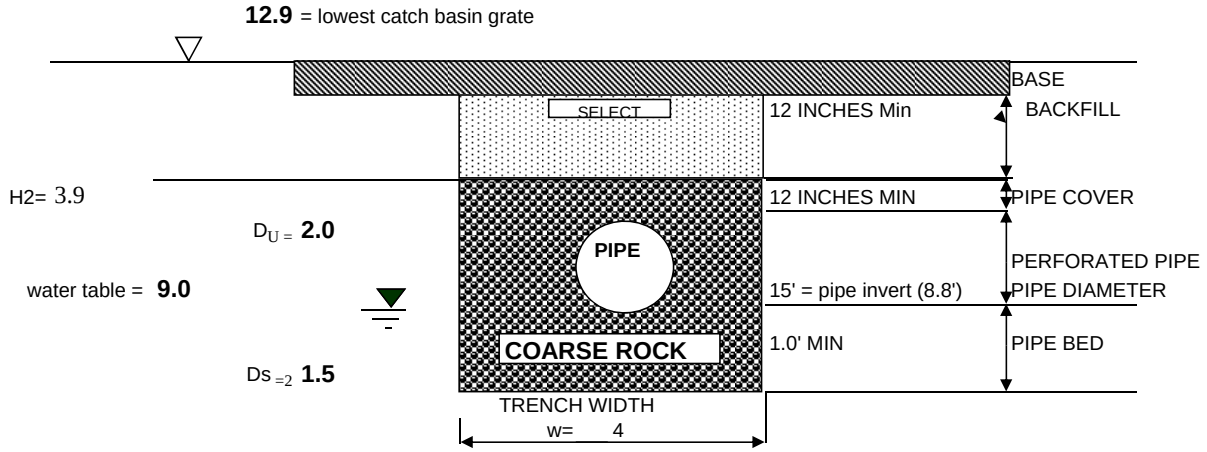

Drainage Area Calculations

Total Site = 37719 sqft 0.8659 Ac-in

Site Area Breakdown

Pervious area

Green area	7690	sf	0.177	Ac
		Total	0.177	Ac

Impervious areas

Building =	7200	sf	0.17	Ac
Asphalt =	22829	sf	0.52	Ac
Total area =			0.69	Ac

Total DA = 0.87 Total imperious = 0.69 AC

Design criteria

1.5	Inches of runoff from the entire site	**1.30**	**Ac-in** ←
0.5	Inches of runoff from the entire site (per SFWMD)	**0.433185**	**Ac-in**

Total treatment : 1.300 AC-Inches using 1.5 inch over the entire site area

Exfiltration Trench Calculations

Percolation Test from geotechnical report gives a K value of 3.00E-04 cfs/ft^2

Design Formula:

$$L = \frac{V}{K(H2*W+2*H2*Du-Du^2+2*H2*Ds)+(1.39e-4)W*Du}$$

K(H2*W+2*H2*Du-Du^2+2*H2*Ds) = 0.01167

(1.39e-4)W*Du= 0.001112

V = Volume Treated	1.300	acre-inches
W = Trench Width	4	feet
K = Hydraulic Conductivity	3.00E-04	cfs/ft^2-ft head
H2 = Depth to Water Table	3.9	feet
Du = Unsaturated Trench Depth	2.0	feet
Ds = Saturated Trench Depth	1.5	feet

S.F. MIN= 2

L = Length of Trench Required ~~**101.71 feet**~~ 315 = Provided S.F.= 2.0

Is Ds greater than Du? **NO**
Is W greater than 2(Du+Ds)? **NO**

If either of the above answers is "YES", then use the following more accurate formula.

Conservative Design Formula:

$$L = \frac{V}{K(2*H2*Du-Du^2+2*H2*Ds)+(1.39e-4)W*Du}$$

K(2*H2*Du-Du^2+2*H2*Ds)= 0.00699

(1.39e-4)W*Du= 0.001112

L = Length of Trench Required **160.45 feet** ←

NOTES: none

Traf Tech
ENGINEERING, INC.

Mr. Lee Thompson
Vice President
H & T Consultants, Inc.
9310 Old Kings Road South, Suite 1001
Jacksonville, Florida 32257

November 3, 2014

Re: 5700 Coconut Creek Parkway – Traffic Impact Statement

Dear Lee:

Traf Tech Engineering, Inc. conducted a traffic evaluation in connection with land use changes associated with a site located at 5700 Coconut Creek Parkway in Broward County, Florida.

Based on the existing development at the site, the approved platted uses and proposed land use, Traf Tech Engineering undertook a trip generation comparison analysis for the site. The analysis was undertaken for daily, AM peak hour, and PM peak hour conditions. The trip generation evaluation was based on trip generation information contained in the Institute of Transportation Engineer's (ITE) *Trip Generation* document (9th Edition).

The results of the trip generation comparison analysis are documented in Tables 1 through 4. Tables 1 and 2 compare the existing gasoline service station with convenience market against a proposed 3,200 square-foot drive-in bank. Tables 3 and 4 document the trips associated with the approved platted uses and the proposed drive-in bank. As indicated in the tables, the proposed drive-in bank result in less daily, less AM and less PM peak hour trips when compared against the existing gasoline service station or the approved platted uses. Therefore, the proposed land-use change will benefit the area transportation system on a daily basis and during both the AM and PM peak hours.

Please give me a call if you have any questions.

Sincerely,

TRAF TECH ENGINEERING, INC.

Joaquin E. Vargas, P.E.
Senior Transportation Engineer

8400 North University Drive, Suite 309, Tamarac, Florida 33321
Tel: (954) 582-0988 Fax: (954) 582-0989

TABLE 1 Trip Generation Summary (Existing Use) 5700 Coconut Creek Parkway								
			AM Peak Hour			PM Peak Hour		
Land Use	**Size**	**Daily Trips**	**Total Trips**	**Inbound**	**Outbound**	**Total Trips**	**Inbound**	**Outbound**
Gasoline Service	1,900	2,313	156	80	76	185	93	92
Subtotal		**2,313**	**156**	**80**	**76**	**185**	**93**	**92**
Pass-by (56%)		-1295	-87	-45	-43	-104	-52	-52
External Trips		**1,018**	**69**	**35**	**33**	**81**	**41**	**40**

Source: ITE Trip Generation Manual (9th Edition)

TABLE 2 Trip Generation Summary (Proposed Use) 5700 Coconut Creek Parkway								
			AM Peak Hour			PM Peak Hour		
Land Use	**Size**	**Daily Trips**	**Total Trips**	**Inbound**	**Outbound**	**Total Trips**	**Inbound**	**Outbound**
Drive-in Bank	3,200	474	39	22	17	78	39	39
Subtotal		**474**	**39**	**22**	**17**	**78**	**39**	**39**
Pass-by (47%)		-223	-18	-10	-8	-37	-18	-18
External Trips		**251**	**21**	**12**	**9**	**41**	**21**	**21**

Source: ITE Trip Generation Manual (9th Edition)

Difference in Trips		**-767**	**-48**	**-23**	**-24**	**-40**	**-20**	**-19**

Traf Tech
ENGINEERING, INC.

TABLE 3 Trip Generation Summary (Approved Platted Uses) 5700 Coconut Creek Parkway								
			AM Peak Hour			PM Peak Hour		
Land Use	**Size**	**Daily Trips**	**Total Trips**	**Inbound**	**Outbound**	**Total Trips**	**Inbound**	**Outbound**
Retail	8,500	1,368	35	21	13	115	55	60
Office	13,000	278	37	33	4	93	16	77
Subtotal		**1,646**	**72**	**54**	**18**	**208**	**71**	**137**
Internal (10%)		-165	-7	-5	-2	-21	-7	-14
Pass-by (Retail-80%)		-1094	-28	-17	-11	-92	-44	-48
External Trips		**387**	**37**	**32**	**5**	**95**	**20**	**75**

Source: ITE Trip Generation Manual (9th Edition)

TABLE 4 Trip Generation Summary (Proposed Use) 5700 Coconut Creek Parkway								
			AM Peak Hour			PM Peak Hour		
Land Use	**Size**	**Daily Trips**	**Total Trips**	**Inbound**	**Outbound**	**Total Trips**	**Inbound**	**Outbound**
Drive-in Bank	3,200	474	39	22	17	78	39	39
Subtotal		**474**	**39**	**22**	**17**	**78**	**39**	**39**
Pass-by (47%)		-223	-18	-10	-8	-37	-18	-18
External Trips		**251**	**21**	**12**	**9**	**41**	**21**	**21**

Source: ITE Trip Generation Manual (9th Edition)

Difference in Trips		**-136**	**-16**	**-20**	**4**	**-54**	**1**	**-54**

Traf Tech
ENGINEERING, INC.

BOUNDARY & TOPOGRAPHIC SURVEY

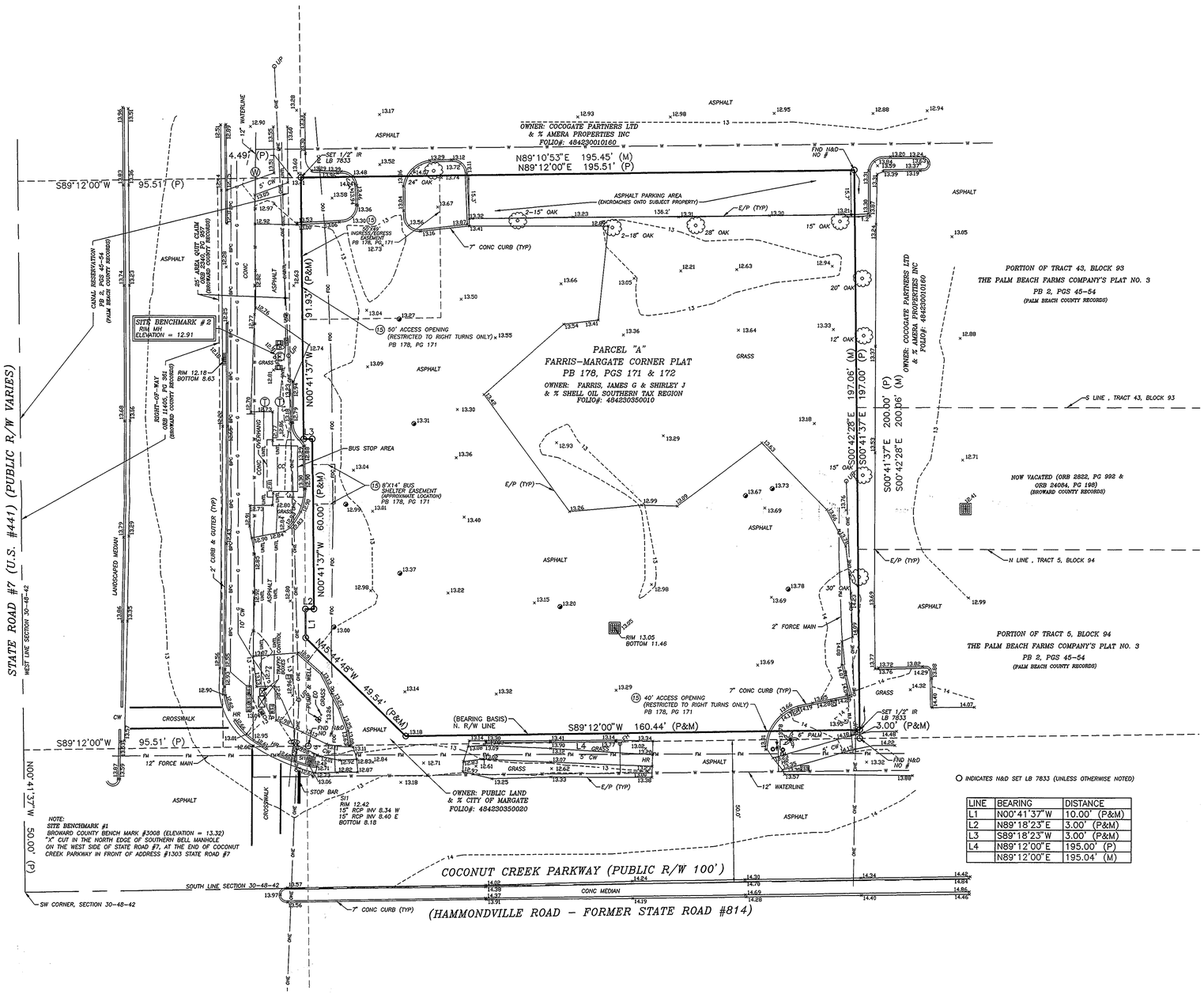

LINE	BEARING	DISTANCE
L1	N00°41'37"W	10.00' (P&M)
L2	N89°18'23"E	3.00' (P&M)
L3	S89°18'23"W	3.00' (P&M)
L4	N89°12'00"E	195.00' (P)
	N89°12'00"E	195.04' (M)

GRAPHIC SCALE
0 20 40
1 INCH = 20 FT.

VICINITY MAP (Not to Scale)

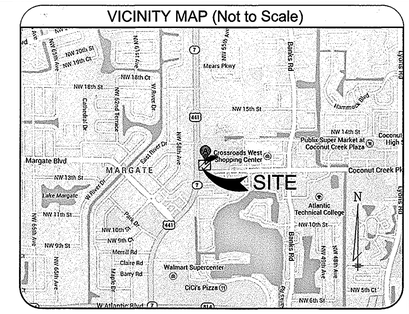

DESCRIPTION:

PARCEL A, FARRIS – MARGATE CORNER PLAT, ACCORDING TO THE PLAT THEREOF AS RECORDED IN PLAT BOOK 178, PAGES 171 AND 172, OF THE PUBLIC RECORDS OF BROWARD COUNTY, FLORIDA.

SCHEDULE B-2 EXCEPTIONS NOTES:

10. INTENTIONALLY DELETED.

11. INTENTIONALLY DELETED.

12. ORDINANCE NO. 2007–30 RECORDED IN OFFICIAL RECORDS BOOK 44650, PAGE 1429, OF THE PUBLIC RECORDS OF BROWARD COUNTY, FLORIDA. (AFFECTS SUBJECT PROPERTY, BLANKET IN NATURE)

13. ORDINANCE NO. 2007–29 RECORDED IN OFFICIAL RECORDS BOOK 44650, PAGE 1467, OF THE PUBLIC RECORDS OF BROWARD COUNTY, FLORIDA. (AFFECTS SUBJECT PROPERTY, BLANKET IN NATURE)

14. INTENTIONALLY DELETED.

15. RESTRICTIONS, DEDICATIONS, CONDITIONS, RESERVATIONS, EASEMENTS AND OTHER MATTERS AS SET FORTH AND/OR SHOWN ON THE PLAT OF FARRIS – MARGATE CORNER PLAT, RECORDED IN PLAT BOOK 178, PAGES 171 AND 172, OF THE PUBLIC RECORDS OF BROWARD COUNTY, FLORIDA, BUT OMITTING ANY COVENANTS OR RESTRICTIONS, IF ANY, BASED UPON RACE, COLOR, RELIGION, SEX, SEXUAL ORIENTATION, FAMILIAL STATUS, MARITAL STATUS, DISABILITY, HANDICAP, NATIONAL ORIGIN, ANCESTRY, OR SOURCE OF INCOME, AS SET FORTH IN APPLICABLE STATE OR FEDERAL LAWS, EXCEPT TO THE EXTENT THAT SAID COVENANT OR RESTRICTION IS PERMITTED BY APPLICABLE LAW. (AFFECTS SUBJECT PROPERTY, AS SHOWN HEREON)

GENERAL SURVEY NOTES:

1. BEARING STRUCTURE BASED ON THE MONUMENTED NORTH RIGHT OF WAY LINE OF COCONUT CREEK PARKWAY; BEING: S89°12'00"W PER PLAT BOOK 178, PAGE 171 PUBLIC RECORDS OF BROWARD COUNTY, FLORIDA.

2. THIS SURVEY REFLECTS ONLY MATTERS OF RECORD AS PROVIDED BY THE CLIENT OR CLIENTS REPRESENTATIVE.

3. THIS SURVEY WAS MADE ON THE GROUND. THE UNDERGROUND UTILITIES SHOWN HAVE BEEN LOCATED FROM FIELD SURVEY INFORMATION AND EXISTING DRAWINGS. THE SURVEYOR MAKES NO GUARANTEE THAT THE UNDERGROUND UTILITIES SHOWN COMPRISE ALL SUCH UTILITIES IN THE AREA, EITHER IN SERVICE OR ABANDONED. THE SURVEYOR FURTHER DOES NOT WARRANT THAT THE UNDERGROUND UTILITIES SHOWN ARE IN THE EXACT LOCATION INDICATED ALTHOUGH HE DOES CERTIFY THAT THEY ARE LOCATED AS ACCURATELY AS POSSIBLE FROM INFORMATION AVAILABLE. THE SURVEYOR HAS NOT PHYSICALLY LOCATED THE UNDERGROUND UTILITIES.

4. THIS SITE LIES IN SHADED ZONE "X", BASED ON FLOOD INSURANCE RATE MAP NO. 12011C0355H, CITY OF MARGATE, FLORIDA AND HAVING AN EFFECTIVE DATE OF AUGUST 18, 2014.

5. ACCORDING TO FLORIDA STATUTES, CHAPTER 472.025, A LAND SURVEYOR SHALL NOT AFFIX HIS SEAL OR NAME TO ANY PLAN OR DRAWING WHICH DEPICTS WORK WHICH HE IS NOT LICENSED TO PERFORM OR WHICH IS BEYOND HIS PROFESSION OR SPECIALTY THEREIN. THEREFORE, WE ARE UNABLE TO CERTIFY AS TO MUNICIPAL ZONING COMPLIANCE, INTERPRETATION OF ZONING CODES OR THE DETERMINATION OF VIOLATIONS THEREOF.

6. THIS SURVEY MADE WITH BENEFIT OF COMMITMENT FOR TITLE NO. 2061–3243753, EFFECTIVE: SEPTEMBER 28, 2014, ISSUED BY FIRST AMERICAN TITLE INSURANCE COMPANY.

7. ELEVATIONS ARE BASED ON BENCHMARK DESIGNATION #3008, BEING: 13.32 FEET, (NGVD 29), PUBLISHED BY THE HIGHWAY CONSTRUCTION & ENGINEERING DIVISION OF BROWARD COUNTY, FLORIDA.

CERTIFIED TO:
Branch Banking and Trust Company, a North Carolina banking corporation; James G. Farris; Shirley J. Farris; GrayRobinson, P.A.; Alston & Bird LLP; First American Title Insurance Company

LEGEND

- AIR RELEASE VALVE
- AUTO SPRINKLER
- BB – BOTTOM OF BANK
- BC – BACK OF CURB
- BFP – BACKFLOW PREVENTER
- BLK – BLOCK
- BFP – BACK FLOW PREVENTER
- BM – BENCHMARK
- BOLLARD
- BPC – BURIED POWER CABLE
- CALC – CALCULATED
- C&M – CALCULATED & MEASURED
- Δ – CENTRAL ANGLE
- CBW – CONCRETE BLOCK WALL
- CC – COVERED CONCRETE
- CF – CONCRETE FLUME
- CHW – CONCRETE HEAD WALL
- CLF – CHAIN LINK FENCE
- ℄ – CENTERLINE
- CM – CONCRETE MONUMENT
- CMP – CORRUGATED METAL PIPE
- CO – CLEAN OUT
- CONC – CONCRETE
- COVD – COVERED
- CP – CONCRETE PAD
- CW – CONCRETE WALKWAY
- D&M – DEED/DESC & MEASURED
- DE – DRAINAGE EASEMENT
- DESC – DESCRIPTION
- DOT INLET
- DP – DUMPSTER PAD
- DW – DRIVEWAY
- ELECTRIC METER
- EO – ELECTRICAL OUTLET
- ESMT – EASEMENT
- E/P – EDGE OF PAVEMENT
- FIRM – FLOOD INSURANCE RATE MAP
- FFE – FINISHED FLOOR ELEVATION
- FH – FIRE HYDRANT
- FL – FLOW LINE
- FLOOD LIGHT
- FND – FOUND
- FOC – FIBER OPTIC CABLE
- FP – FLAG POLE
- GAS LINE
- GAS METER
- GUY WIRE ANCHOR
- HANDICAP PARKING
- HR – HANDICAP RAMP
- INV – INVERT ELEVATION
- IP – IRON PIPE
- IR – IRON ROD
- STORM JUNCTION BOX
- L – ARC LENGTH
- LIGHT POLE
- LSA – LANDSCAPED AREA
- MEAS – MEASURED
- MF – METAL FENCE
- ML – METAL LID
- MS – METAL SHED
- MITERED END SECTION
- MONITORING WELL
- N&D – NAIL & DISK
- NGVD – NATIONAL GEODETIC VERTICAL DATUM
- NTS – NOT TO SCALE
- OHE – OVERHEAD ELECTRIC
- OL – ON LINE
- ORB – OFFICIAL RECORDS BOOK
- OW – OVERHEAD WIRE
- OWW – OVERHEAD WALKWAY
- PB – PLAT BOOK
- PC – POINT OF CURVATURE
- PDOT – PER DEPARTMENT OF TRANSPORTATION R/W MAP
- PEP – PER ENGINEERING PLANS
- PG – PAGE
- PI – POINT OF INTERSECTION
- P&M – PLAT & MEASURED
- POB – POINT OF BEGINNING
- POC – POINT OF COMMENCEMENT
- PP – POWER POLE
- PS – PARKING SPACES
- PT – POINT OF TANGENCY
- PVC – PLASTIC PIPE
- R – CURVE RADIUS
- RP – RAMP
- RCP – REINFORCED CONCRETE PIPE
- R/W – RIGHT OF WAY
- SANITARY MANHOLE
- SAN – SANITARY LINE
- SN – SIGN
- SWF – STOCK WIRE FENCE
- 00.00 – SPOT ELEVATION
- –SD– – STORM/DRAIN LINE
- STORM MANHOLE
- STORM INLET
- TELEPHONE MANHOLE
- TP – TRAFFIC POLE
- TRAFFIC SIGN
- TRANSFORMER/JUNCTION BOX
- TR – TELEPHONE RISER
- TSB – TRAFFIC SIGNAL BOX
- TSW – TRAFFIC SIGNAL WIRE
- TV – CABLE TV RISER
- TYP – TYPICAL
- UE – UTILITY EASEMENT
- UP – UTILITY POLE
- –W– – WATER LINE
- WF – WOOD FENCE
- WATERLINE MANHOLE
- WATER VALVE
- WATER METER
- NUMBER
- EASEMENT NUMBER

ADDRESS:

5700 Coconut Creek Parkway
Margate, FL 33063

Job Information

JOB NO.	900992
CF NO.	BC178–171
FIELD DATE:	10–06–14
SCALE:	1" = 20'
DRAWN BY:	PJT

Revisions

Date:	Description	By:
10–15–14	Added Title Commitment	PJT
10–27–14	Revised per revised Title Commitment	RCJ

Altamax Surveying
910 Belle Avenue, Suite 1140
Casselberry, FL 32708
Phone: (407) 677-0200
Licensed Business No. 7833
www.altamaxsurveying.com
LB 7833
Robert C. Johnson PSM 5551
"NOT VALID WITHOUT THE SIGNATURE AND THE ORIGINAL RAISED SEAL OF THIS FLORIDA LICENSED SURVEYOR AND MAPPER."

SHEET 1 OF 1

F O R :

BRANCH BANKING & TRUST

2525 HOWELL BRANCH ROAD, STE 1021
CASSELLBERRY, FLORIDA 32707

P R O J E C T :

BB&T BANK - COCONUT CREEK

5700 COCONUT CREEK PARKWAY
MARGATE, FLORIDA 33063

PROJECT LOCATION MAP
N.T.S.

NORTH

DESCRIPTION:

PARCEL I.D. NO.: 4842–30–35–0010

PARCEL A, FARRIS MARGATE CORNER PLAT ACCORDING TO THE PLAT THEROF AS RECORDED IN PLAT BOOK 178, PAGES 171 AND 172, OF THE PUBLIC RECORDS OF BROWARD COUNTY, FLORIDA.

SAID LANDS SITUATE, LYING AND BEING IN THE CITY OF MARGATE, BROWARD COUNTY, FLORIDA AND CONTAINING 37,721 SQUARE FEET OR 0.866 ACRES MORE OR LESS.

UTILITY COMPANIES

SANITARY SEWER FORCE LINE:
CITY OF MARGATE
DEPT. OF ENVIRONMENTAL &
ENGINEERING SERVICES
CONTACT: KELLY McATEE, P.E.
(954) 972 - 0828
901 NW 66th AVENUE, SUITE A
MARGATE, FLORIDA 33063

ELECTRIC:
FLORIDA POWER AND LIGHT CO.
CONTACT: BARRY THOMPSON
PHONE: (954) 956-2028
392 U.S. 17, EAST PALATKA, FL 32131

STORM WATER:
SOUTH FLORIDA WATER
MANAGEMENT DISTRICT
PHONE: 1-800-432-2045
3301 GUN CLUB ROAD,
WEST PALM BEACH, FL 33406

DRAINAGE DISTRICT:
COCOMAR WATER CONTROL
DISTRICT - BROWARD COUNTY
PHONE: 954-831-0753
CONTACT: CARL ARCHIE

INDEX OF DRAWINGS

CIVIL
C–0 COVER SHEET
C–1 GENERAL NOTES
C–2 DEMOLITION PLAN
C–3 SITE PLAN
C–4 GRADING & DRAINAGE PLAN
C–5 UTILITIES PLAN
C–6 SITE SIGNING AND PAVEMENT MARKING PLAN
C–7 SITE DETAILS
C–8 UTILITIES DETAILS
C–9 SANITARY LIFT STATION DETAILS
C–10 DRAINAGE DETAILS
C–11 STORMWATER POLLUTION PREVENTION PLAN
C–12 EROSION AND SEDIMENTATION CONTROL PLAN
C–13 EROSION AND SEDIMENTATION CONTROL DETAILS

LANDSCAPE
L–1 TREE & SHRUB PROTECTION PLAN
L–2 LANDSCAPE PLAN
L–3 LANDSCAPE DETAILS
L–4 IRRIGATION PLAN
L–5 IRRIGATION DETAILS

ARCHITECTURAL
A5.1 ELEVATIONS
DE–1 DUMPSTER SCREEN DETAILS
E1.1 PHOTOMETRIC PLAN
E1.2 LIGHTING SCHEDULE

REFERENCE SHEETS
FARRIS – MARGATE CORNER PLAT
BOUNDARY & TOPOGRAPHIC SURVEY

P R E P A R E D B Y :

H & T CONSULTANTS, INC.
PLANNING - ENGINEERING
9310 OLD KINGS ROAD SOUTH, SUITE 1001
JACKSONVILLE, FLORIDA 32257
TELEPHONE (904) 419–1001, FAX (904) 419–1004

ENGINEERS SIGNATURE
STANLEY HILL, P.E.
FLORIDA P.E. NO. 51207

DATE: OCT/31/2014

GENERAL NOTES:

1. EXISTING FEATURES AND BOUNDARY INFORMATION BASED ON A SURVEY BY: ALTAMAX SURVEYING, 910 BELLE AVENUE, SUITE 1140 CASSELBERRY, FL 32708, WWW.ALTAMAXSURVEYING.COM, PHONE: 407-677-0200
2. ALL WORK PERFORMED AND MATERIALS USED WITHIN THE FDOT'S RIGHT-OF-WAYS IF APPLICABLE SHALL BE IN ACCORDANCE WITH THE LATEST EDITION OF THE FDOT'S "DESIGN STANDARDS". ALL AREAS DISTURBED BY THE CONSTRUCTION EFFORT WITHIN SAID RIGHT-OF-WAYS SHALL BE RESODDED TO MATCH THE EXISTING SURROUNDING GRASS COVER.
3. ALL DIMENSIONS ARE TO FACE OF CURB OR FACE OF SIDEWALK UNLESS OTHERWISE NOTED.
4. ALL TRAFFIC SIGNS AND MARKINGS SHALL BE IN ACCORDANCE WITH THE U.S. DEPARTMENT OF TRANSPORTATION MANUAL OF UNIFORM TRAFFIC CONTROL DEVICES (MUTCD), LATEST EDITION.
5. SEE ARCHITECTURAL DRAWINGS FOR CONSTRUCTION DETAILS AND DIMENSIONS OF BUILDINGS.
6. FOR CONCRETE SIDEWALK JOINT LAYOUT UNDER ROOF LINE REFER TO ARCHITECTURAL DRAWINGS.
7. IT IS THE CONTRACTOR'S RESPONSIBILITY TO LOCATE ALL CABLES AND UTILITIES PRIOR TO COMMENCEMENT OF CONSTRUCTION. ANY BREAK IN UNDERGROUND CABLES AND/OR UTILITIES SHALL IMMEDIATELY BE REPAIRED AT THE CONTRACTORS EXPENSE.
8. FDOT STANDARD REFERS TO FDOT LATEST "ENGLISH UNIT" VERSION OF "FDOT DESIGN STANDARDS" MANUAL.
9. NEW SPOT ELEVATIONS REFER TO PROPOSED TOP OF PAVEMENT UNLESS INDICATED OTHERWISE ON THESE DRAWINGS.
10. ALL CONCRETE WORK SHALL CONFORM TO AC1 318-89, "STANDARD BUILDING CODE REQUIREMENTS FOR REINFORCED CONCRETE." ALL CONCRETE SHALL HAVE A MINIMUM COMPRESSIVE STRENGTH OF 3,000 PSI AT 28 DAYS. PROVIDE 3/4" CHAMFER AT ALL EXPOSED CONCRETE EDGES.
11. REINFORCING STEEL SHALL BE BILLET STEEL CONFORMING TO ASTM A615, GRADE 60. UNLESS INDICATED OTHERWISE, MINIMUM SPLICE LENGTH SHALL BE 40 BAR DIAMETERS WHERE CONT. (CONTINUOUS) IS INDICATED ON PLANS.
12. THE CONTRACTOR SHALL FIELD VERIFY LOCATION OF EXISTING STRUCTURES, IMPROVEMENTS, UTILITIES, PROPERTY LINES, EASEMENTS AND SETBACKS, AND CONFIRM ALL PROPOSED DIMENSIONS AND ELEVATIONS PRIOR TO COMMENCING CONSTRUCTION OR ORDERING MATERIALS.
13. THE CONTRACTOR SHALL NOTIFY ALL UTILITY COMPANIES PRIOR TO CONSTRUCTION FOR VERIFICATION AND LOCATION OF ALL UTILITIES (ELECTRIC, GAS, TELEPHONE, ETC.).
14. SHOULD THE SURFACE OR SUBSURFACE CONDITIONS BE FOUND TO VARY FROM WHAT IS SHOWN ON THESE PLANS, THE CONTRACTOR SHALL NOTIFY THE ENGINEER IMMEDIATELY IN WRITING.
15. AS-BUILT DRAWINGS SHALL BE FURNISHED TO THE ENGINEER IN ACCORDANCE WITH THE SPECIFICATIONS AND REQUIREMENTS NOTED ON THIS SHEET.
16. GRADES SHOWN ON PLANS ARE FINISHED GRADES UNLESS OTHERWISE NOTED.
17. THE CONTRACTOR SHALL NOTIFY THE ENGINEER IN WRITING WITHIN 7 DAYS OF COMPLETION OF THE PROJECT, STATING THAT THE DRAINAGE SYSTEM IS COMPLETE AND READY FOR INPECTION AND CERTIFICATION BY THE ENGINEER.
18. DO NOT SCALE THESE DRAWINGS. USE DIMENSIONS ONLY.
19. THE CONTRACTOR SHALL USE NECESSARY MEANS AND METHODS TO CONTROL SURFACE AND GROUNDWATER DURING CONSTRUCTION, INCLUDING BUT NOT LIMITED TO SURFACE GRADING, DEWATERING TRENCHES WITH SUMP PUMP, WELL POINTING, ETC. THE CONTRACTOR IS RESPONSIBLE FOR DETERMINING ACTUAL AND LIKELY DEPTHS TO GROUNDWATER AND THE WATER CONTROL NECESSARY TO MEET MOISTURE AND DENSITY REQUIREMENTS FOR THE NATIVE OR IMPORTED SOILS.
20. THE CONTRACTOR SHALL OBTAIN APPROVAL OF THE ENGINEER AND OWNER PRIOR TO THE EXPORT OF SOILS FROM THE SITE. ANY REMOVAL OF SOIL WITHOUT WRITTEN APPROVAL FROM THE ENGINEER AND OWNER SHALL BE DONE AT THE CONTRACTORS RISK.
21. ALL ON SITE EASEMENTS MUST BE APPROVED AND RECORDED PRIOR TO ISSUANCE OF COs OR TCOs.
22. ALL CONSTRUCTION AND STOCKPILED VEGETATIVE DEBRIS AND FILL WILL BE REMOVED FROM THE SITE, IN THE EVENT A CONSTRUCTION SITE IS ABANDONED PRIOR TO PROJECT COMPLETION.
23. ALL IMPROVEMENTS ARE TO BE OWNED AND MAINTAINED BY THE PROPERTY OWNER AND WILL NOT BE DEDICATED TO THE PUBLIC OR MAINTAINED BY THE PUBLIC.
24. ALL FIRE PREVENTION MEASURES AND PROVISIONS SHALL BE IN ACCORDANCE WITH THE FLORIDA FIRE PREVENTION CODE, 2010 EDITION (FFPC 2010 Ed).

AS-BUILT REQUIREMENTS:

1. THE CONTRACTOR SHALL PROVIDE COMPLETE AS-BUILT INFORMATION TO THE ENGINEER IN ACCORDANCE WITH THE FOLLOWING REQUIREMENTS:
2. AS-BUILT DRAWINGS SHALL BE PREPARED IN AUTOCAD FORMAT BY A REGISTERED LAND SURVEYOR, AND SHALL BE IN CONFORMANCE WITH ALL AUTHORITIES HAVING JURISDICTION. FIVE SET OF SIGNED BLUEPRINTS AND A SET OF AUTOCAD 2004 DRAWING FILES OF THE PROJECT SHALL BE SUBMITTED TO THE ENGINEER FOR REVIEW AND APPROVAL.
3. PROVIDE BUILDING LOCATIONS, FINISHED FLOOR ELEVATIONS, PAVEMENT GRADES AND ALL UNDERGROUND FACILITIES.
4. PROVIDE SPECIAL DETAIL DRAWINGS AT LOCATIONS WHERE INSTALLATIONS WERE NOT AS SHOWN ON CONTRACT DRAWINGS DUE TO FIELD CONDITIONS OR WHERE REQUIRED FOR CLARITY.
5. PROVIDE LOCATION, ELEVATION AND DESCRIPTION OF BENCHMARK(S).
6. LOCATE AND PROVIDE ELEVATIONS OF ALL STRUCTURES. LOCATION OF ALL STRUCTURES SHALL BE FROM (2) DIRECTIONS.
7. LOCATE ALL PIPES AND PROVIDE THEIR SIZE, ELEVATION, LENGTH AND TYPE.

UTILITY NOTES:

1. WHERE WATER MAIN IS LAID UNDER DITCHES, CULVERTS OR OTHER PIPELINES WITHOUT FITTINGS, THE MAXIMUM DEFLECTION AT ANY JOINT SHALL NOT EXCEED 50% OF THE MAXIMUM DEFLECTION RECOMMENDED BY THE MANUFACTURER OF THE PIPE FURNISHED, UNLESS OTHERWISE SHOWN ON DRAWINGS.
2. ALL NEW PIPE SHALL HAVE A MINIMUM DEPTH OF COVER OF 36 INCHES MEASURED FROM THE TOP OF THE PIPE TO THE GROUND SURFACE, EXCEPT AS OTHERWISE NOTED ON DRAWINGS. VERTICAL AND HORIZONTAL ALIGNMENT MAY BE ADJUSTED TO MEET ADVERSE FIELD CONDITIONS UPON APPROVAL BY THE ENGINEER.
3. WHERE WATER AND SEWER MAINS CROSS WITH LESS THAN 18" OF VERTICAL CLEARANCE OR 10 FEET OF HORIZONTAL CLEARANCE, A 20-FOOT SECTION OF DUCTILE IRON SEWER PIPE SHALL BE CENTERED AT THE POINT OF CROSSING. THE CONTRACTOR IS TO FIELD VERIFY SEPARATION.
4. WHEN A WATER OR SEWER MAIN CROSSES A STORM DRAINAGE LINE A MINIMUM OF EIGHTEEN (18) INCHES OF VERTICAL SEPARATION IS REQUIRED OR A 20-FOOT SECTION OF DUCTILE IRON PIPE SHALL BE CENTERED AT THE POINT OF CROSSING.

UTILITY NOTES (CONT.):

5. ALL WORK PERFORMED WITHIN PUBLIC RIGHT-OF-WAY REQUIRES A SEPARATE PERMIT ISSUED BY GOVERNING AUTHORITY.
6. WATER MAINS TO BE PRESSURE TESTED TO 150 PSI FOR A TWO (2) HOUR PERIOD IN ACCORDANCE WITH STANDARDS AND SPECIFICATIONS BY THE CITY OF MARGATE UTILITIES DEPARTMENT, WHO SHALL BE NOTIFIED AT LEAST 24 HOURS IN ADVANCE.
7. ALL D.I. FITIINGS SHALL BE THIN CEMENT LINED. THE LINING SHALL COMPLY WITH ANSI STANDARD A21.4 (AWWA C104-95, LATEST "CEMENT-MORTAR LINING FOR DUCTILE IRON PIPE AND FITTINGS FOR WATER". ALL BOLTS, NUTS, STUDS AND OTHER UNCOATED PARTS OF JOINTS FOR UNDERGROUND INSTALLATION SHALL BE COATED WITH ASPHALT OR COAL-TAR PRIOR TO BACKFILLING. ALL FITTINGS SHALL BE MECHANICALLY RESTRAINED.
8. ALL WATER AND SEWER CONSTRUCTION WITHIN THE THE CITY OF MARGATE SHALL BE PERFORMED BY AN UNDERGROUND UTILITY CONTRACTOR LICENSED UNDER THE PROVISIONS OF CHAPTER 489 OF THE FLORIDA STATUTES.
9. WATER SERVICE LINES TAP TO METERS TO BE POLYETHYLENE TUBING IN ACCORDANCE WITH AWWA C901-96 SPECIFICATIONS. WATER SERVICE LINES FROM METERS TO BACKFLOW PREVENTERS TO BE SCHEDULE 80 PVC. ALL OTHER WATER SERVICE LINES ARE TO BE SCHEDULE 40 PVC.
10. AS-BUILT DRAWINGS SHALL BE PREPARED BY AND BE SIGNED BY E.O.R. AND BE IN ACCORDANCE WITH THE THE CITY OF MARGATE REQUIREMENTS.
11. THE CONTRACTOR SHALL SUBMIT SHOP DRAWINGS FOR ALL STRUCTURES AND MATERIALS TO THE ENGINEER FOR APPROVAL PRIOR TO FABRICATION AND CONSTRUCTION.
12. ALL WATER MAINS SHALL BE DESINFECTED AND BACTERIOLOGICALLY TESTED IN ACCORDANCE WITH DEPARTMENT OF ENVIRONMENTAL PROTECTION REQUIREMENTS. DISINFECTION TESTING SHALL COMPLY WITH A.W.W.A.C-651-92.
13. THE CONTRACTOR SHALL FOLLOW THE PROVISIONS OF FLORIDA STATUTE 386 IF ANY WATER LINE IS BROKEN OR WATER SYSTEM IS SHUT OFF DURING CONSTRUCTION. FLORIDA STATUTE 386 STATES THAT THE HRS FOR THE CITY OF MARGATE PUBLIC HEALTH UNIT DIRECTOR (OR HIS DESIGNEE) OR THE SUBJECT SUPPLIER OF WATER WILL ISSUE A BOIL WATER/BOTTLED WATER NOTICE FOR ALL AFFECTED CUSTOMERS OF THE PUBLIC WATER SUPPLY SYSTEM WHEN AN INTERRUPTION IN SERVICE OCCURS (WHICH RESULTS IN A COMPROMISE OF THE SYSTEM INTEGRITY WHEN THE HEALTH OR LIFE OF AN INDIVIDUAL, OR THE HEALTH OR LIVES OF INDIVIDUALS MAY BE THREATENED OR IMPAIRED OR BY WHICH DISEASE MAY BE CAUSED) OR WHEN A HISTORY OF UNSATISFACTORY BACTERIOLOGICAL SAMPLES RESULT OR WHEN THE SYSTEM PRESSURE DROPS BELOW 20 PSI. THIS BOIL WATER/BOTTLED WATER NOTICE WILL BE LIFTED BY THE HRS THE CITY OF MARGATE PUBLIC HEALTH UNIT DIRECTOR (OR HIS DESIGNEE) WHEN THE SYSTEM PRESSURE AND INTEGRITY ARE INTACT AND, SUBSEQUENTLY, TWO CONSECUTIVE DAYS OF SATISFACTORY MICROBIOLOGICALS ARE DOCUMENTED THROUGH CERTIFIED DRINKING WATER LABORATORY ANALYSIS RESULTS. IN THE CASE WHERE THE SUPPLIER OF WATER ISSUES THE BOIL WATER/BOTTLED WATER NOTICE, THE THE CITY OF MARGATE PUBLIC HEALTH UNIT SHALL BE NOTIFIED AS SOON AS POSSIBLE AND PREFERABLY IN ADVANCE OF THE EVENT. (THE CONTRACTOR SHALL PROVIDE BOTTLED WATER).
14. GRAVITY SEWER PIPES SHALL BE ASTM D-3034 SDR 35, UNLESS OTHERWISE INDICATED ON PLANS.
15. SEWER LINES ARE DESIGNED TO FINISHED GRADE AND SHALL BE PROTECTED FROM DAMAGE UNTIL ALL WORK IS COMPLETED.
16. CONTRACTOR SHALL PROVIDE FOR ALL STORAGE OF MATERIALS AND EQUIPMENT. MATERIALS AND SUPPLIES SHALL BE PLACED THAT ENDANGERMENT OR RESTRICTION OF VEHICULAR OR PEDESTRIAN TRAFFIC WILL NOT OCCUR.
17. IF SOLVENT CONTAMINATION IS FOUND IN THE PIPE TRENCH INTENDED FOR A PROPOSED PLASTIC WATER MAIN, THE CONTRACTOR SHALL STOP WORK AND THE PROPER AUTHORTIES NOTIFIED. WITH APPROVAL OF THE PERMITTING AGENCY, DUCTILE IRON PIPE, FITTINGS AND SOLVENT RESISTANT GASKET MATERIAL SUCH AS FLUOROCARBON SHALL BE USED IN THE CONTAMINATED AREA; THE DUCTILE IRON PIPE SHALL EXTEND AT LEAST 100 FEET BEYOND ANY SOLVENT NOTED. ANY CONTAMINATED SOIL THAT IS EXCAVATED SHALL BE PLACED ON AN IMPERMEABLE MAT AND COVERED WITH A WATER PROOF COVERING. THE PROPER AUTHORITIES WILL BE NOTIFIED AND THE CONTAMINATED SOIL HELD FOR PROPER DISPOSAL.
18. VERTICAL AND HORIZONTAL CHANGES IN WATER MAIN ALIGNMENT AND ALL BENDS, TEES AND VALVES SHALL BE RESTRAINED WITH MECHANICAL JOINT RESTRIANER GLANDS, "MEGALUG" RESTRAINER GLANDS OR APPROVED EQUAL.
19. ALL WATER, SEWER AND FIRE LINE CONSTRUCTION, MATERIALS AND APPRUTANCES SHALL BE IN ACCORDANCE WITH THE CITY OF MARGATE UTILITIES DETAILS, STANDARDS, SPECIFICATIONS AND REQUIREMENTS.
20. SANITARY SEWER CLEANOUTS TO BE PLACED AS SHOWN ON THE ENGINEERING PLANS.
21. NO WATER METER BOXES TO BE PLACED IN SIDEWALK OR DRIVEWAYS.
22. ALL FITTINGS TO BE RESTRAINED.
23. ALL DISTURBED AREAS TO BE SODDED.
24. FIRE HYDRANTS MAY BE UTILIZED TO BLOW-OFF AND FLUSH THE MAINS. HOWEVER, SAMPLE POINTS MUST BE TAKEN AS NOTED ON F.D.E.P. WATER PERMIT.
25. CONTRACTOR TO SUPPLY AND INSTALL NECESSARY BENDS/FITTINGS (TO BE RESTRAINED) TO ALLOW DEFLECTION OF PROPOSED DOMESTIC WATERMAIN AROUND SANITARY SEWER MAINS AND LATERALS. CONTRACTOR TO MAINTAIN 18" VERTICAL SEPARATION AT CROSSINGS.
26. CONTRACTOR TO SUPPLY AND INSTALL NECESSARY BENDS/FITTINGS (TO BE RESTRAINED) TO ALLOW DEFLECTION OF PROPOSED WATERMAIN AROUND PROPOSED STORM SEWER MAINS. CONTRACTOR TO MAINTAIN 6" VERTICAL SEPARATION AT CROSSINGS.
27. ALL FIRE HYDRANTS TO FACE STREET/DRIVE.
28. ALL FIRE HYDRANTS TO BE PLACED 6' FROM EDGE OF PAVEMENT.
29. TAP CONNECTION TO ANY CITY OF MARGATE WATERMAIN WILL REQUIRE A CITY OF MARGATE UTILITIES PERMIT.
30. THE CITY OF MARGATE UTILITIES DEPARTMENT TO OPERATE POTABLE WATER VALVE AT ALL TIE IN LOCATIONS. ANY REQUEST FOR WATER TO BE TURNED ON OR OFF MUST BE COORDINATED THROUGH THE OUC.
31. COPY OF HRS PERMIT WILL BE PROVIDED TO THE CITY OF MARGATE UPON RECIEPT.
32. CONTRACTOR TO COMPLY WITH THE CITY ORDINANCES FOR STORM WATER POLLUTION PREVENTION AND BEST MANAGEMENT PRACTICES.
33. CONTRACTOR TO CONSTRUCT CONCRETE PAD UNDER REDUCED PRESSURE BACKFLOW PREVENTERS.
34. ALL SANITARY SEWER CLEANOUTS IN PAVEMENT AREAS TO BE CAST IRON.
35. ALL SANITARY SEWER CLEANOUT PLUGS TO HAVE FLUSH. (RECESSED)
36. ALL SANITARY SEWER LATERALS TO BE PVC SDR-35.
37. ALL FIRE HYDRANT ASSEMBLIES TO BE RESTRAINED.
38. CONTRACTOR TO PROVIDE 12 GAUGE TRACKING WIRE ON ALL NON-METALLIC WATER AND SEWER MAINS AND SERVICES.

UTILITY NOTES (CONT.):

39. A CITY OF MARGATE RIGHT-OF-WAY USE PERMIT IS REQUIRED WHEN WORKS ARE TO BE PERFORMED IN SUCH ROW.
40. CONTRACTOR TO PROVIDE AND MAINTAIN SIGNAGE FOR SIDEWALK CLOSURE AS PER THE ORANGE COUNTY REQUIREMENTS AND FDOT REQUIREMENTS DURING INSTALLATION OF WATERMAIN, SANITARY SEWER FORCEMAIN, SIDEWALK AND DRIVEWAYS.
41. FDEP WATER AND WASTEWATER PERMITS ALONG WITH THE CITY'S UTILITIES CONSTRUCTION PERMITS ARE REQUIRED.
42. A MINIMUM OF 3 FEET CLEARANCE ON ALL VALVES METER BOXES WITH TREES AND PLANTS. FIRE HYDRANTS SHALL HAVE A MINIMUM CLEARANCE OF 7'-6" AT ITS FRONT AND SIDES AND A 4' MIN. CLEARANCE AT THE BACK.

DEVELOPER/CONSULTANTS

PROPERTY OWNER
FARRIS, JAMES G & SHIRLEY J
% SHELL OIL SOUTHERN TAX REGION
124 ME 3 ST POMPANO BEACH
FLORIDA, 33060

SITE DESIGN ENGINEER
JOSE A. RODRIGUEZ, PE
H & T CONSULTANTS, INC.
9310 OLD KINGS ROAD SOUTH
SUITE 1001 JACKSONVILLE,
FLORIDA 32256
PHONE: (904) 419-1001

LANDSCAPE DESIGNER
A & K LAND PLANNING & DESIGN
8787 SOUTHSIDE BLVD. #511,
JACKSONVILLE, FLORIDA 32256
CONTACT: KRISTOFFER REED RLA
PHONE: (904) 476-9692

PROPERTY DEVELOPER
BB&T COMPANY
2525 HOWELL BRANCH ROAD,
SUITE 1021 CASSELLBERRY,
FLORIDA 32707
CONTACT: DOUG HUESING (CBRE)
PHONE: (980) 275-1423

SURVEYOR
ALTAMAX SURVEYING, 910 BELLE
AVENUE, SUITE 1140
CASSELBERRY, FL 32708,
WWW.ALTAMAXSURVEYING.COM,
PHONE: 407-677-0200

ABBREVIATIONS & SYMBOLS

BB – BOTTOM OF BANK
BC – BACK OF CURB
BLK – BLOCK
BFP – BACK FLOW PREVENTER
BM – BENCHMARK
BPC – BURIED POWER CABLE
CALC – CALCULATED
C&M – CALCULATED & MEASURED
CBW – CONCRETE BLOCK WALL
CC – COVERED CONCRETE
CF – CONCRETE FLUME
CHW – CONCRETE HEAD WALL
CLF – CHAIN LINK FENCE
CL – CENTERLINE
CM – CONCRETE MONUMENT
CMP – CORRUGATED METAL PIPE
CO – CLEAN OUT
CONC – CONCRETE
COVD – COVERED
CP – CONCRETE PAD
CW – CONCRETE WALKWAY
D&M – DEED/DESC & MEASURED
DE – DRAINAGE EASEMENT
DESC – DESCRIPTION
DP – DUMPSTER PAD
DW – DRIVEWAY
EB – ELECTRICAL BOX
ESMT – EASEMENT
E/P – EDGE OF PAVEMENT
FIRM – FLOOD INSURANCE RATE MAP
FFE – FINISHED FLOOR ELEVATION
FH – FIRE HYDRANT
FDC – FIRE DEPARTMENT CONNECTION
– FLOOD LIGHT
FND – FOUND
FOC – FIBER OPTIC CABLE
FP – FLAG POLE
–G– – GAS LINE
GM – GAS METER
V – GUY WIRE ANCHOR
– HANDICAP PARKING
HR – HANDICAP RAMP
INV – INVERT ELEVATION
IP – IRON PIPE
IR – IRON ROD
JB – STORM JUNCTION BOX
L – ARC LENGTH
– LIGHT POLE
LSA – LANDSCAPED AREA
MEAS – MEASURED
MF – METAL FENCE
ML – METAL LID
MS – METAL SHED
– MITERED END SECTION
– MONITORING WELL
N&D – NAIL & DISK
NGVD – NATIONAL GEODETIC VERTICAL DATUM
NTS – NOT TO SCALE
OHE – OVERHEAD ELECTRIC
OL – ON LINE
ORB – OFFICIAL RECORDS BOOK
OW – OVERHEAD WIRE
OWK – OVERHEAD WALKWAY
PB – PLAT BOOK
PC – POINT OF CURVATURE
PDOT – PER DEPARTMENT OF TRANSPORTATION
PEP – PER ENGINEERING PLANS
PG – PAGE
PI – POINT OF INTERSECTION
P&M – PLAT & MEASURED
POB – POINT OF BEGINNING
POC – POINT OF COMMENCEMENT
PP – POWER POLE
PS – PARKING SPACES
PT – POINT OF TANGENCY
PVC – PLASTIC PIPE
R – CURVE RADIUS
RP – RAMP
RCP – REINFORCED CONCRETE PIPE
R/W – RIGHT OF WAY
– SANITARY MANHOLE
SAN – SANITARY LINE
SN – SIGN
SWF – STOCK WIRE FENCE
00.00 – SPOT ELEVATION
–SD– – STORM/DRAIN LINE
– STORM MANHOLE
–T– – UNDERGROUND TELEPHONE
– STORM CATCH BASIN
TB – TOP OF BANK
TP – TRAFFIC POLE
– TRAFFIC SIGN
T – TRANSFORMER/JUNCTION BOX
TR – TELEPHONE RISER
TSB – TRAFFIC SIGNAL BOX
TSW – TRAFFIC SIGNAL WIRE
TV – CABLE TV RISER
TYP – TYPICAL
UE – UTILITY EASEMENT
UP – UTILITY POLE
–W– – WATER LINE
WF – WOOD FENCE
WLF – WETLAND FLAG
WS – WOOD SHED
– WATER VALVE
– WATER METER
– NUMBER
– EASEMENT NUMBER

REVISIONS
DATE

BB&T - COCONUT CREEK BRANCH
5700 COCONUT CREEK PARKWAY
MARGATE, FLORIDA 33063

BB&T

GENERAL NOTES

H & T CONSULTANTS, INC.
PLANNING – ENGINEERING
9310 OLD KINGS ROAD SOUTH, SUITE 1001
JACKSONVILLE , FLORIDA 32257
PHONE: 904-419-1001 FAX: 904-419-1004

H&T

JOB NO:
DRAWN: JRT
CHECK: LT
DATE: OCT-31-14
PLATE
C-1
SHEET OF

LEGEND

SYMBOL	DESCRIPTION
	EXISTING CONCRETE TO REMAIN
	EXISTING CONCRETE TO BE REMOVED
	EXISTING ASPHALT PAVEMENT TO BE REMOVED
	PROPERTY LINE
	EXISTING STRUCTURE LINE
	EXISTING EASEMENT
	EXISTING SANITARY SEWER MH
	EXISTING STORM SEWER MH
OR	EXISTING DRAINAGE INLET
	EXISTING STRUCTURE TO BE REMOVED OR RELOCATED
	EXISTING TREE TO REMAIN, PROVIDE PROTECTION BARRIER
OHE OHE W W FM FM FOC UNTL FOC UNTL G G	EXISTING UTILITY LINES TO REMAIN (APPROXIMATE LOCATION)

EXISTING LAND USE ALLOCATION DATA:

DESCRIPTION	TOTAL S.F. (AC.)	TOTAL (%)
PARCEL "A" AREA	37,719 (0.87)	100
LANDSCAPE / PERVIOUS AREA	13,899 (0.32)	42
PAVEMENT / IMPERVIOUS AREA	23,820 (0.55)	58

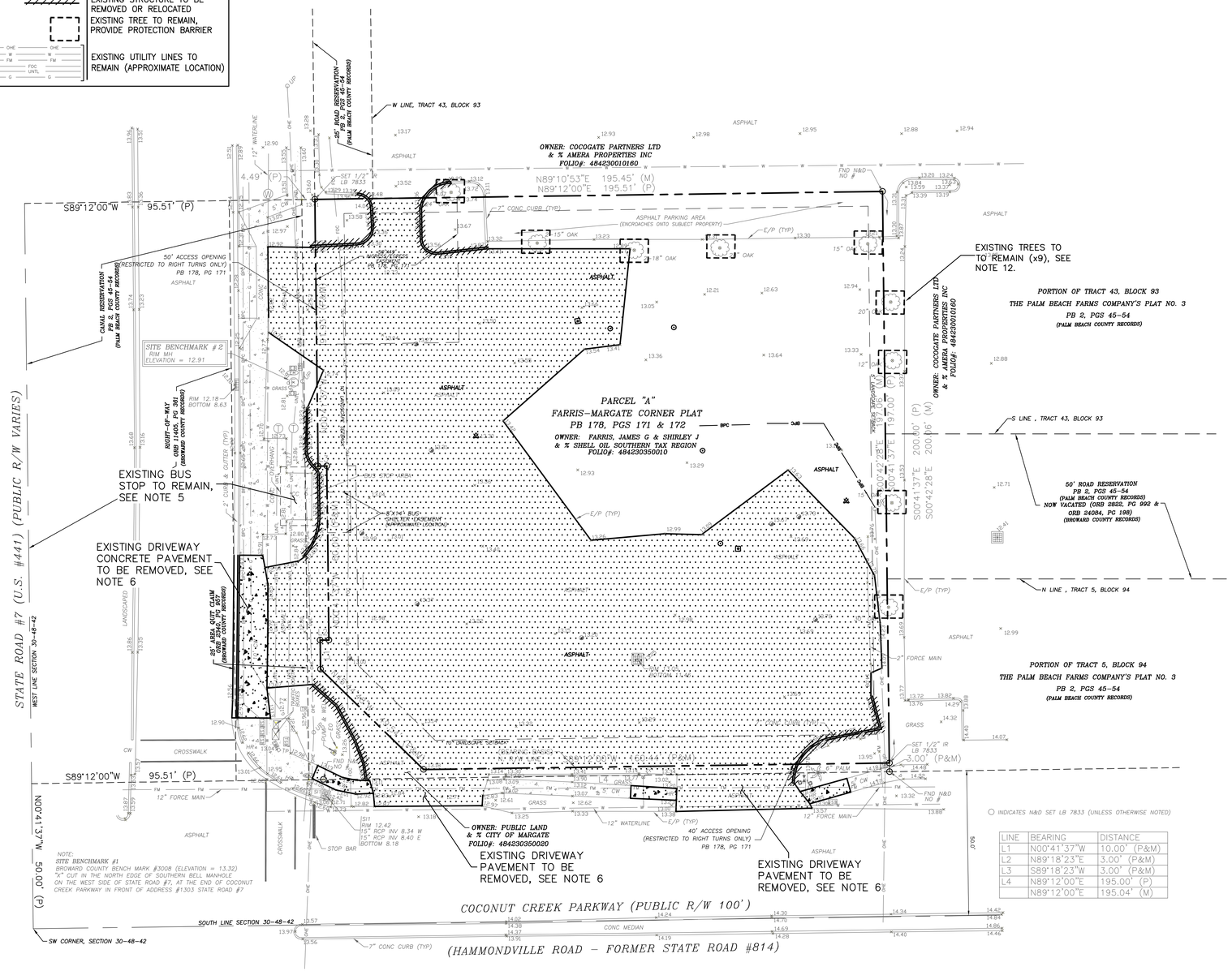

LINE	BEARING	DISTANCE
L1	N00°41'37"W	10.00' (P&M)
L2	N89°18'23"E	3.00' (P&M)
L3	S89°18'23"W	3.00' (P&M)
L4	N89°12'00"E	195.00' (P)
	N89°12'00"E	195.04' (M)

○ INDICATES N&O SET LB 7833 (UNLESS OTHERWISE NOTED)

DEMOLITION PLAN

DEMOLITION NOTES:

1. CONTRACTOR SHALL OBTAIN ADVANCE APPROVAL FROM PROJET ENGINEERS FOR DIMENSIONS AND LIMITS OF DEMOLITION AND REMOVAL WORKS.
2. EROSION & SEDIMENTATION CONTROL PLAN SHOWN ON SHEETS C–10 AND C–11 SHALL BE IMPLANTED AT PROJECT SITE PRIOR TO THE DEMOLITION WORKS AND SHALL BE MAINTAINED AT ALL TIMES DURING PROJECT CONSTRUCTION.
3. CONTRACTOR SHALL LOCATE AND REMOVE EXISTING STRUCTURES AND UTILITIES (BOTH ABOVE AND BELOW GRADE) WITHIN DEVELOPMENT AREAS, AS SHOWN ON THIS PLAN. STAKE AND FLAG LOCATION OF UNDERGROUND UTILITIES.
4. DO NOT USE DROP HAMMER NEAR EXISTING UNDERGROUND UTILITIES OR OTHER SENSITIVE STRUCTURES.
5. PROTECT ADJACENT PUBLIC AND PRIVATE PROPERTY, STRUCTURES, TREES, PLANTS, PAVEMENT, UTILITIES AND ANY OTHER ITEMS DESIGNETED TO REMAIN.
6. WHERE EXISTING PAVEMET, CURB, GUTTER OR CONCRETE SLAB IS TO REMAIN, MAKE STRAIGHT SAW CUTS INTO THE EXISTING STRUCTURE TO PROVIDE A CLEAN BREAK PRIOR TO REMOVAL. DO NOT BRAKE CONCRETE PAVEMENT OR BASE WITH DROP HAMMER UNLESS CONCRETE OR BASE HAS BEEN CUT TO A MINIMUM DEPTH OF 2 INCHES.
7. REMOVE SIDEWALKS AND CURBS TO NEAREST EXISTING DUMMY, EXPANSION OR CONSTRUCTION JOINT.
8. WHERE EXISTING END OF STORM DRAIN PIPE OR END SEWER IS TO REMAIN, INSTALL 8" THICK MANSORY PLUG IN PIPE END PRIOR TO BACKFILL.
9. REMOVE ALL DEBRIS FROM SITE IN ACCORDANCE WITH CITY OF MARGATE REQUIREMENTS FOR WASTE METERIAL DISPOSAL
10. CONTRACTOR SHALL IMMEDIATLY REPAIR ANY DAMAGE TO EXISTING STRUCTURES MADE DURING DEMOLITION/CONSTRUCTION OPERATIONS. DAMAGED ITEMS SHALL BE RESTORED TO A CONDITION EQUAL OR BETTER THAN THE ACTUAL.
11. ALL STRUCTURES AND ITEMS WHITIN THE HATCHED AREA SHALL BE DEMOLISHED AND REMOVED, UNLESS OTHERWISE NOTED IN THIS PLAN. ASSOCIATED APPURTENANCES, SUCH AS PIPES, WIRES, CONDUITS, UNDERGROUND UTILITIES, ETC. SHALL ALSO BE REMOVED WITHIN THE AREA.
12. EXISTING TREES BE PROTECTED AND/OR RELOCATED ARE SHOWN IN LANDSCAPE PLANS. SEE SHEET L–1 FOR ADDITIONAL INFORMATION ON PROPOSED SCHEME AND POCEDURES TO BE CARRIED OUT WITH EXISTING TREES AND SHRUB.
13. CONTRACTOR SHALL OBTAIN AN ENCROACHMENT PERMIT, THROUGH THE CITY'S OFFICE OF THE CITY ENGINEER BRANCH, PRIOR ANY WORK INTO, UPON, OVER, OR UNDER THE CITY'S RIGHT–OF–WAY. ENCROACHMENT PERMIT COVERS TUNNELS, VAULTS, PEDESTRIAN WALKWAYS, BASEMENTS, TIEBACKS, RAILROAD SPURS, PIPELINES, HIGH AND LOW VOLTAGE CIRCUITS, CABLES, CONDUITS, SIGNS, TANKS, BALCONIES, CANOPIES, ETC. FOR THESE PURPOSES THE RIGHT–OF–WAY IS DEFINED AS THE ENTIRE WIDTH BETWEEN THE BOUNDARY LINES OF EVERY STREET WAY WHICH IS HELD BY THE CITY IN FEE OR BY EASEMENT OR DEDICATION; THE TERM 'PUBLIC STREET' SHALL INCLUDE ANY DESIGNATED STATE OR FEDERAL HIGHWAY OR ROAD OR ANY DESIGNATED COUNTY ROAD WHICH IS UNDER THE ADMINISTRATIVE CONTROL OF THE CITY FOR MAINTENANCE, REPAIR OR VEHICULAR TRAFFIC CONTROL PURPOSES.
14. CONTRACTOR SHALL OBTAIN A DEMOLITION (DEMO) PERMIT FROM THE CITY OF MARGATE PRIOR ANY DEMOLITION WORK. A DEMO PERMIT IS REQUIRED FOR THE DEMOLITION OF ANY STRUCTURE OR BUILDING REGARDLESS OF WHETHER IT IS A COMMERCIAL OR A RESIDENTIAL PROPERTY. A BUILDING DEMO PERMIT REQUIRES THE REMOVAL OF ALL CONSTRUCTION MATERIALS FROM THE JOBSITE INCLUDING THE BUILDING SLAB (WITH CERTAIN EXCEPTIONS IF APPROVED BY THE BUILDING OFFICIAL). THE SITE MUST BE LEFT FREE OF DEBRIS AND BE LEVEL WITHIN THE BOUNDARIES OF THE PROPERTY. A DEMO PERMIT DOES NOT AUTHORIZE WORK LOCATED IN THE RIGHT–OF–WAY SUCH AS, "SIDEWALKS, DRIVEWAYS, CURBS, OR ACCESSIBILITY RAMPS." DEPENDING ON THE NOISE LEVEL AND DURATION OF THE DEMOLITION, A NOISE PERMIT MAY BE REQUIRED BY THE DEMOLITION CONTRACTOR.

NORTH

20' 0 20'
SCALE: 1"=20'

	DATE	REVISIONS

BB&T - COCONUT CREEK BRANCH
5700 COCONUT CREEK PARKWAY
MARGATE, FLORIDA 33063

DEMOLITION PLAN

H & T CONSULTANTS, INC.
PLANNING – ENGINEERING
9310 OLD KINGS ROAD SOUTH, SUITE 1001
JACKSONVILLE , FLORIDA 32257
PHONE: 904–419–1001 FAX: 904–419–1004

JOB NO:
DRAWN: ALT
CHECK: SGH
DATE: OCT–31–14
PLATE
C-2
SHEET OF

LEGEND

SYMBOL	DESCRIPTION
	PROPOSED CONCRETE
ASPHALT	PROPOSED LIGHT DUTY ASPHALT PAVEMENT (LDAP)
ASPHALT	PROPOSED HEAVY DUTY ASPHALT PAVEMENT (HDAP)
	PROPOSED PROPERTY LINE
	EXISTING PROPERTY LINE
	PROPOSED BUILDING LINE
	EXISTING BUILDING LINE
	EXISTING EASEMENT
	EXISTING SANITARY SEWER MH
	EXISTING STORM SEWER MH
OR	EXISTING DRAINAGE INLET
	TO BE REMOVED OR RELOCATED
	PROPOSED CURB AND GUTTER
	PROP. DRAINAGE INLET OR MH

SITE LAYOUT NOTES

1. THIS PLAN IS NOT A SURVEY. REFER TO THE ENCLOSED SURVEY FOR SURVEY INFORMATION. THE BOUNDARY SHOWN MUST BE VERIFIED BY THE LICENSED SURVEYOR PERFORMING THE SITE STAKEOUT. PROPERTY LINES MUST BE ESTABLISHED IN THE FIELD BY THE LICENSED SURVEYOR PERFORMING THE STAKEOUT.
2. ALL DIMENSIONS & RADII ARE TO FACE OF CURB UNLESS OTHERWISE ILLUSTRATED BELOW. REFER TO ARCHITECTURAL PLANS FOR EXACT BUILDING AND CANOPY DIMENSIONS. ALL CURB RAMPS AND ACCESSIBILITY ROUTES SHALL BE IN ACCORDANCE WITH ADA/FDOT
3. FOR HANDICAP PARKING, PAVEMENT MARKING AND SIGNAGE DETAILS SEE SHEET C-5

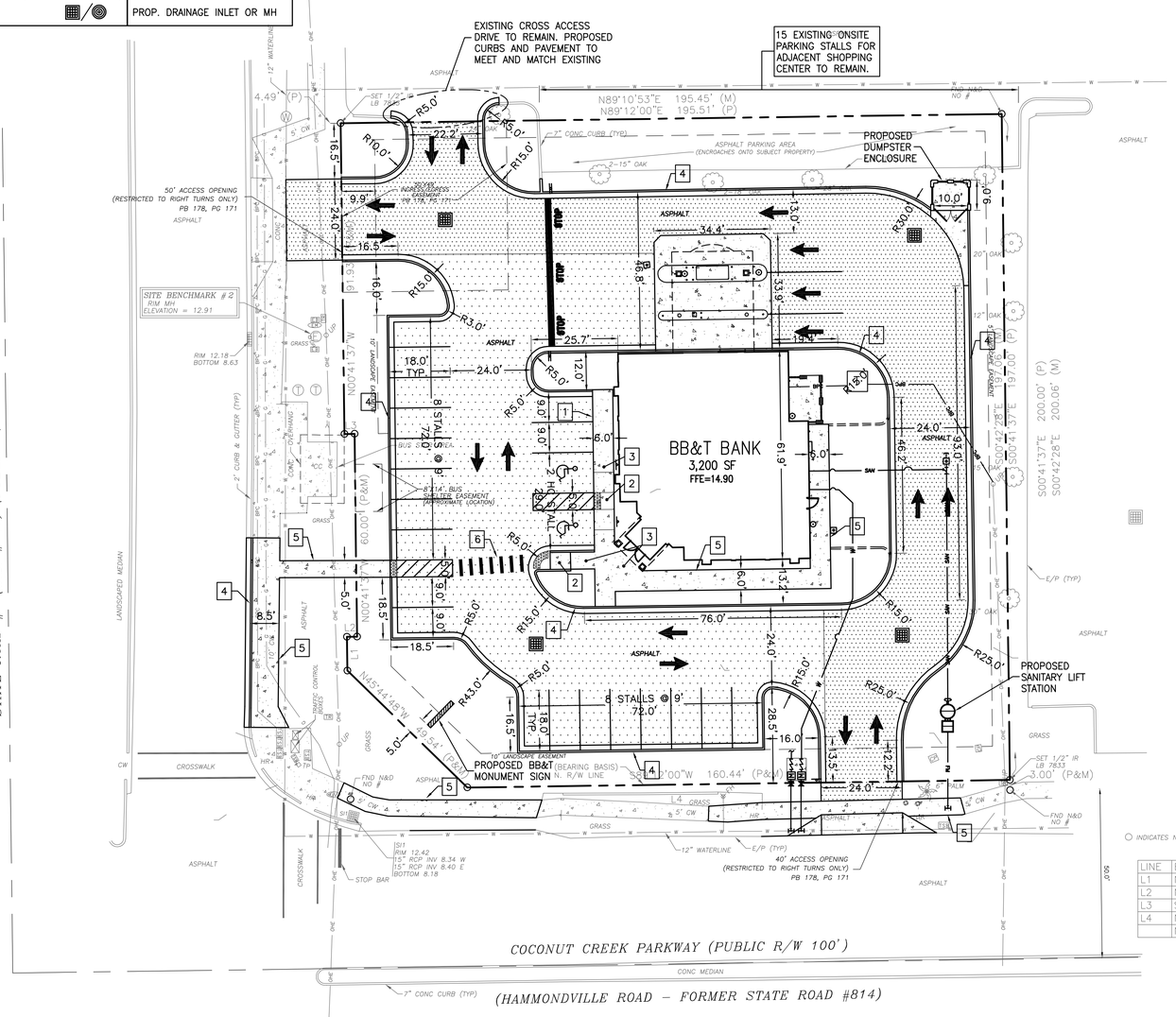

NOTES

1. CONSTRUCT TURN DOWN SIDEWALK ADJACENT TO PAVEMENT AND PARKING. DO NOT EXCEED 5% RUNNING SLOPE & 2% CROSS SLOPE, SEE DETAIL ON SHEET C-7.
2. CONSTRUCT HANDICAP ACCESSIBLE RAMP WITH DETECTABLE WARNING SURFACE PER ADA AND ORANGE COUNTY STANDARDS AND SPECIFICATIONS. SEE SHEET C-7 FOR TYPICAL DETAILS.
3. PROPOSED 5' WIDE CONCRETE LANDING 2% MAX SLOPE IN ALL DIRECTIONS. CONSTRUCT PER ADA AND ORANGE COUNTY STANDARDS AND SPECS.
4. CONSTRUCT FDOT CURB AND GUTTER TYPE F, SEE TYPICAL DETAIL ON SHEET C-7.
5. PROPOSED CONCRETE SIDEWALK WITH 5% MAX RUNNING SLOPE & 2% MAX CROSS SLOPE, SEE TYPICAL DETAIL ON SHEET C-7.
6. PROPOSED 5' WIDE CROSSWALK. DO NOT EXCEED 5% RUNNING SLOPE & 2% CROSS SLOPE. SEE SHEET C-6 FOR TYPICAL DETAIL.

SITE DATA TABLE

PROJECT DATA

OWNER: BRANCH BANK AND TRUST COMPANY
2525 HOWELL BRANCH ROAD, SUITE 1021
CASSELLBERRY FLORIDA 32707
PHONE: 904-626-2722

AGENT: H & T CONSULTANTS, INC.
9310 OLD KINGS ROAD SOUTH, SUITE 1001
JACKSONVILLE, FLORIDA 32257
PHONE (904) 419-1001

PROJECT NAME: BB&T BANK – COCONUT CREEK

USE: BANK WITH DRIVE-THRU TELLERS

NUMBER OF STORIES: 1 STORY

HEIGHT:

BUILDING SQUARE FOOTAGE:
3,200 S.F. (TOTAL A/C AREA)
4,000 S.F. (TOTAL UNDER ROOF INCLUDING DRIVE-THRU AND VESTIBULE)

LAND USE DESIGNATION: COMMERCIAL / RETAIL

ZONING: TOC-G

SETBACK	REQUIRED	PROVIDED
SIDES (E)	–	58'
FRONT (W)	–	76.5'
SIDES (N)	–	76'
FRONT (S)	–	63'

PARKING DATA:

USE	REQUIRED	PROVIDED
BANK ONLY	1 SPACES/200 sf = 16	20
H.C.	1 PER /25 SPACES = 1	2
TOTAL	17	22

LANDSCAPING/OPEN SPACE

SETBACK	REQUIRED	PROVIDED
FRONT (W)	10'	10'
REAR/SIDE (E)	5'	5'
SIDES STREET (S)	10'	10'
SIDES (N)	5'	6'

UTILITY DATA:

USE	PROVIDER
ELECTRIC	
WATER	
SANITARY SEWER	
TELEPHONE / COM	

LAND USE ALLOCATION DATA:

DESCRIPTION	TOTAL S.F. (AC.)
PARCEL AREA	40,000 (0.91)
OPEN SPACE/BUFFERS	
BLDG. COVERAGE	3,152 (0.07)
VUA (INCLUD. DRIVE THRU)	
PEDESTRIAN USE AREAS (S/W)	
FLOOR AREA RATIO	3,152/40,000 = 0.07

NORTH

SCALE: 1"=20'

REVISIONS

DATE

BB&T - COCONUT CREEK BRANCH
5700 COCONUT CREEK PARKWAY
MARGATE, FLORIDA 33063

SITE PLAN

H & T CONSULTANTS, INC.
PLANNING – ENGINEERING
9310 OLD KINGS ROAD SOUTH, SUITE 1001
JACKSONVILLE , FLORIDA 32257
PHONE: 904-419-1001 FAX: 904-419-1004

JOB NO:
DRAWN: ALT
CHECK: SGH
DATE: OCT 2014
PLATE
C-3
SHEET OF

LEGEND

SYMBOL	DESCRIPTION
	PROPOSED CONCRETE
ASPHALT	PROPOSED ASPHALT PAVEMENT
	PROPERTY LINE
	PROPOSED BUILDING LINE
	EXISTING BUILDING LINE
	EXISTING EASEMENT
	EXISTING GRADING CONTOURS
SD SD SD	EXISTING STORM SEWER PIPE
× 53.00	EXISTING SPOT ELEVATION
50	PROPOSED GRADING CONTOURS
14.5 / 14.0	PROP. TOP OF CURB ELEV. /TOP OF PAVEMENT ELEV.
	PROPOSED DRAINAGE FLOW
	EXISTING SANITARY SEWER MH
	EXISTING STORM SEWER MH
OR	EXISTING DRAINAGE INLET
SD SD	PROPOSED STORM SEWER PIPE
	PROPOSED STORM SEWER MH
	PROPOSED DRAINAGE INLET
	PROP. STORM DRAIN CLEANOUT
	PROP. ROOF DRAIN DOWNSPOUT
	PROPOSED CURB AND GUTTER
	DRAINAGE AREA LIMIT

(±) = APPROXIMATE FINAL GRADE, MAY BE ADJUSTED IN FIELD TO MEET AND MATCH EXISTING.

ROOF & YARD DRAIN CONNECTION NOTES:

Ⓐ CONST. 12" PVC ROOF DRAIN PIPE AT 1.0% MINIMUM SLOPE AND CONNECT TO STORM LINE OR PROPOSED INLET AS SHOWN ON THIS PLAN. PROVIDE CONNECTIONS AS SHOWN. COORDINATE WITH ARCHITECTURAL AND PLUMBING PLANS.

Ⓑ CONST. 6" PVC ROOF DRAIN PIPE AT SLOPE 1.0% MINIMUM AND CONNECT TO STORM LINE OR PROPOSED INLET AS SHOWN ON THE PLAN. PROVIDE PIPE TURN UPS AT DOWNSPOUTS AS SHOWN. COORDINATE WITH ARCHITECTURAL AND PLUMBING PLANS.

Ⓒ CONSTRUCT 6" PVC CLEANOUT WITH TRAFFIC BEARING TOP WHERE REQUIRED. SEE DETAIL ON SHEET C-10.

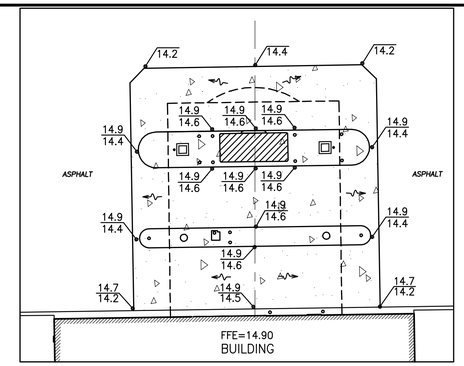

DRIVE-THRU GRADING DETAIL
SCALE: 1"=10'

DRAINAGE STRUCTURE TABLE

STRUCTURE	TYPE	GRATE/RIM ELEVATION	INVERT ELEVATIONS NORTH	EAST	WEST	SOUTH
S-1	TYPE "C" INLET	13.30	–	–	–	8.80
S-2	TYPE "C" INLET	13.30	8.80	–	8.80	–
S-3	TYPE "C" INLET	12.90	–	–	–	8.80
S-4	TYPE "C" INLET & WEIR	13.40	8.80	8.80	–	8.80
SI1	EXISTING INLET	12.42	8.40	*8.40	*8.34	*8.18
–	–	–	–	–	–	–
–	–	–	–	–	–	–
–	–	–	–	–	–	–
–	–	–	–	–	–	–
–	–	–	–	–	–	–
–	–	–	–	–	–	–

* EXISTING STORM SEWER INVERT ELEVATIONS TO BE VERIFIED BY CONTRACTOR BEFORE COMMENCING WORK.

STORM PIPE TABLE

P-1 CONST. 105 L.F. OF EXFILTRATION TRENCH W/15" HDPE PERFORATED PIPE AND 10 L.F. W/15" HDPE NON-PERFORATED PIPE @ S=0%

P-2 CONST. 95 L.F. OF EXFILTRATION TRENCH W/15" HDPE PERFORATED PIPE AND 10 L.F. W/15" HDPE NON-PERFORATED PIPE @ S=0%

P-3 CONST. 115 L.F. OF EXFILTRATION TRENCH W/15" HDPE PERFORATED PIPE AND 10 L.F. W/15" HDPE NON-PERFORATED PIPE @ S=0%

P-4 73 L.F. OF 15" HDPE NON-PERFORATED PIPE @ S=0.55%

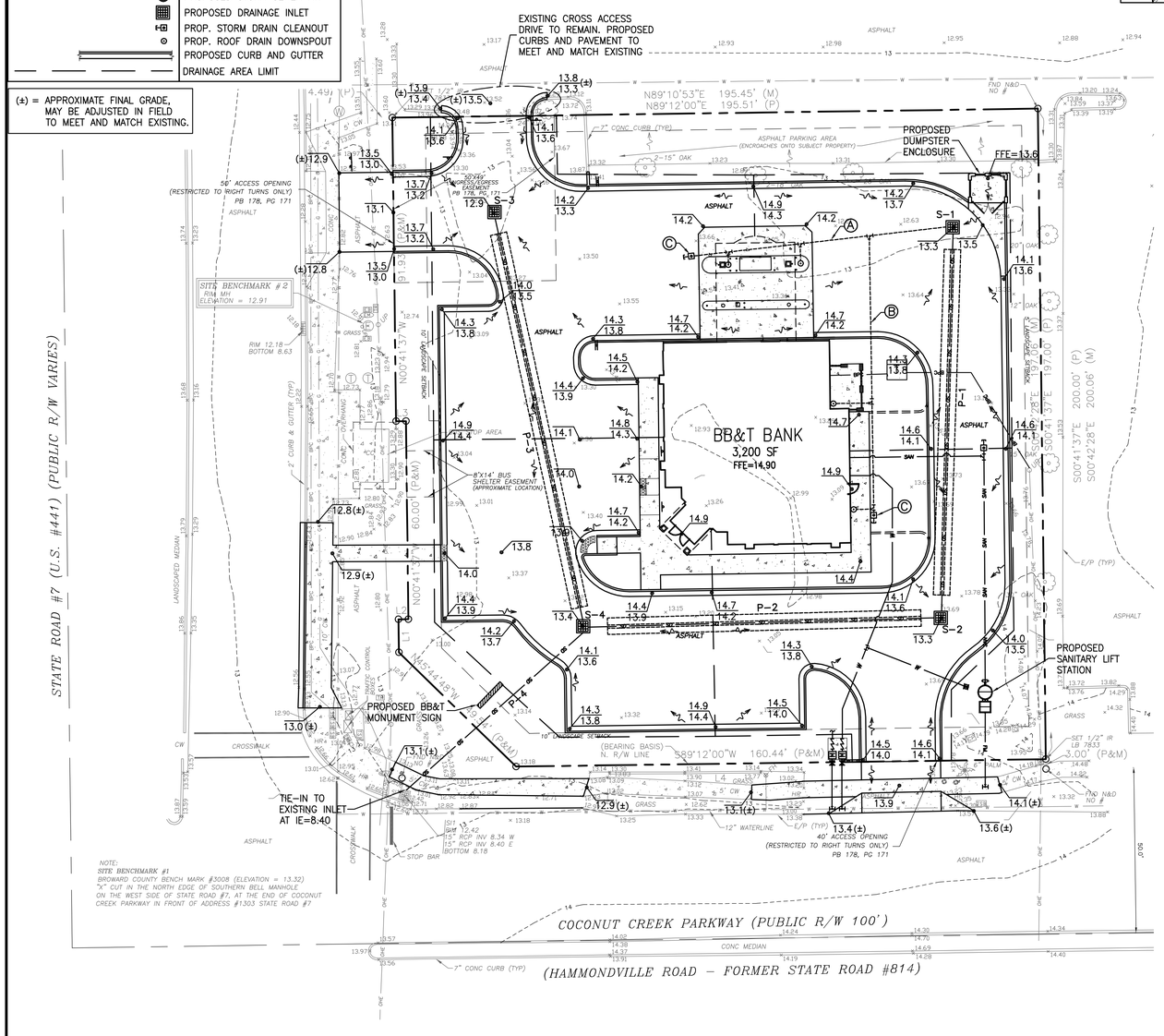

DRAINAGE NOTES:

1. DRAINAGE STRUCTURES SHALL BE CONSTRUCTED PER FDOT STANDARDS AND SPECIFICATIONS, INDEXES 200, 201, 232 & 234 AND CITY OF MARGATE STANDARD DRAWINGS AND SPECIFICATIONS. (ALL STRUCTURES AND TOPS SHALL BE TRAFFIC BEARING).
2. STORM DRAIN PIPES SHALL BE INSTALLED USING BEDDING AND TRENCHING TYPE "A", PER CITY OF MARGATE STANDARD DETAILS, UNLESS OTHERWISE INDICATED BY THE ENGINEER. SEE STANDARD DETAIL ON SHEET C-10.
3. ALL HDPE STORM PIPE CONNECTIONS AND JOINTS SHALL HAVE PREMIMUM WATER TIGHT COUPLER CONNECTIONS AND BE WRAPPED WITH FILTER CLOTH SEE PIPE CONNECTION DETAIL ON DETAIL SHEET C-10.
4. INSTALL SKIMMERS TYPE 1 ON STRUCTURES S-1, S-2, S-3 AND S-4 AT BOTH PIPE OPENINGS (INLET AND OUTLET PIPES) PER FDOT INDEX NO. 241.

EROSION CONTROL NOTES:

1. ALL AREAS DISTURBED AND LEFT FOR MORE THAN 30 DAYS MUST BE SEEDED AND MULCHED UNLESS OTHERWISE NOTED. CONTRACTOR MUST MAINTAIN NEWLY GRADED AREAS AND REPAIR AREAS WHERE SETTLING AND EROSION HAVE OCCURRED.
2. CONTRACTOR MUST PROVIDE ALL MATERIALS AND TAKE WHATEVER MEANS NECESSARY TO PREVENT THE EROSION OF AND DEPOSIT OF SEDIMENT ON ADJACENT AND DOWNSTREAM PROPERTIES. CONTRACTOR MUST IMPLEMENT AND PROVIDE SUITABLE EROSION CONTROL MEASURES (I.E. SEDIMENTATION BARRIERS, HAYBALES, SILTATION CURTAINS, TEMPORARY DETENTION DISTILLING BASINS, ETC.) TO ENSURE THE CONTROL OF STORMWATER RUNOFF. THIS PLAN DESCRIBES THE MINIMUM AMOUNT OF EROSION PROTECTION REQUIRED BY PROPOSED ACTIVITIES. IN THE EVENT OF UNFORSEEN EROSION, OTHER MEASURES OF EROSION CONTROL (EROSION CONTROL ACTIVITIES SUCH AS THOSE LISTED ABOVE) WILL BE REQUIRED.
3. TURBIDITY BARRIERS MUST BE INSTALLED AT ALL LOCATIONS WHERE THE POSSIBILITY OF TRANSFERRING SUSPENDED SOLIDS INTO THE RECEIVING WATERBODY EXISTS DUE TO THE PROPOSED WORK. TURBIDITY BARRIERS MUST REMAIN IN PLACE AT ALL LOCATIONS UNTIL CONSTRUCTION IS COMPLETED AND SOILS ARE STABILIZED AND VEGETATION HAS BEEN ESTABLISHED. THEREAFTER THE PERMITTEE WILL BE RESPONSIBLE FOR THE REMOVAL OF THE BARRIERS.
4. PERMANENT VEGETATIVE COVER MUST BE ESTABLISHED ON ALL EXPOSED LAND SURFACES WITHIN ONE YEAR FROM THE DATE THE CONSTRUCTION IS COMPLETE.
5. CONTRACTOR SHALL PLACE SILT FENCE ALONG PROPERTY LINE AROUND THE ENTIRE SITE PRIOR TO COMMENCEMENT OF CONSTRUCTION. SEE SHEETS C-12 AND C-13 FOR ADDITIONAL DETAILS ON EROSION CONTROL.

EX-TRENCH CALCULATIONS PRESUMPTIONS:

PRE-TREATMENT WILL BE PROVIDED TO THE FIRST 1.5 INCH RUN-OFF OF LOT AREA.

Ksat = 3.0 x 10-4 cfs/sf.

WATER CONTROL ELEVATION = 9.0'

PREVIOUS LAND USE ALLOCATION DATA:

DESCRIPTION	TOTAL S.F. (AC.)	TOTAL (%)
PARCEL "A" AREA	37,719 (0.87)	100
PAVEMENT / IMPERVIOUS AREA	30,994 (0.71)	82
LANDSCAPE / PERVIOUS AREA	6,725 (0.16)	18

PROPOSED LAND USE ALLOCATION DATA:

DESCRIPTION	TOTAL S.F. (AC.)	TOTAL (%)
PARCEL "A" AREA	37,719 (0.87)	100
BUILDING & DRIVE-THRU AREA	7,200 (0.17)	20
PAVEMENT & SIDEWALK AREAS	22,829 (0.52)	60
TOTAL IMPERVIOUS AREAS	30,029 (0.69)	79
LANDSCAPE / PERVIOUS AREA	7,690 (0.18)	21

NORTH

20' 0 20'
SCALE: 1"=20'

PROJECT SITE IS LOCATED ON FLOOD ZONE "X", FOR AREAS DETERMINED TO BE OUTSIDE 500-YEAR FLOODPLAIN, PER FEMA FIRM MAP NUMBER 12011C0355H, PANEL 355H, DATED AUGUST 18, 2014

REVISIONS | DATE

BB&T - COCONUT CREEK BRANCH
5700 COCONUT CREEK PARKWAY
MARGATE, FLORIDA 33063

BB&T

GRADING AND DRAINAGE PLAN

H & T CONSULTANTS, INC.
PLANNING – ENGINEERING
9310 OLD KINGS ROAD SOUTH, SUITE 1001
JACKSONVILLE , FLORIDA 32257
PHONE: 904-419-1001 FAX: 904-419-1004

JOB NO:
DRAWN: ALT
CHECK: SGH
DATE: OCT-31-14
PLATE
C-4
SHEET OF

LEGEND

SYMBOL	DESCRIPTION
	PROPOSED CONCRETE
	EXISTING PROPERTY LINE
	PROPOSED BUILDING LINE
	EXISTING EASEMENT
W W	EXISTING WATER LINE
W W	PROPOSED WATER LINE
FM FM	EXIST. SAN. FORCE MAIN LINE
FM FM	PROP. SAN. FORCE MAIN LINE
SAN SAN	PROP. SAN. GRAVITY LINE
OHE OHE	EXISTING ELECTRICAL UTILITY
BPC BPC	PROPOSED ELEC. LINE ROUTE
OR	EXISTING DRAINAGE INLET
	PROP. DRAINAGE INLET OR MH

UTILITY COMPANIES

WATER & SANITARY SEWER:
CITY OF MARGATE
DEPT. OF ENVIRONMENTAL & ENGINEERING SERVICES
CONTACT: KELLY McATEE, P.E.
(954) 972 – 0828
901 NW 66th AVENUE, SUITE A
MARGATE, FLORIDA 33063

STORM WATER:
SOUTH FLORIDA WATER MANAGEMENT DISTRICT
PHONE: 1–800–432–2045
3301 GUN CLUB ROAD,
WEST PALM BEACH, FL 33406

ELECTRIC:
FLORIDA POWER AND LIGHT CO.
CONTACT: BARRY THOMPSON
PHONE: (954) 956–2028
392 U.S. 17, EAST PALATKA, FL 32131

NOTE: GC SHALL FEILD VERIFY ALL EXISTING UTILITY AND STORM SEWER INVERT ELEVATIONS AND LOCATIONS, BEFORE COMMENCING WORK. GC SHALL NOTIFY THE ENGINEER OF ANY DISCREPANCIES.

NOTE: GC AND ELEC. SUB CONTRACTOR TO CONTACT & COORDINATE WITH THE CITY OF MARGATE UTILITIES DEPT. AND FPL PRIOR TO CONSTRUCTION.

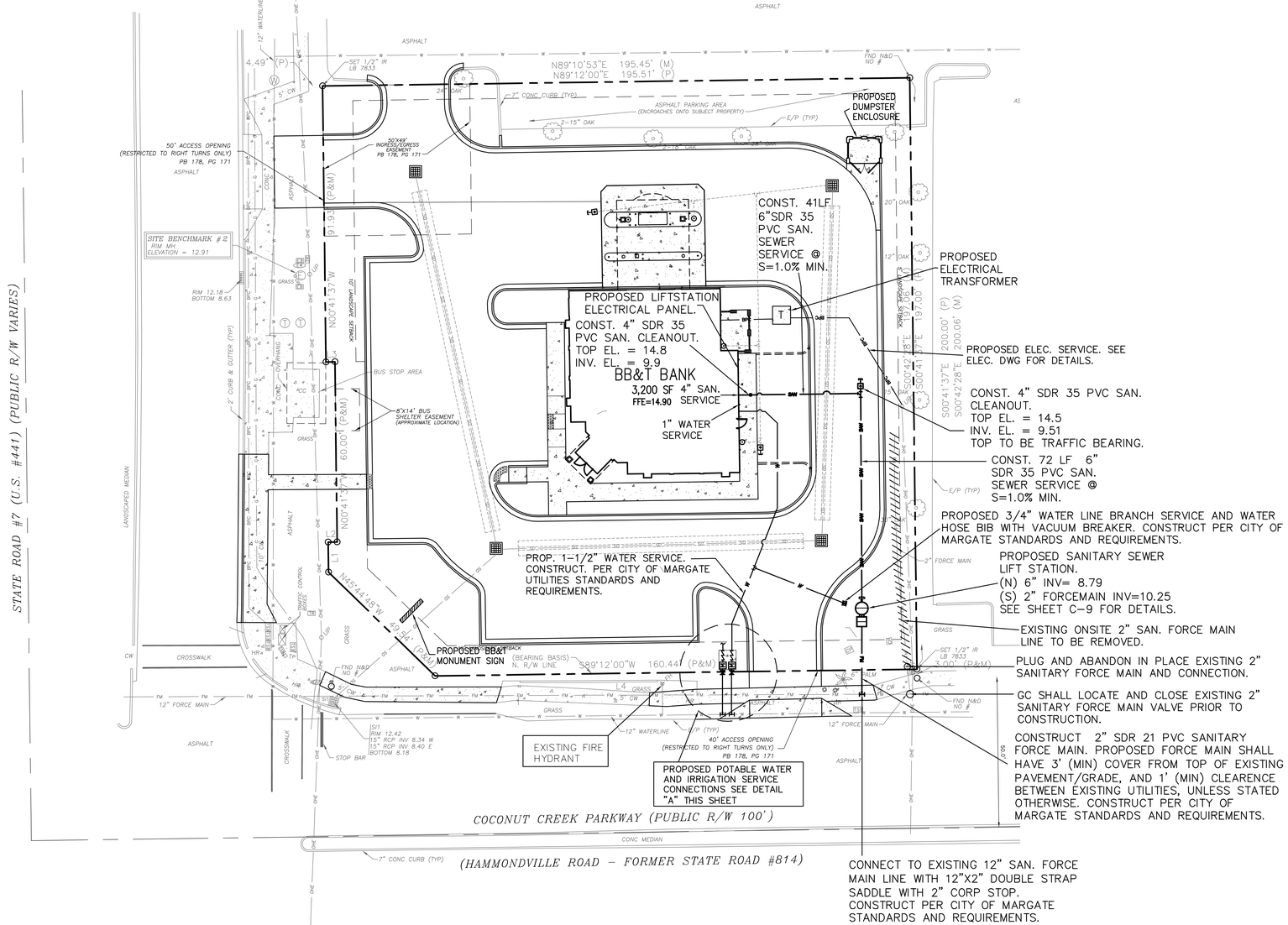

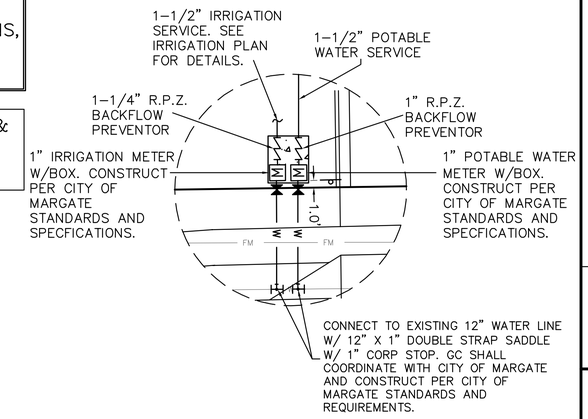

DETAIL "A"

NTS

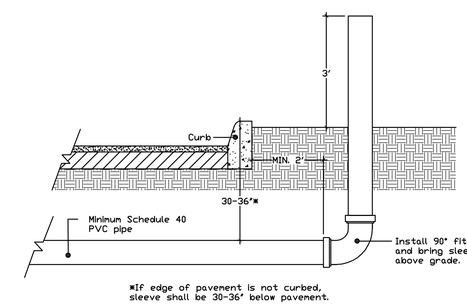

SLEEVE INSTALLATION DETAIL

SITE UTILITY NOTES:

1. CONTRACTOR TO COORDINATE LOCATIONS OF UNDERGROUND IRRIGATION SLEEVING PRIOR TO PAVING. SEE LANDSCAPE AND IRRIGATION PLANS.
2. CONTRACTOR TO SUPPLY AND INSTALL ALL TEMS AND PERFORM WORK NOT COVERED BY UTILITY COMPANIES, VERIFY INSTALLATION PROCESS AND REQUIREMENTS WITH UTILITY COMPANIES.
3. CONTRACTOR TO COORDINATE LOCATIONS OF UNDERGROUND CONDUIT FOR SITE LIGHTING PRIOR TO PAVING. SEE SITE LIGHTING PLANS.
4. CONTRACTOR TO CONTACT THE OPERATOR/CITY OF MARGATE UTILITIES (SANITARY & WATER) PRIOR TO CONSTRUCTION AND AGAIN PRIOR TO TYING NTO DISTRICT FACILITIES.
5. ALL UTILITY CONSTRUCTION AND MATERIALS SHALL BE IN ACCORDANCE WITH CITY OF MARGATE STANDARDS AND REQUIREMENTS.
6. ALL UTILITY CROSSINGS SHALL MAINTAIN A MIN. OF 12" CLEARENCE, CONSTRUCT PER THE CITY OF MARGATE UTILITIES SPECIFICATIONS AND REQUIREMENTS.

NOTE: FOR CITY OF MARGATE UTILITY DETAILS, NOTES, SPECIFICATIONS AND REQUIREMENTS SEE DETAIL SHEET C–8 AND 8A.

NORTH
N

20' 0 20'
SCALE: 1"=20'

REVISIONS | DATE

BB&T - COCONUT CREEK BRANCH
5700 COCONUT CREEK PARKWAY
MARGATE, FLORIDA 33063

BB&T

UTILITIES PLAN

H & T CONSULTANTS, INC.
PLANNING – ENGINEERING
9310 OLD KINGS ROAD SOUTH, SUITE 1001
JACKSONVILLE , FLORIDA 32257
PHONE: 904–419–1001 FAX: 904–419–1004

H&T

JOB NO:
DRAWN: ALT
CHECK: SGH
DATE: OCT 2014
PLATE
C-5
SHEET OF

LEGEND

SYMBOL	DESCRIPTION
DRIVE THRU OR DRIVE THRU	PROPOSED DRIVE THRU PAVEMENT MARKING.
	DIRECTIONAL ARROWS, TYP.
STOP	24" STOP BAR WITH TEXT
NP–FL	PROP. "NO PARKING – FIRE LANE"
	PROP. 4" DOUBLE YELLOW LINE (DYL) STRIPING PER COUNTY AND FDOT STANDARDS AND SPECS.

NOTE: SEE MARKING TYP. DETAILS ON THIS SHEET

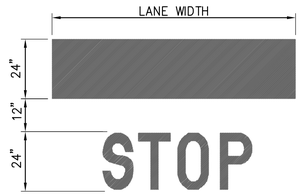

STOP BAR WITH TEXT
N.T.S.

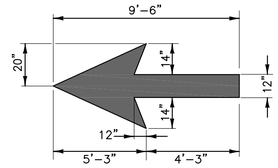

NOTE:
ALL PAVEMENT MARKINGS SHALL BE PAINTED TRAFFIC WHITE, UNLESS OTHERWISE NOTED.

DIRECTIONAL ARROW PAVEMENT MARKING DETAILS
N.T.S.

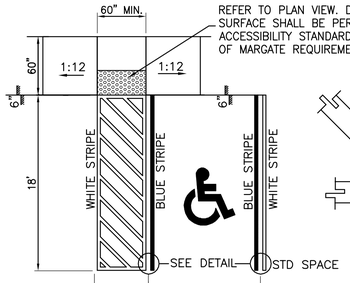

NOTE: SLOPE NOT TO EXCEED 2% IN ANY DIRECTION

H/C PARKING DETAIL
N.T.S.

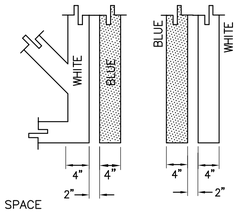

STRIPE DETAIL
N.T.S.

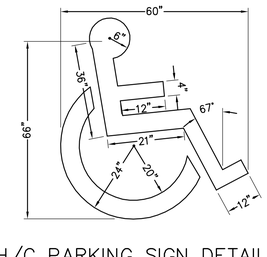

H/C PARKING SIGN DETAIL
N.T.S.

PAVEMENT MARKING NOTES:

1. PAINT COLOR TO BE "WHITE" FOR ARROW AND LETTERS. "DRIVE–THRU" LETTERS TO BE ELONGATED HELEVETICA MEDIUM – 4" WIDE STROKES.
2. ALL PAVEMENT MARKINGS EXCEPT PARKING STALLS SHALL BE ALKYD THERMOPLASTIC 90 MILS IN THICKNESS IN ACCORDANCE CITY OF MARGATE AND/OR FDOT STANDARDS.
3. PARKING STALLS SHALL BE PAINTED WITH WHITE LATEX TRAFFIC PAINT.
4. ALL PAVEMENT STRIPING SHALL BE IN ACCORDANCE WITH FDOT ROADWAY AND TRAFFIC DESIGN STANDARDS, INDEX NO. 17346 AND CITY OF MARGATE STANDARDS.
5. HANDICAP SYMBOL SHALL BE 4" WIDE THERMOPLASTIC BLUE TRAFFIC PAINT IN ACCORDANCE WITH FDOT INDEX NO. 17346. SEE DETAIL ON THIS SHEET.
6. HANDICAP PARKING STRIPES SHALL BE 6" WIDE THERMOPLASTIC TRAFFIC PAINT IN ACCORDANCE WITH FDOT INDEX NO. 17346
7. HANDICAP SIGNS SHALL BE INSTALLED PLUMB PER FLORIDA STATUTES. SEE DETAIL ON THIS SHEET.
8. STANDARD PARKING STALLS STRIPES SHALL BE 4" WIDE WHITE TRAFFIC LATEX PAINT IN ACCORDANCE WITH THE PAVEMENT MARKING LATEX PAINT NOTES ON THIS SHEET.
9. ALL REGULATORY SIGNS SHALL BE MADE OF HIGH INTENSITY REFLECTIVE MATERIAL, AS SPECIFIED IN THE LATEST EDITION OF THE MUTCD.
10. CROSSWALK SIDELINES SHALL USE THERMOPLASTIC PAINT STRIPING PER FDOT STANDARDS AND SPECIFICATIONS. SEE DETAIL ON THIS SHEET.
11. ALL SIGNS SHALL BE INSTALLED AT 7' FROM THE BOTTOM OF THE SIGN TO THE PAVEMENT SURFACE.
12. CONTRACTOR SHALL PROVIDE ALL PAVEMENT MARKINGS AND SITE SIGNAGE PER BB&T STANDARDS AND REQUIREMENTS.

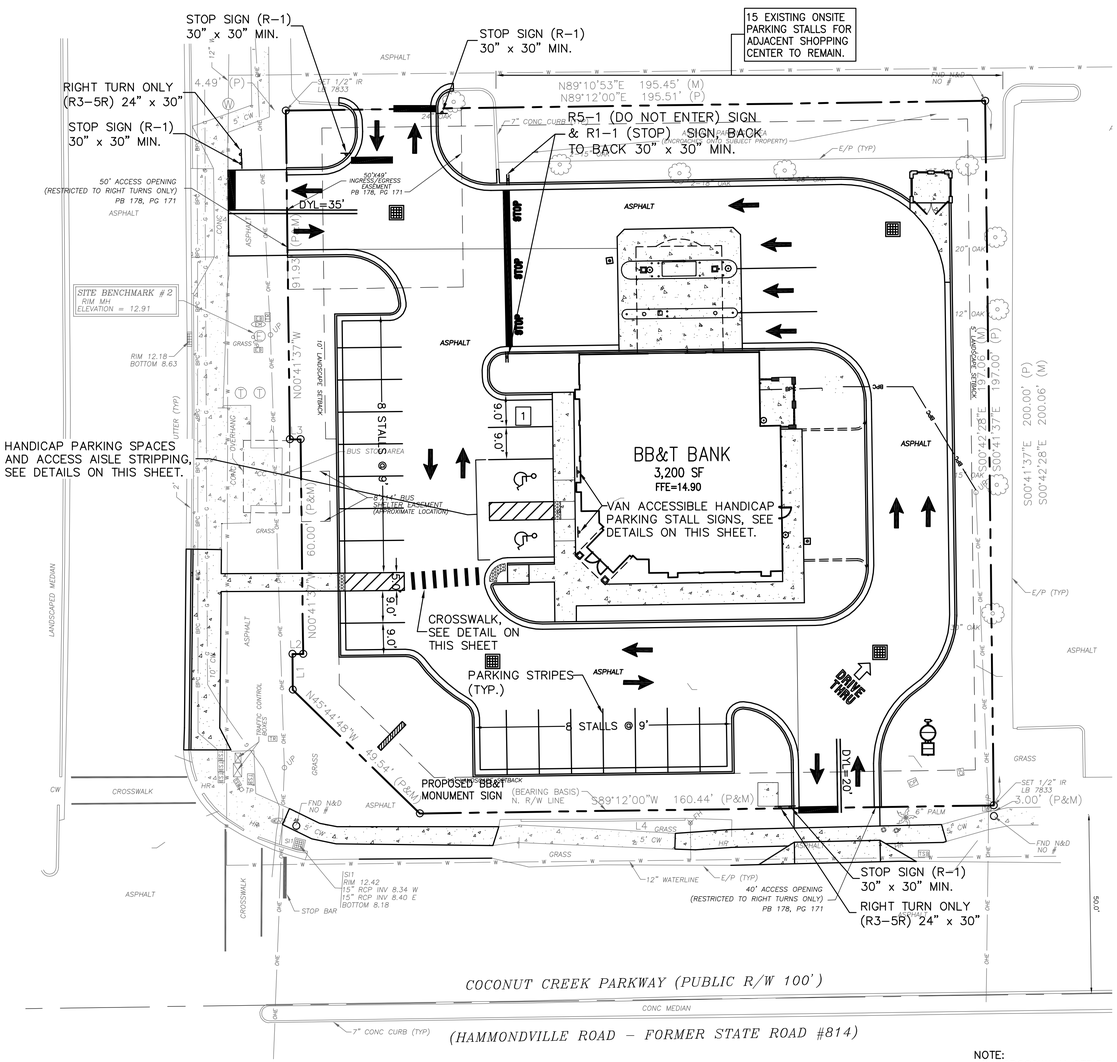

GENERAL NOTES:

1. ALL TRAFFIC CONTROL SIGNS WITHIN THE PROJECT SHALL BE MANUFACTURED USING DIAMOND GRADE REFLECTIVE SHEETING (OR AND EQUIVALENT). ALL SIGNS SHALL BE CONSTRUCTED IN ACCORDANCE WITH MUTCD CRITERIA FOR SIGN SIZE AND SHAPE AND LETTERING DIMENSIONS.
2. ALL TRAFFIC SIGN POSTS WITHIN THE PROJECT SHALL BE 2"X2" SQUARE BREAK–AWAY 14 GAUGE GALVANIZED STEEL WITH PUNCHED HOLES AND IN ACCORDANCE WITH CITY OF MARGATE STANDARDS & REQUIREMENTS

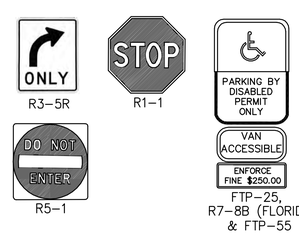

TYPICAL SIGN DETAILS
N.T.S.

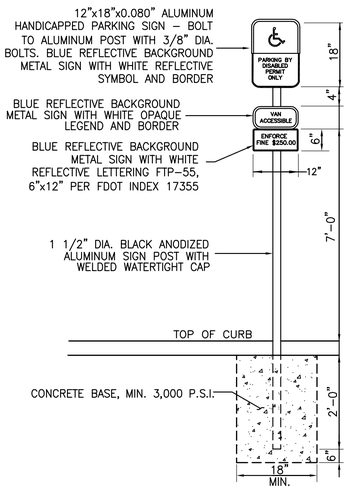

H/C TYPICAL SIGN DETAILS
N.T.S.

PAVEMENT MARKING LATEX PAINT NOTES:

A. All latex paint for pavement markings shall be: Latex, lead and chromate free, ready mixed, with drying time of less than 45 minutes.
   1. Basis–of–Design product: Subject to compliance with requirements, provide one of the following products:
      a. Duron Indistrial Coatings; "Dura Clad Lead Free Latex Zone Marking Paint" Applied at a dry film thickness of not less than 8.3 mils.
         1) Colors:
            a) White: #DU9948500
            b) Yellow: #DU1YZM100
      b. Sherwin–Williams Company (The); "Setfast Low VOC Acrilic Traffic Marking Paint" Applied at a dry film thickness of not less than 7.5 mils.
         1) Colors:
            a) White: #DU9948500
            b) Yellow: #DU1YZM100
B. Glass Beads: AASHTO M 247, Type 1 made of 100% recycled glass.
   1. Roundness: Minimum 75 percent true spheres by weight.

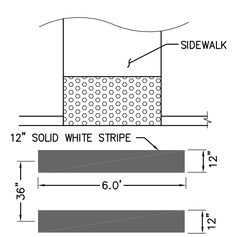

CROSSWALK DETAIL
NOT TO SCALE

NOTE:
ADA CROSSWALK STRIPING SHALL BE IN ACCORDANCE WITH THE CITY OF MARGATE STANDARDS AND REQUIREMENTS.

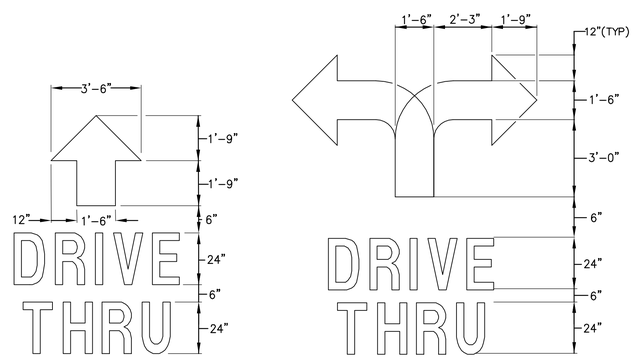

DRIVE–THRU PAVEMENT MARKING DETAILS
N.T.S.

NORTH

20' 0 20'
SCALE: 1"=20'

REVISIONS	DATE

BB&T - COCONUT CREEK BRANCH
5700 COCONUT CREEK PARKWAY
MARGATE, FLORIDA 33063

BB&T

SITE SIGNING AND MARKING PLAN

H & T CONSULTANTS, INC.
PLANNING – ENGINEERING
9310 OLD KINGS ROAD SOUTH, SUITE 1001
JACKSONVILLE , FLORIDA 32257
PHONE: 904–419–1001 FAX: 904–419–1004

H&T

JOB NO:
DRAWN: JR
CHECK: SGH
DATE: OCT 2014
PLATE
C-6
SHEET 6 OF

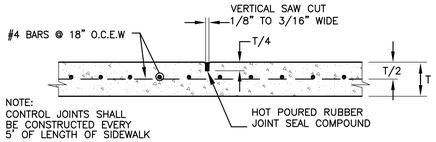

CONTROL JOINT

N.T.S.

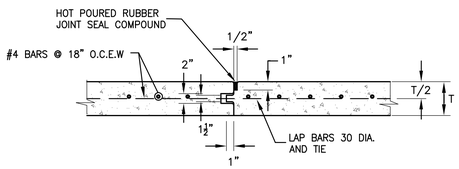

CONSTRUCTION JOINT

N.T.S.

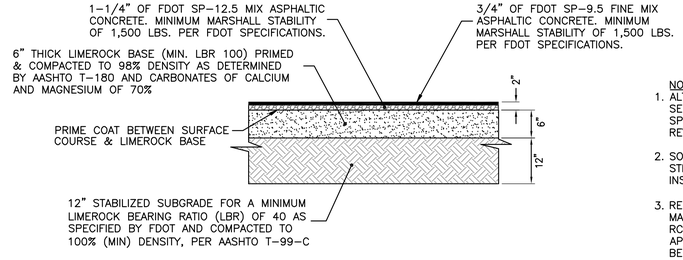

LIGHT DUTY ASPHALT PAVEMENT SECTION

NOT TO SCALE

NOTES:

1. ALTERNATE PAVEMENT AND BASE SECTION MEETING FDOT STANDARDS AND SPECS MAY BE SUBSTITUTED WITH REVIEW AND APPROVAL FROM ENGINEER.
2. SOIL-CEMENT BASE WITH A 7-DAY STRENGTH OF 300 PSI MAY BE USED INSTEAD OF THE LIMEROCK BASE.
3. RECYCLED CRUSHED CONCRETE (RCC) MAY BE USED AS AN ALTERNATIVE BASE. RCC SHALL BE SOURCED FROM AN APPROVED FDOT PROVIDER AND MUST BE COMPACTED TO AT LEAST 100% DENSITY WITH AN MIN. LBR OF 120.
4. REFER TO UNIVERSAL ENGINEERING SCIENCES REPORT ON SUBSOIL INVESTIGATION FOR ADDITIONAL INFORMATION AND RECOMMENDATIONS TO BE IMPLEMETED IN THE SUBSURFACE PREPARATION.

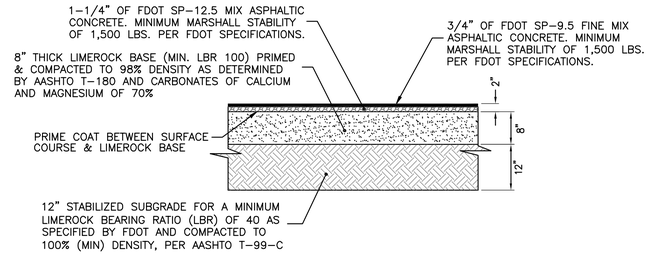

HEAVY DUTY ASPHALT PAVEMENT SECTION

NOT TO SCALE

NOTES:

*1. WHEN USED ON HIGH SIDE OF ROADWAYS, THE CROSS SLOPE OF THE GUTTER SHALL MATCH THE CROSS SLOPE OF THE ADJACENT PAVEMENT. THE THICKNESS OF THE LIP SHALL BE 6", UNLESS OTHERWISE SHOWN ON PLANS.

2. EXPANSION JOINT, PREFORMED JOINT FILLER AND JOINT SEAL ARE REQUIRED BETWEEN CURB & GUTTER AND CONCRETE PAVEMENT ONLY, SEE DETAIL ON THIS SHEET.

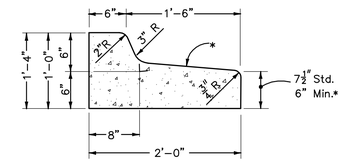

TYPE F SPILLOUT CURB

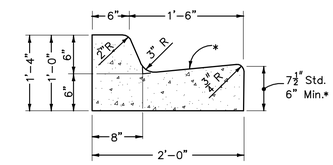

TYPE F

CONCRETE CURB AND GUTTER

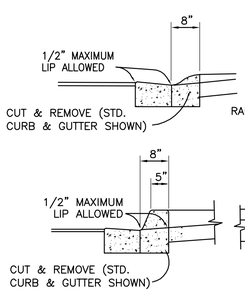

SECTION C – C

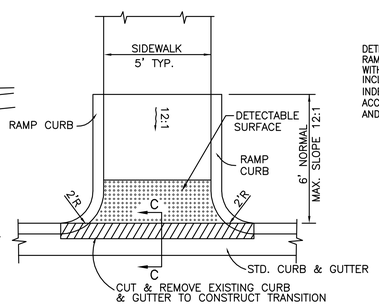

PLAN VIEW

N.T.S.

DETECTABLE WARNINGS IN CURB RAMPS/CROSSWALKS SHALL COMPLY WITH ALL ADA REQUIREMENTS INCLUDING 4.7.7 / 4.29 AND FDOT INDEX NO. 304 AND FLORIDA ACCESSIBILITY CODE STANDARDS AND REQUIREMENTS

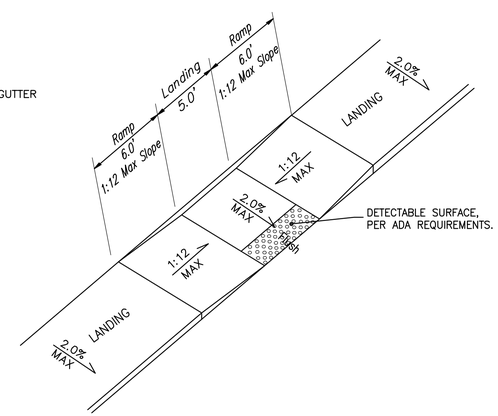

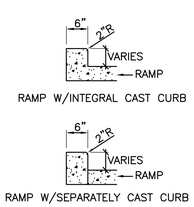

RAMP CURB OPTIONS

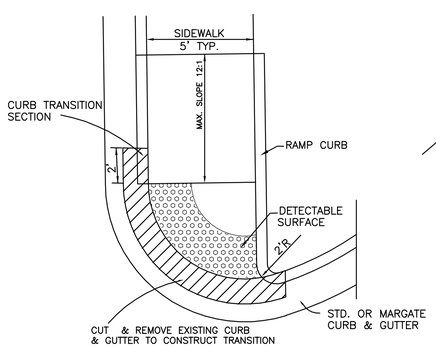

PLAN VIEW

N.T.S.

ADA RAMPS DETAILS

N.T.S.

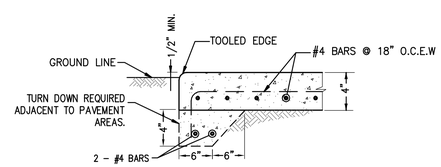

SECTION AT TURN DOWN

NOTES:

1. AN EXPANSION JOINT SHALL BE USED TO SEPARATE THE NEW CONCRETE SIDEWALK FROM OTHER NEW OR EXISTING CONSTRUCTION.
2. CONTROL JOINTS SHALL BE CONSTRUCTED EVERY 5' OF LENGTH OF SIDEWALK.
3. THE CONCRETE AROUND THE BICYCLE RACK SHALL BE CONSTRUCTED TO THE SAME SPECIFICATIONS AS THE SIDEWALK ADJOINING IT.
4. ALL SIDEWALK CONCRETE SHALL BE MIXED WITH FIBER MESH ADDITIVE (MIN. 1.5 lbs PER CUBIC YARD)
5. REFER TO UNIVERSAL ENGINEERING SCIENCES REPORT ON SUBSOIL INVESTIGATION FOR ADDITIONAL INFORMATION AND RECOMMENDATIONS TO BE IMPLEMETED IN THE SUBSURFACE PREPARATION.

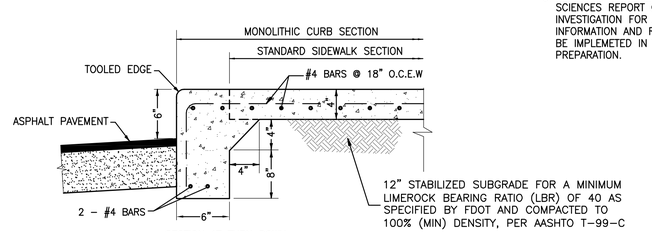

SECTION AT TURN DOWN
(WALK ABUTTING PAVEMENT)

TYPICAL TURN-DOWN SIDEWALK DETAILS

N.T.S.

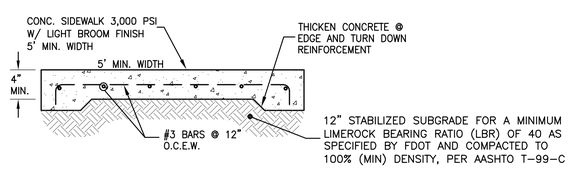

TYPICAL SIDEWALK DETAIL

N.T.S.

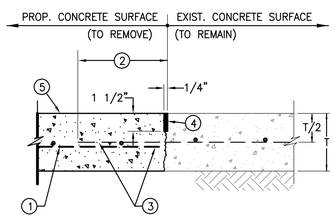

CONCRETE TO CONCRETE STANDARD TIE-IN DETAIL

N.T.S. (SEE NOTES)

1. REINFORCING CENTERED IN PROPOSED PAVEMENT, 3" CLEAR AT EDGES.
2. SAW-CUT & REMOVE EXISTING CONCRETE OR PAVEMENT WITH CURB TO EXPOSE AND CLEAN REQUIRED REINFORCING STEEL, 12" MINIMUM.
3. 24 BAR DIAMETER LAP OR WELD, AS DIRECTED BY ENGINEER.
4. HOT POURED RUBBER JOINT SEAL COMPOUND
5. CONCRETE SURFACE TO MEET AND MATCH EXISTING.

REVISIONS	DATE

BB&T - COCONUT CREEK BRANCH

5700 COCONUT CREEK PARKWAY
MARGATE, FLORIDA 33063

SITE DETAILS

H & T CONSULTANTS, INC.
PLANNING – ENGINEERING
9310 OLD KINGS ROAD SOUTH, SUITE 1001
JACKSONVILLE , FLORIDA 32257
PHONE: 904-419-1001 FAX: 904-419-1004

JOB NO:

DRAWN: JRT

CHECK: LT

DATE: MAY-27-14

PLATE

C-7

SHEET 7 OF 11

GENERAL NOTES

1. ALL CONSTRUCTION AND MATERIALS TO BE IN ACCORDANCE WITH THE CITY OF MARGATE, WATER AND WASTE WATER SPECIFICATIONS.
2. P.V.C. WATER MAIN TO BE 1120 S.D.R. 18 CONFORMING TO A.N.S.I. / A.W.W.A. C-900-07 WITH A MINIMUM COVER OF 36". D.I.P. WATER MAIN SHOULD BE MINIMUM CLASS 50

*TESTING / WATER MAIN

WATER MAINS SHALL BE TESTED IN ACCORDANCE WITH A.N.S.I. / A.W.W.A. STANDARDS C-600-05

1. HYDROSTATIC TESTS SHALL BE CONDUCTED AS FOLLOWS: AFTER A NEW PRESSURE MAIN HAS BEEN LAID AND BACKFILLED, IT SHALL BE PUMPED TO A PRESSURE OF 150 P.S.I. AND SHALL NOT VERY BY MORE THAN ±5 P.S.I. FOR THE DURATION OF THE TEST. ALL VISIBLE LEAKS SHALL BE STOPPED BY APPROVED METHODS.

   A LEAKAGE TEST SHALL THEN BE CONDUCTED AT THE ABOVE MENTIONED PRESSURE AND NO INSTALLATION WILL BE ACCEPTABLE BY THE ENGINEER UNTIL THE LEAKAGE IS LESS THAN THE NUMBER OF GALLONS PER HOUR AS DETERMINED BY THE FOLLOWING FORMULA:

   $Q = \frac{LD\sqrt{P}}{148,000}$ A.N.S.I./ A.W.W.A. C600 – 05 STANDARDS

   IN WHICH Q EQUAL THE ALLOWABLE LEAKAGE IN GALLONS PER HOUR: L = LENGTH OF LINES IN FEET: D = DIAMETER OF LINES IN INCHES: AND P IS THE AVERAGE TEST PRESSURE DURING THE LEAKAGE TEST, IN POUNDS PER SQUARE INCH. THE TEST SHALL BE MAINTAINED FOR A TWO (2) HOUR DURATION, BUT IT MAY BE CONTINUED FOR ONE (1) ADDITIONAL HOUR IF IT BECOMES APPARENT THAT THE LEAKAGE IS EQUAL TO OR GREATER THAN THE AMOUNT ALLOWABLE. WATER SUPPLIED TO THE MAIN DURING THE TEST TO MAINTAIN THE REQUIRED PRESSURE SHALL BE MEASURED BY A 5/8 INCH METER INSTALLED. ON THE DISCHARGE SIDE OF THE TEST PUMP, OR BY PUMPING FROM A CALIBRATED CONTAINER. A HOSE BIBB CONNECTION WILL BE PROVIDED TO ACCEPT THE TEST GAUGE SUPPLIED BY THE CITY OF MARGATE. THE SECTION OF THE MAIN BEING TESTED SHALL BE LIMITED TO A MAXIMUM LENGTH OF 2000 FEET, OR THE DISTANCE BETWEEN THE TWO (2) CLOSEST VALVES. WHICHEVER IS GREATER. WHEN TESTING AGAINST CLOSED METAL-SEATED VALVES, AND ADDITIONAL LEAKAGE PER CLOSED VALVE OF 0.00078 GAL/HR/IN OF NOMINAL VALVE SIZE SHALL BE ALLOWED. ANY QUESTIONS PERTAINING TO PROCEDURES USED DURING THE TEST SHALL BE DIRECTED BY THE ENGINEER.
2. STERILIZATION SHALL BE PERFORMED AFTER THE WATER MAINS HAVE SATISFIED THE LEAKAGE REQUIREMENTS. THE WATER MAINS SHALL BE FLUSHED THROUGH OPENINGS OF THE REQUIRED SIZE AS DETAILED IN A.N.S.I. / A.W.W.A. STANDARD C-651-05. THE MAIN SHALL THEN BE STERILIZED IN ACCORDANCE WITH THE PROVISIONS OF THE APPLICABLE SECTIONS OF THE ABOVE NAMED SPECIFICATIONS, ON MAIN BREAKS, CUT-INS, ETC. A LIBERAL APPLICATION OF CALCIUM HYPROCHLORITE SHALL BE MADE.

   MAINS SHALL NOT BE PUT INTO DOMESTIC SERVICE UNTIL AFTER THE NECESSARY BACTERIOLOGICAL SAMPLES HAVE BEEN APPROVED BY THE APPLICABLE REGULATORY AGENCIES.

TESTING / WATER SERVICE

1. HYDROSTATIC TESTING: HYDROSTATIC TESTING OF WATER SERVICE LINES SHALL BE DONE IN CONJUNCTION WITH THE TESTING OF THE LATERAL OR MAIN LINE. NO ADDITIONAL LEAKAGE ALLOWANCE WILL BE MADE FOR SERVICE LINES.
2. STERILIZATION: STERILIZATION OF SERVICE LINES SHALL BE DONE IN CONJUNCTION WITH THE STERILIZATION OF THE LATERAL OR THE MAIN LINE. SUFFICIENT SAMPLING POINTS SHALL BE TAKEN FROM SERVICE LINE CONNECTIONS TO ASSURE UNIFORM RESULTS THROUGHOUT THE SYSTEM BEING TESTED.

   ALL FIRE LINES TO BE INSTALLED AND TESTED PER N.F.P.A. 24 CODE. CONTRACTOR TO TAKE NOTE THAT PRESSURE TEST ON THIS LINE WILL BE AT 250 P.S.I., AND PIPE AND VALVES SHOULD MEET THIS REQUIREMENT.

DRAWN BY: JJW | SCALE: NONE
APPROVED BY: | REV. FEB. 2002

*THESE NOTES SHALL BE UPDATED ACCORDANCE TO AWWA

CITY OF MARGATE — DEPT. OF ENVIRONMENTAL & ENGINEERING SERVICES | STANDARD WATER AND SEWER DETAILS — GENERAL NOTES | SD-31a

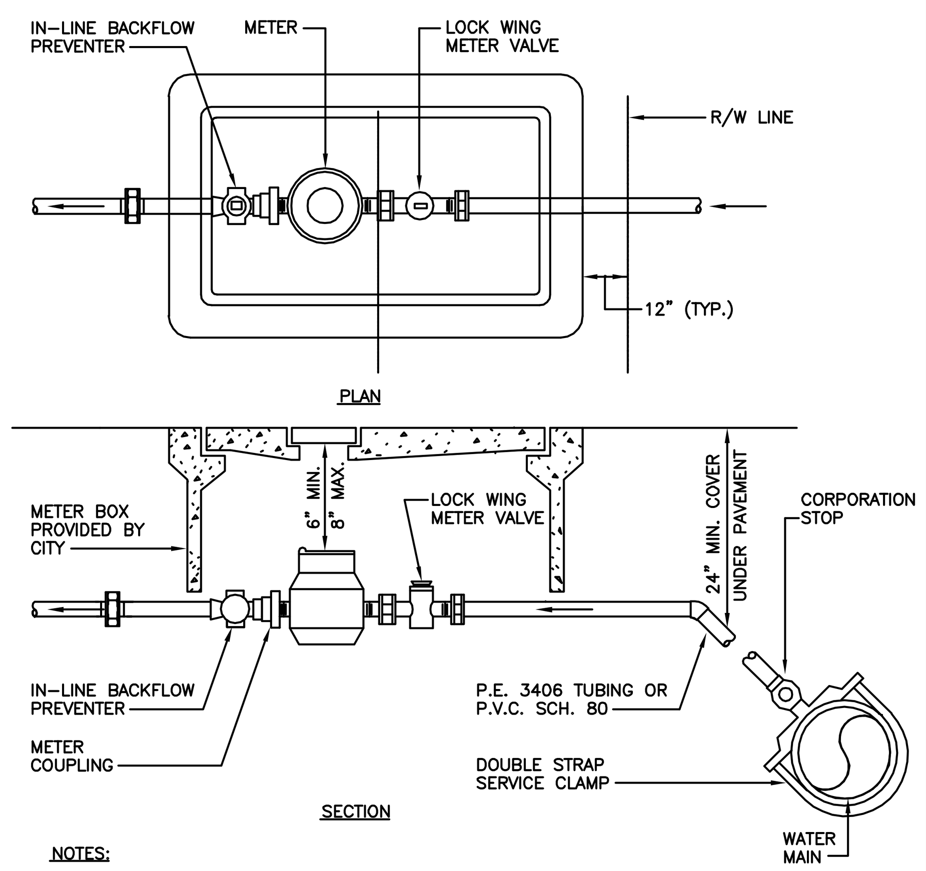

NOTES:

1. LOCATE BOX 12" OUTSIDE OF STREET R/W LINE.
2. CITY RESPONSIBILITY ENDS AT CUSTOMER SIDE OF METER.
3. METERS UP TO 2" SHALL BE FURNISHED AND INSTALLED BY CITY. (ALL OTHER WORK BY CUSTOMER)
4. MINIMUM RADIUS OF TUBING CURVE SHALL BE 14".

DRAWN BY: JJW | SCALE: NONE
APPROVED BY: | REV. FEB. 2002

CITY OF MARGATE — DEPT. OF ENVIRONMENTAL & ENGINEERING SERVICES | STANDARD WATER AND SEWER DETAILS — METER INSTALLATION FOR UP TO 1" METER | SD-2

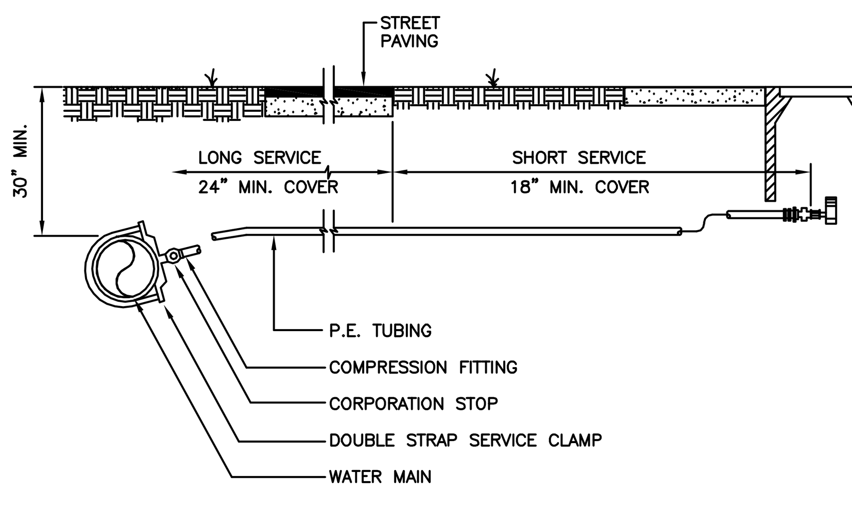

NOTES:

1. SUCCESSIVE TAPS INTO THE WATER MAIN SHALL BE SPACED NOT LESS THAN 18" ON CENTER.
2. ALL TAPS INTO WATER MAINS REQUIRE A SERVICE CLAMP.
3. SERVICE PIPE SHALL BE SAME SIZE AS THE WATER METER USED EXEPT THAT NO SERVICE PIPE SHALL BE SMALLER THAN 1".
4. APPROVED TYPE COPPER TUBING MAY BE USED IN PLACE OF PLASTIC.
5. FOR 1" SERVICE LINES, THE MINIMUM RADIUS SHALL BE 14" FOR 1 1/2" OR 2" SERVICE LINES, THE MINIMUM RADIUS SHALL BE 21"

DRAWN BY: JJW | SCALE: NONE
APPROVED BY: | REV. FEB. 2002

CITY OF MARGATE — DEPT. OF ENVIRONMENTAL & ENGINEERING SERVICES | STANDARD WATER AND SEWER DETAILS — WATER SERVICE CONNECTION | SD-1

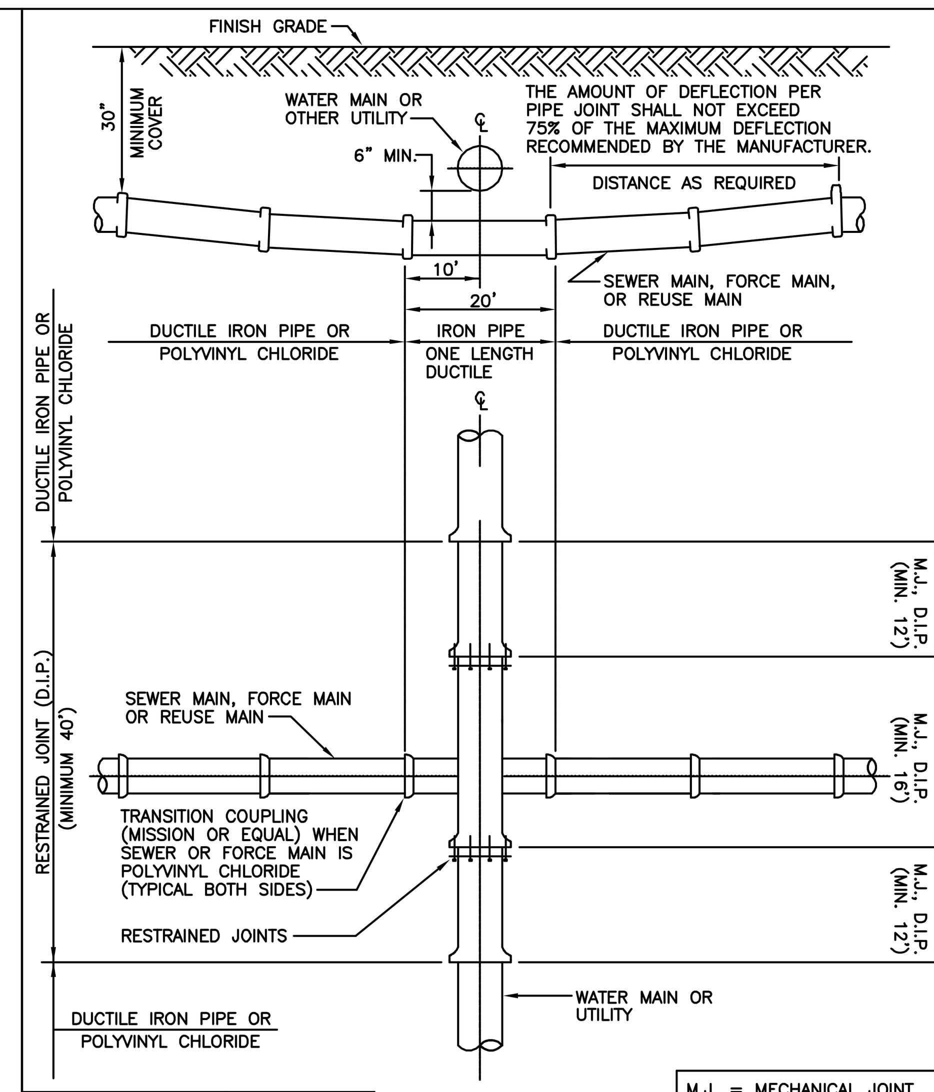

DRAWN BY: JJW | SCALE: NONE
APPROVED BY: | REV. FEB. 2002

CITY OF MARGATE — DEPT. OF ENVIRONMENTAL & ENGINEERING SERVICES | STANDARD WATER AND SEWER DETAILS — STANDARD UTILITY CROSSING | SD-21a

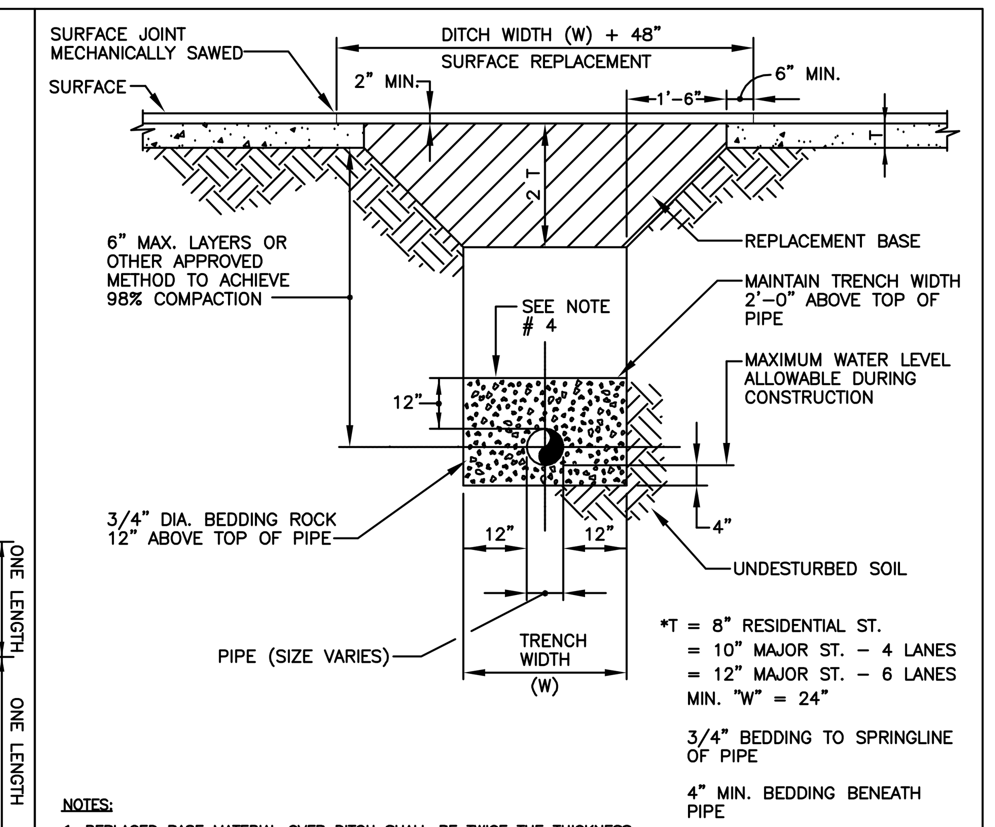

*T = 8" RESIDENTIAL ST.
= 10" MAJOR ST. – 4 LANES
= 12" MAJOR ST. – 6 LANES
MIN. "W" = 24"

3/4" BEDDING TO SPRINGLINE OF PIPE

4" MIN. BEDDING BENEATH PIPE

NOTES:

1. REPLACED BASE MATERIAL OVER DITCH SHALL BE TWICE THE THICKNESS OF THE ORIGINAL BASE, BUT NO LESS THAN "T" SCHEDULE.
2. BASE MATERIAL SHALL BE PLACED IN TWO OR THREE LAYERS AND EACH LAYER THOROUGHLY ROLLED AND TAMPED TO MAXIMUM DENSITY (98%).
3. ASPHALT CONCRETE PAVEMENT JOINTS SHALL BE MECHANICALLY SAWED.
4. MECHANICAL COMPACTION IS NOT ALLOWED BELOW THIS LEVEL.
5. NEW SURFACE MATERIALS WILL BE CONSISTANT WITH THE EXISTING SURFACE, AND SHALL HAVE LAPPED AND FEATHERED JOINTS.
6. PERMIT REQUIRED FROM ENGINEERING TO CUT PAVEMENT.
7. IF DITCH IS FILLED TEMPORARILY IT SHALL BE COVERED WITH A 2" ASPHALTIC CONC. PATCH UNTIL REPLACED WITH A PERMANENT PATCH.

TRENCH DETAIL (PAVED AREAS)

DRAWN BY: JJW | SCALE: NONE
APPROVED BY: | REV. JAN. 2010

CITY OF MARGATE — DEPT. OF ENVIRONMENTAL & ENGINEERING SERVICES | STANDARD DETAILS — TRENCH DETAIL | SD-28

NOTES ON WATER – SEWER SEPARATION:

1. SANITARY SEWERS AND FORCE MAINS SHOULD CROSS UNDER WATER MAINS WHENEVER POSSIBLE. SANITARY SEWERS AND FORCE MAINS CROSSING WATER MAINS SHALL BE LAID TO PROVIDE A MINIMUM VERTICAL DISTANCE OF 18 INCHES BETWEEN THE INVERT OF THE UPPER PIPE AND THE CROWN OF THE LOWER PIPE WHENEVER POSSIBLE.
2. WHERE SANITARY SEWERS OR FORCE MAINS MUST CROSS A WATER MAIN WITH LESS THAN 18 INCHES VERTICAL DISTANCE, BOTH THE SEWER AND THE WATER MAIN SHALL BE CONSTRUCTED OF DUCTILE IRON PIPE (D.I.P.) AT THE CROSSING. SUFFICIENT LENGTHS OF D.I.P. MUST BE USED TO PROVIDE A MINIMUM SEPARATION OF 10 FEET BETWEEN TWO JOINTS. ALL JOINTS ON THE WATER MAIN WITHIN 20 FEET OF THE CROSSING MUST BE MECHANICALLY RESTRAINED. A MINIMUM VERTICAL CLEARANCE OF 6 INCHES MUST BE MAINTAINED AT ALL CROSSING.
3. ALL CROSSINGS SHALL BE ARRANGED SO THAT THE SEWER PIPE JOINTS AND THE WATER MAIN PIPE JOINTS ARE EQUIDISTANT FROM THE POINT OF CROSSING (PIPES CENTERED ON CROSSING).
4. WHERE A NEW PIPE CONFLICTS WITH AN EXISTING PIPE WITH LESS THAN 18 INCHES VERTICAL CLEARANCE, THE NEW PIPE SHALL BE ARRANGED TO MEET THE CROSSING REQUIREMENTS ABOVE.
5. A MINIMUM 10 FOOT HORIZONTAL SEPARATION SHALL BE MAINTAINED BETWEEN ANY TYPE OF SEWER AND WATER MAIN PARALLEL INSTALLATIONS WHENEVER POSSIBLE.
6. IN CASES WHERE IT IS NOT POSSIBLE TO MAINTAIN A 10 FOOT HORIZONTAL SEPARATION, THE WATER MAIN MUST BE LAID IN A SEPARATE TRENCH OR ON AN UNDISTURBED EARTH SHELF LOCATED ON ONE SIDE OF THE SEWER OR FORCE MAIN AT SUCH AN ELEVATION THAT THE BOTTOM OF THE WATER MAIN IS AT LEAST 18 INCHES ABOVE THE TOP OF THE SEWER.
7. WHERE IT IS NOT POSSIBLE TO MAINTAIN A VERTICAL DISTANCE OF 18 INCHES IN PARALLEL INSTALLATIONS, THE WATER MAIN SHALL BE CONSTRUCTED OF D.I.P. AND THE SANITARY SEWER OR THE FORCE MAIN SHALL BE CONSTRUCTED OF D.I.P. WITH A MINIMUM VERTICAL DISTANCE OF 6 INCHES. THE WATER MAIN SHOULD ALWAYS BE ABOVE THE SEWER. JOINTS ON THE WATER SHALL BE LOCATED AS FAR APART AS POSSIBLE FROM JOINTS ON THE SEWER OR FORCE MAIN (STAGGERED JOINTS).
8. ALL D.I.P. SHALL BE CLASS 50 OR HIGHER, ADEQUATE PROTECTIVE MEASURES AGAINST CORROSION SHALL BE USED AS DETERMINED BY THE DESIGN.

DRAWN BY: JJW | SCALE: NONE
APPROVED BY: | REV. FEB. 2002

CITY OF MARGATE — DEPT. OF ENVIRONMENTAL & ENGINEERING SERVICES | STANDARD WATER AND SEWER DETAILS — GENERAL NOTES | SD-31b

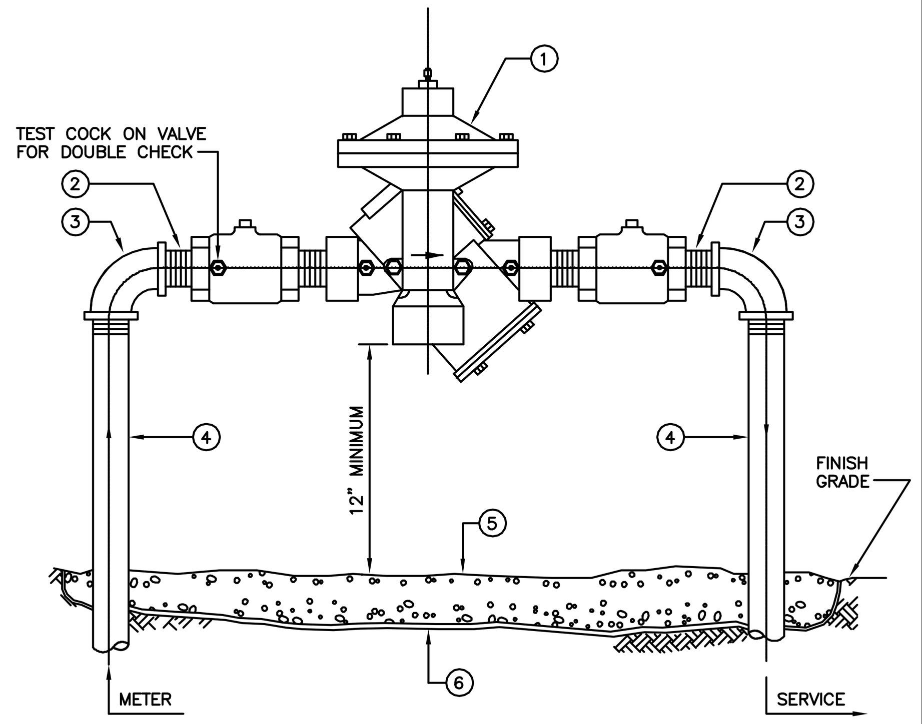

MATERIALS

ITEM	QUANTITY	DESCRIPTION
1	1	BACKFLOW PREVENTER ASSEMBLY
2	2	1" x NOM. – NIPPLES (BRASS OR COPPER)
3	2	1" x 90° – ELBOWS (BRASS OR COPPER)
4	*	1" x VARIES – RISER (BRASS OR COPPER)
5	*	PEA GRAVEL
6	*	PLASTIC LINER

NOTE: * INSTALL UNION(S) TO FACILITATE REMOVAL/INSTALLATION. (INSTALLATION SHOWN ABOVE IS FOR A 1" SERVICE.)

DRAWN BY: JJW | SCALE: NONE
APPROVED BY: | REV. FEB. 2002

CITY OF MARGATE — DEPT. OF ENVIRONMENTAL & ENGINEERING SERVICES | STANDARD WATER AND SEWER DETAILS — BACKFLOW PREVENTER FOR SERVICE SIZE 1" | SD-9

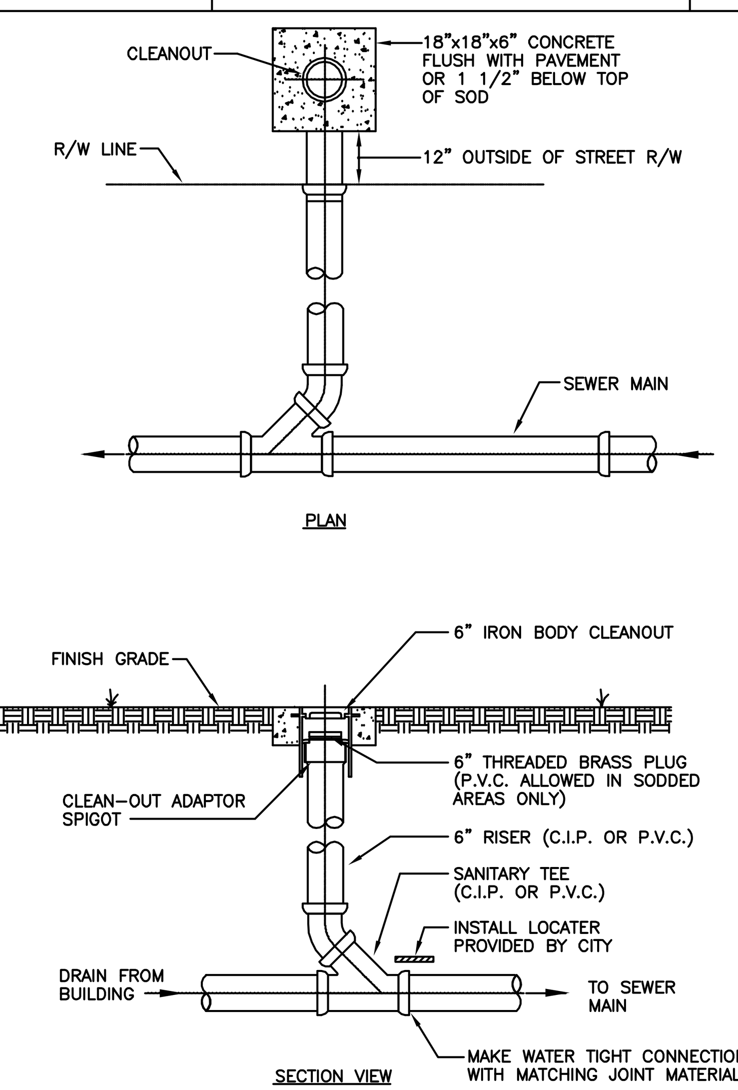

DRAWN BY: JJW | SCALE: NONE
APPROVED BY: | REV. FEB. 2002

CITY OF MARGATE — DEPT. OF ENVIRONMENTAL & ENGINEERING SERVICES | STANDARD WATER AND SEWER DETAILS — BUILDING CONNECTION DETAIL | SD-13

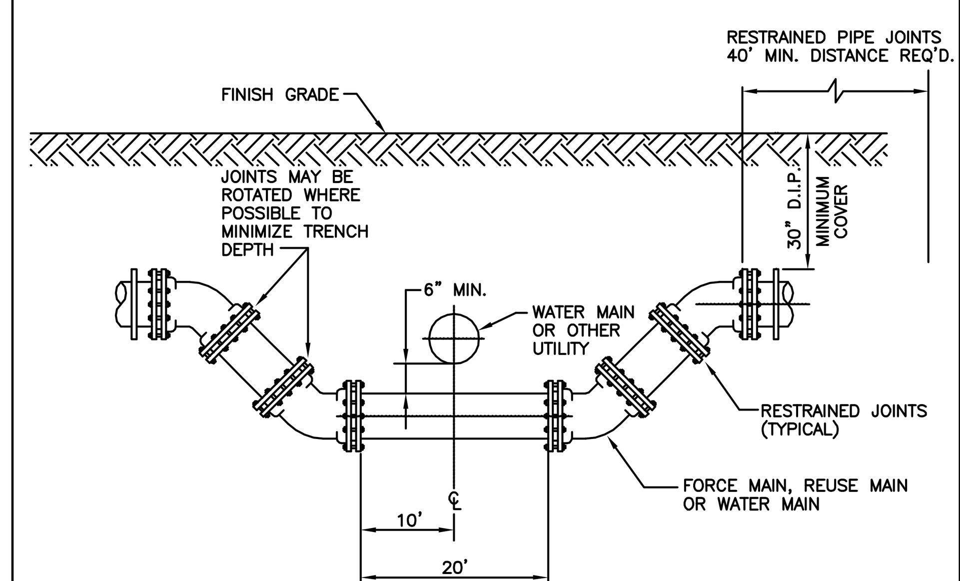

NOTE:
WHEREVER POSSIBLE DEFLECTION OF THE PIPE WILL BE USED TO AVOID EXISTING OBSTRUCTIONS. THIS CROSSING SHALL BE USED ONLY WHEN ORDERED BY THE ENGINEER.

DRAWN BY: JJW | SCALE: NONE
APPROVED BY: | REV. FEB. 2002

CITY OF MARGATE — DEPT. OF ENVIRONMENTAL & ENGINEERING SERVICES | STANDARD WATER AND SEWER DETAILS — SPECIAL UTILITY CROSSING | SD-21

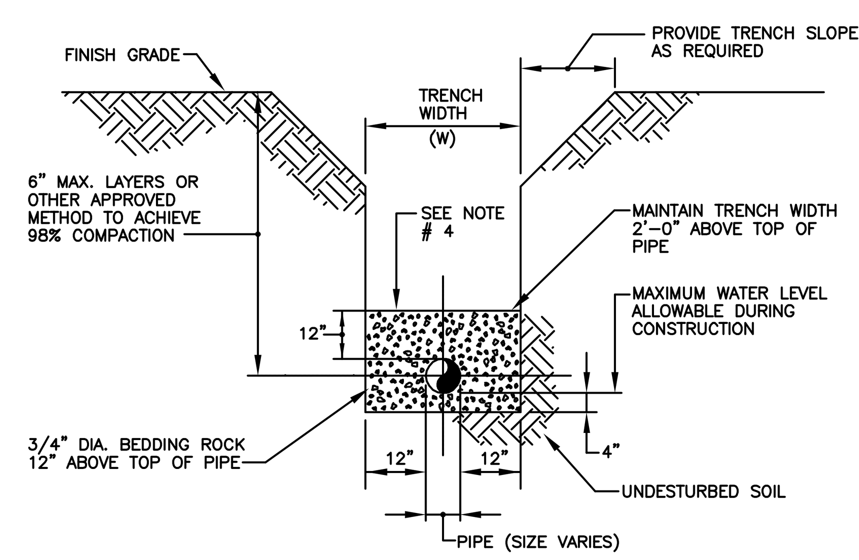

NOTES:

1. WHERE SOIL CONDITIONS CAN NOT BE MAINTAINED AS SHOWN ABOVE, PROVIDE APPROVED METHOD OF CONSTRUCTION.
2. SHEETING WILL BE REQUIRED AS DETERMINED IN THE FIELD.
3. COMPACTION PERCENTAGES SHOWN REFER TO ASSHO T-180.
4. MECHANICAL COMPACTION NOT ALLOWED BELOW THIS LEVEL.

TRENCH DETAIL (UNPAVED AREAS)

DRAWN BY: JJW | SCALE: NONE
APPROVED BY: | REV. JAN. 2010

CITY OF MARGATE — DEPT. OF ENVIRONMENTAL & ENGINEERING SERVICES | STANDARD DETAILS — TRENCH DETAIL (UNPAVED AREAS) | SD-29

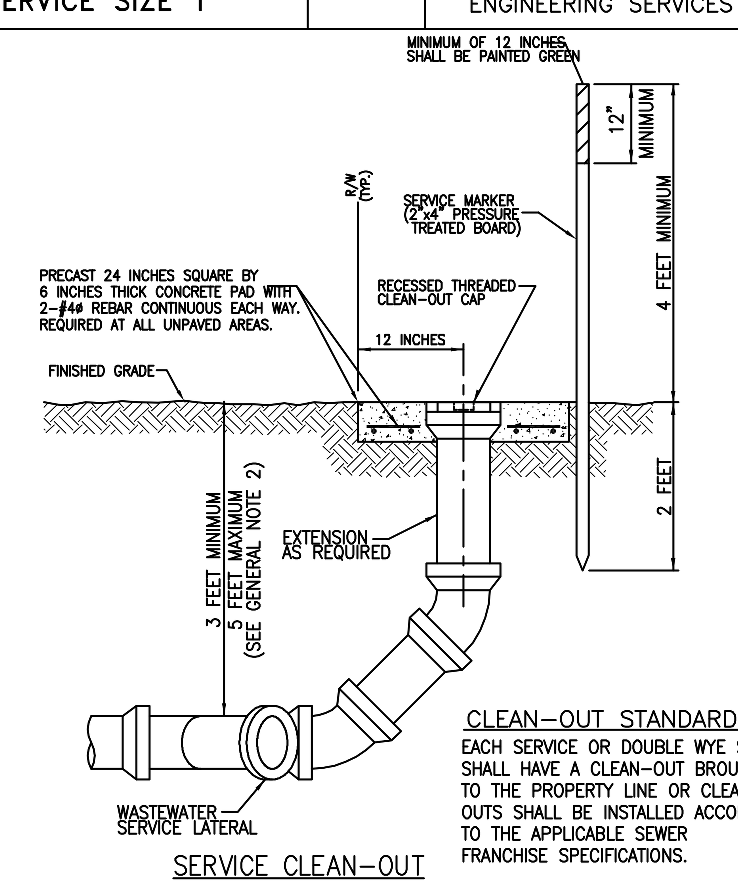

SERVICE CLEAN-OUT

GENERAL NOTES:

1. LOCATION OF CLEAN-OUT TO BE MARKED AT CURB OR EDGE OF ASPHALT WITH BRASS DISC WITH NUMBER OF FEET. REFER TO THE GENERAL SECTION, 6.15.1 FOR SPECIFICATIONS ON DISC IN UNIFORM WATER, WASTEWATER AND REUSE SYSTEM CODE.
2. THE WASTEWATER SERVICE LATERAL SHALL NOT BE DEEPER THAN 5 FEET FROM FINISHED (FINAL) GRADE, TOP BACK OF CURB, OR EDGE OF PAVEMENT.
3. WHEN THE WASTEWATER SERVICE LATERAL CLEANOUT IS IN PAVED AREAS (CONCRETE OR ASPHALT) A POURED IN PLACE CONCRETE PAD AND VALVE BOX AND COVER SHALL BE USED AS SHOWN IN SEWER DRAWING DETAIL NO. 10.

CLEAN-OUT STANDARDS

EACH SERVICE OR DOUBLE WYE SERVICE SHALL HAVE A CLEAN-OUT BROUGHT TO THE PROPERTY LINE OR CLEAN-OUTS SHALL BE INSTALLED ACCORDING TO THE APPLICABLE SEWER FRANCHISE SPECIFICATIONS.

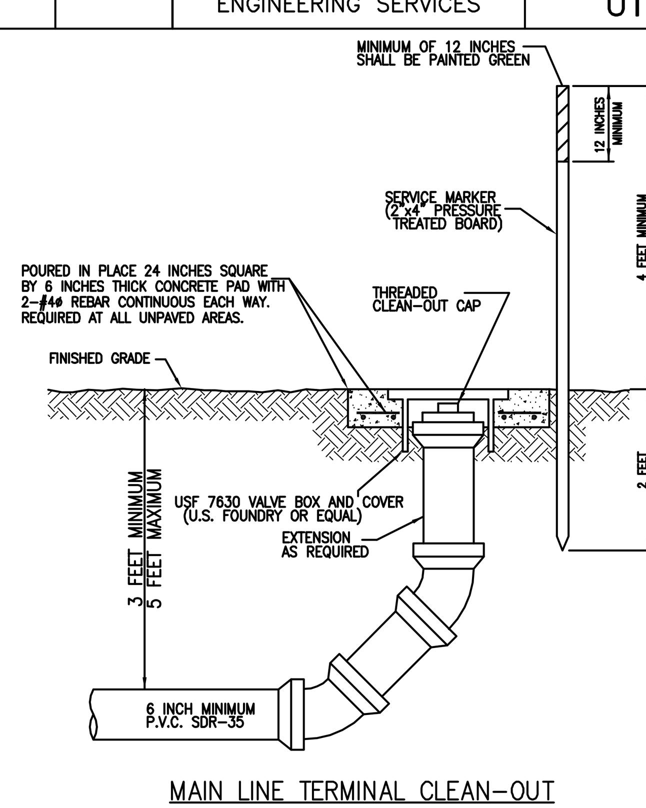

MAIN LINE TERMINAL CLEAN-OUT
N.T.S.

NOTE: CONTRACTOR SHALL COORDINATE WITH THE CITY OF MARGATE UTILITY DISTRICT OPERATOR AND CONSTRUCT ALL WATER AND SANITARY SEWER UTILITIES IN ACCORDANCE WITH THE LASTEST STANDARDS, DETAILS, SPECIFICATIONS AND REQUIREMENTS.

REVISIONS | DATE

BB&T - COCONUT CREEK BRANCH
5700 COCONUT CREEK PARKWAY
MARGATE, FLORIDA 33063

SITE UTILITIES DETAILS

H & T CONSULTANTS, INC.
PLANNING – ENGINEERING
9310 OLD KINGS ROAD SOUTH, SUITE 1001
JACKSONVILLE , FLORIDA 32257
PHONE: 904-419-1001 FAX: 904-419-1004

JOB NO:
DRAWN: ALT
CHECK: SGH
DATE: OCT 2014

PLATE
C-8

SHEET OF

WET WELL/VALVE BOX LAYOUT

PLAN VIEW

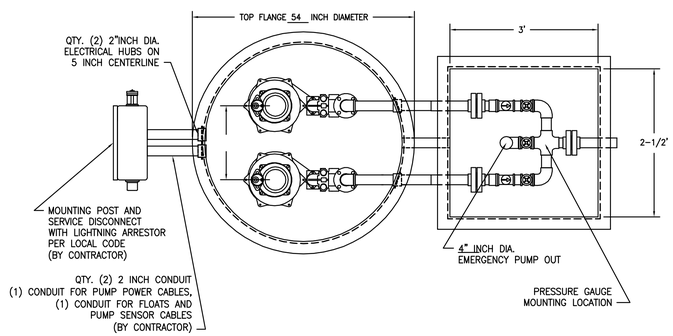

SECTION VIEW

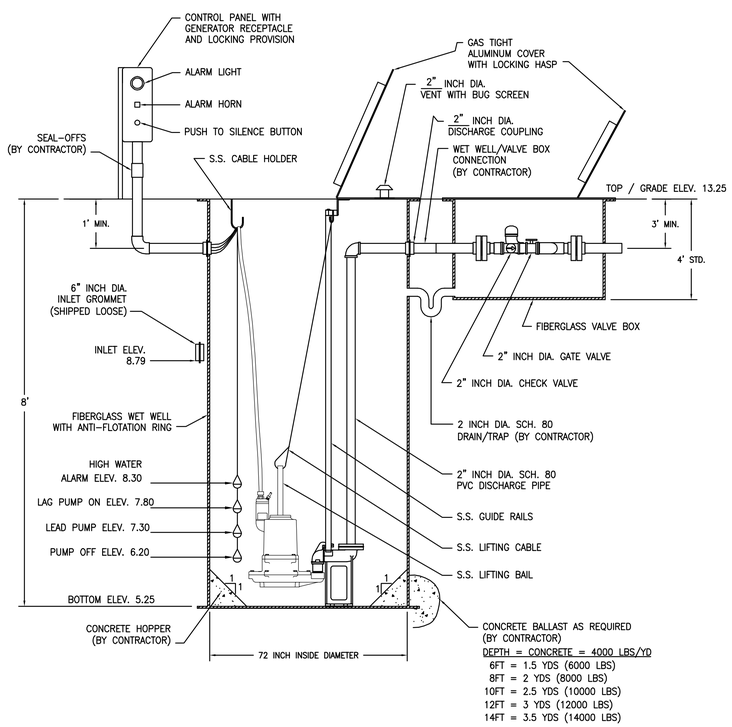

FDEP REQUIRMENTS

PROVIDE CONCRETE HOPPER WITH 1:1 SLOPE.
PROVIDE 3/4" WATER LINE WITH A 3/4" RPZ.
ALL ELECTRICAL PANELS SHALL BE ABOVE THE 100 YEAR FLOOD ELEVATION.

GENERAL NOTES

DESIGN CONDITIONS

MODEL	GRP16/3	2.0	HP
GPM	MAX=15 MIN=56	MAX=67' MIN=43'	FT/TDH
VOLTAGE	208	3	PHASE
DISCHARGE	2'	4.875' A	IMPELLER

PUMPS SHALL BE OF THE SUBMERSIBLE TYPE. EACH PUMP SHALL BE MOUNTED ON A Ø2" RAIL SYSTEM. THE RAIL SYSTEM SHALL BE SELF ENGAGING RESULTING IN A LEAKPROOF COUPLING. THE RAIL SYSTEM SHALL INCLUDE THE BASE ELBOW, DISCHARGE FLANGE ASSEMBLY, Ø1" 304SS GUIDE RAILS, 316SS UPPER GUIDE BRACKET, 316SS LIFTING BAIL AND CABLE, AND A SIX-HOOK 316SS CABLE HOLDER. THE RAIL SYSTEM SHALL BE MOUNTED AND PRE-PIPED BY THE PUMP SUPPLIER.

PUMP CONSTRUCTION
THE PUMP VOLUTE, MOTOR AND SEAL HOUSING SHALL BE CONSTRUCTED OF CAST IRON, ASTM A-48. ALL EXTERNAL FASTENERS SHALL BE SERIES 300 STAINLESS STEEL. THE PUMP SHAFT SHALL BE CONSTRUCTED OF SERIES 416 STAINLESS STEEL.

IMPELLER
THE IMPELLER SHALL BE OF MULTI-VANE, SEMI-OPEN BRONZE CONSTRUCTION. THE IMPELLER SHALL INCLUDE PUMP-OUT VANES ON THE BACK OF THE IMPELLER AND SHALL BE STATICALLY AND HYDRAULICALLY BALANCED.

CUTTERS
A TWO-STAGE CUTTER ASSEMBLY SHALL BE MOUNTED ON THE SUCTION SIDE OF THE PUMP WITH DIRECT DISCHARGE INTO THE PUMP IMPELLER. THE GRINDER SHALL BE CAPABLE OF GRINDING ALL MATERIALS FOUND IN NORMAL, DOMESTIC SEWAGE, INCLUDING PLASTICS, RUBBER, SANITARY NAPKINS, DISPOSABLE DIAPERS AND WOOD PARTICLES, INTO A FINE SLURRY. BOTH THE STATIONARY AND ROTATING CUTTERS SHALL BE CONSTRUCTED OF HARDENED 440C STAINLESS STEEL.

MOTOR
THE MOTOR SHALL BE MOUNTED IN A SEALED, SUBMERSIBLE TYPE HOUSING. THE STATOR SHALL BE SECURELY HELD IN PLACE WITH A REMOVABLE END RING AND THREADED FASTENERS FOR EASE OF REMOVAL WITHOUT THE USE OF HEAT OR A PRESS. THE MOTOR WILL HAVE TWO HEAVY-DUTY BALL BEARINGS; ONE UPPER (RADIAL) AND ONE LOWER (THRUST), TO SUPPORT THE SHAFT. THE MOTOR SHALL BE EQUIPPED WITH A WINDING THERMOSTAT THAT AUTOMATICALLY SHUTS THE MOTOR OFF IN CASE OF MOTOR OVERHEATING.

SEAL CHAMBER
THE PUMP SHALL HAVE TWO MECHANICAL SEALS, MOUNTED IN TANDEM WITH AN OIL CHAMBER BETWEEN THE SEALS. THE PUMP SHALL BE EQUIPPED WITH A SEAL LEAK DETECTION PROBE AND WARNING SYSTEM BY USING A SEAL FAILURE SENSOR INSTALLED IN THE SEAL CHAMBER.

WET WELL
THE PUMP SUPPLIER SHALL PROVIDE THE FIBERGLASS WET WELL. THIS GLASS FIBER-REINFORCED POLYESTER BASIN SHALL BE CONSTRUCTED OF A COMMERCIAL GRADE OF GLASS FIBER AND SHALL BE PROVIDED WITH AN ANTI-FLOTATION RING WITH A MINIMUM DIAMETER OF THREE INCHES LARGER THAN THE BASIN DIAMETER. THE RAIL SYSTEM, INTERNAL PIPING AND DISCHARGE CONNECTIONS SHALL BE PRE-INSTALLED BY THE PUMP SUPPLIER.

HATCH COVER
THE HATCH COVER SHALL BE 2/3 HINGED TO ALLOW FOR MAXIMUM ACCESS TO THE WET WELL. THE HATCH COVER SHALL BE ALUMINUM WITH STAINLESS STEEL FASTENERS, RATED FOR 150 PSF OR GREATER. THE HATCH COVER SHALL INCLUDE A SINGLE OR DUAL DOOR OF DIMENSIONS SPECIFIED BY THE PUMP MANUFACTURER FOR PROPER PUMP CLEARANCE. THE COVER SHALL BE MANUFACTURED BY US FABRICATION, OR EQUAL.

VALVE BOX
THE VALVE BOX IS FIBERGLASS WITH ALUMINUM LOCKABLE COVER. STANDARD SIZE VALVE BOX IS 3' X 2 1/2' X 2'.

VALVES
VALVES SHALL BE SEWAGE SWING CHECK WITH CLEAN-OUT PORTS AND BRASS GATE VALVES.

FLOATS
FLOATS SHALL BE ANCHOR SCIENTIFIC ROTO-FLOATS OR EQUAL.

CONTROLS
THE CONTROL PANEL SHALL BE UL508 LISTED. A NEMA 3R OR 4X ENCLOSURE SHALL BE PROVIDED IN EITHER FIBERGLASS OR STAINLESS STEEL. THE PANEL SHALL INCLUDE AN ALTERNATING CONTROL SCHEME (DUPLEX AND ABOVE), MAIN CIRCUIT BREAKER, GENERATOR RECEPTACLE, HIGH LEVEL ALARM LIGHT AND HORN, ELAPSED TIME METERS, VOLTAGE OR PHASE MONITOR, SEAL FAILURE AND OVERLOAD SENSORS. THE LIGHTNING ARRESTOR SHALL BE SHIPPED LOOSE FOR FIELD INSTALLATION.

SUPPLIER
PUMP SUPPLIER SHALL PROVIDE SUBMERSIBLE PUMPS, SLIDE RAIL ASSEMBLIES, CONTROL PANEL, FLOAT SWITCHES, ALUMINUM HATCHES AND ACCESSORIES TO INSURE PROPER OPERATIONS AND WARRANTY. THE COMPLETE PACKAGE PUMPING STATION SHALL HAVE PUMP BASES, RAIL ASSEMBLIES, AND DISCHARGE PIPING ASSEMBLED BY BARNEY'S PUMPS INC. READY FOR FIELD INSTALLATION.

PUMP PACKAGE SHALL BE SUPPLIED BY BARNEY'S PUMPS INC. IN LAKELAND (863-665-8500), CORAL SPRINGS (954-346-0669), OR JACKSONVILLE (904-260-0669), FL.

ELECTRICAL DATA

INCOMING POWER: ____V ____ø
(CONTRACTOR TO VERIFY)

ENCLOSURE AND DEADFRONT LAYOUT (TYPICAL)
(OUTER DOOR REMOVED)

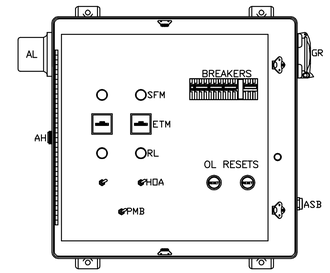

NEMA 4X ENCLOSURE STAINLESS STEEL

BASE PLATE LAYOUT (TYPICAL)

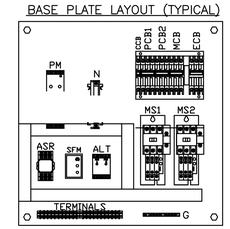

TERMINAL STRIP

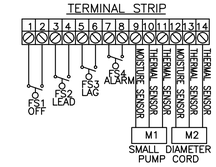

LEGEND

ENC	ENCLOSURE
MCB	MAIN CIRCUIT BREAKER
ECB	EMERGENCY CIRCUIT BREAKER
PCB1,2	PUMP CIRCUIT BREAKER
CCB	CONTROL CIRCUIT BREAKER
MS1,2	MOTOR STARTER
OL	OVERLOAD HEATER
GR	GENERATOR RECEPTACLE
VM	VOLT MONITOR
ETM	ELAPSED TIME METER
ALT	ALTERNATOR
AH	ALARM HORN
AL	ALARM LIGHT
ASB	ALARM SILENCE BUTTON
HOA	HAND OFF AUTO SWITCH
VMB	VOLT MONITOR BYPASS
RL	RUN LIGHT
IL	INDICATING LIGHT
SFM	SEAL FAIL MODULE
ASR	ALARM SILENCE RELAY
	RUN CAPACITOR
	START CAPACITOR
	START RELAY
PM	PHASE MONITOR
PMB	PHASE MONITOR BYPASS

230V SINGLE PHASE WIRING DIAGRAM

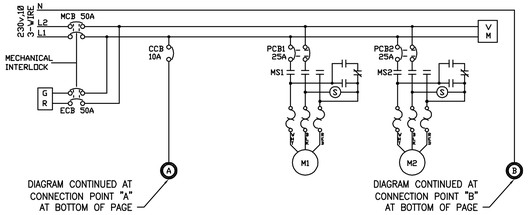

230V THREE PHASE WIRING DIAGRAM

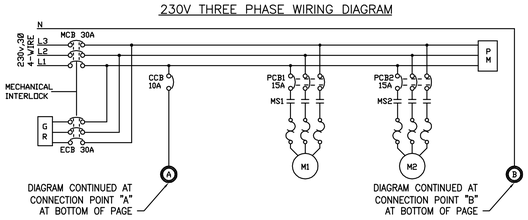

480V THREE PHASE WIRING DIAGRAM

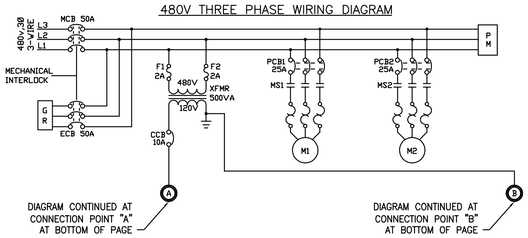

CONTINUATION OF WIRING DIAGRAMS FROM ABOVE

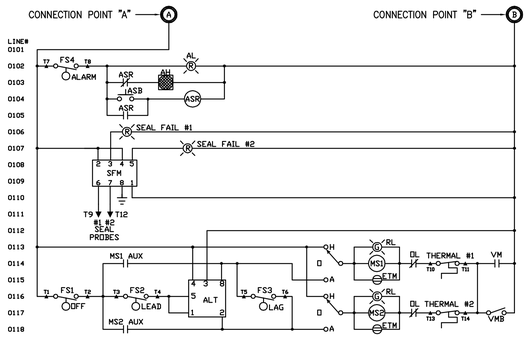

ALL PANELS SHALL CONFORM TO FLORIDA DEP 17-604.400

1) GENERATOR RECEPTACLE WITH INTERLOCK FOR EMERGENCY POWER CONNECTION.
2) SURGE AND LIGHTNING PROTECTION SHALL BE PROVIDED BY CONTRACTOR AND MOUNTED EXTERNAL TO THE CONTROL PANEL.
3) PHASE OR VOLTAGE MONITOR SHALL BE PROVIDED IN CONTROL PANEL.
4) ALL PANELS, WET WELL, VALVE BOX, AND ACCESS DOORS SHALL HAVE LOCKABLE MECHANISMS. CONTRACTOR TO PROVIDE KEYED LOCKS.
5) POST UNOBSTRUCTED SIGN MADE OF DURABLE WEATHER RESISTANT MATERIAL WITH THE FOLLOWING: PUBLIC NOTICE: IN CASE OF EMERGENCY CONTACT:
6) THE CONTROL PANEL SHALL BE SUITABLY INSTALLED TO PREVENT SETTLING OR TIPPING.
7) ELECTRICAL CONTRACTOR TO PROVIDE SERVICE DISCONNECT WITH LIGHTNING ARRESTOR MOUNTED PER LOCAL CODES.
8) FLOAT SWITCHES SHALL BE UL LISTED.

PANEL MANUFACTURER SHALL BE UL 508 AND UL 698A LISTED.

BARNEY'S PUMPS, INC.
PO BOX 3529, LAKELAND, FL 33802 — PHONE: (863) 665-8500 — FAX: (863) 666-3858

TITLE: WW-DUPLEX-GRINDER-FIBERGLASS-VALVE BOX-FRONT LOAD-MULTI SPEC			
CUSTOMER: –			
SALESPERSON:		DWG. #: WW2GFVFM	REV.: –
DWG. BY: S. TOWLES	DATE: 07/06/2006	PAGE: 1 OF 1	

REVISIONS | DATE

BB&T - COCONUT CREEK BRANCH
5700 COCONUT CREEK PARKWAY
MARGATE, FLORIDA 33063

PUMP STATION DETAILS

H & T CONSULTANTS, INC.
PLANNING – ENGINEERING
9310 OLD KINGS ROAD SOUTH, SUITE 1001
JACKSONVILLE , FLORIDA 32257
PHONE: 904-419-1001 FAX: 904-419-1004

JOB NO:
DRAWN: AJL
CHECK: SGH
DATE: OCT 2014

PLATE
C-9

SHEET OF

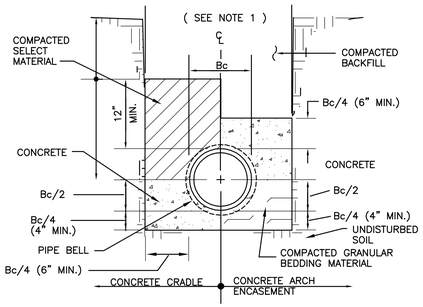

CLASS "A" BEDDING–SPECIAL CONDITIONS

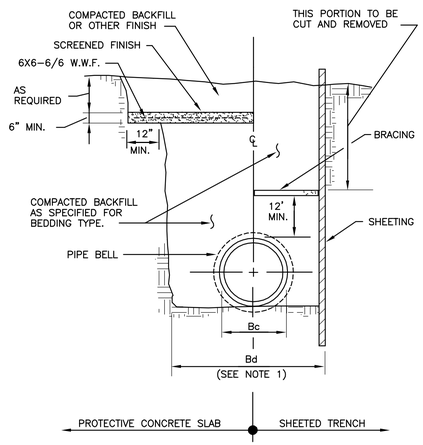

SPECIAL DETAIL

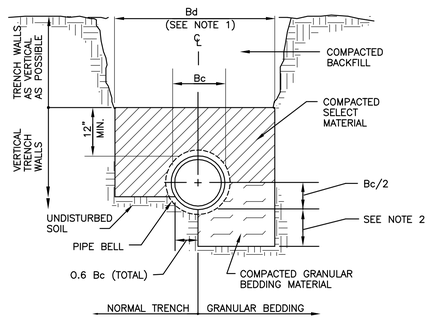

CLASS "B" BEDDING–NORMAL CONDITIONS

BEDDING AND TRENCHING NOTES

1. Bc = PIPE O.D.
   Bd = TRENCH WIDTH AT TOP OF PIPE
   MAX. Bd = Bc + 24"
   MIN. Bd = MAX. DIM. OF BELL + 8" (UNSHEETED TRENCH)
   MAX. DIM. OF BELL + 12" (SHEETED TRENCH)
2. DEPTH FOR REMOVAL OF UNSUITABLE MATERIAL SHALL BE AS REQUIRED TO REACH SUITABLE FOUNDATION FOR NON–CUSHIONING MATERIAL, DEPTH SHALL BE 6" BELOW BOTTOM OF UTILITY.
3. SHEETING SHALL BE DRIVEN BELOW THE UTILITY INVERT IF REQUIRED FOR LATERAL SUPPORT OR UNSUITABLE MATERIAL REMOVAL. WHERE DRIVEN BELOW PIPE INVERT, SHEETING SHALL BE CUT OFF A MINIMUN OF 12" ABOVE TOP OF PIPE, OR HIGHER AS AUTHORIZED BY THE ENGINEER, AND LEFT IN PLACE. IN NO CASE SHALL SHEETING LEFT IN PLACE EXTEND HIGHER THAN 30" BELOW SURFACE GRADE UNLESS SPECIFICALLY APPROVED. BRACING SHALL BE APPROVED AS REQUIRED.
4. PROTECTIVE CONCRETE SLABS ARE REQUIRED WHENEVER DEPTH OF COVER IS LESS THAN 36" AND IF APPROVED BY THE UTILITY.
5. BACKFILL TO BE COMPACTED TO 98% DENSITY OF AASHTO T180 MOTIFIED PROCTOR IN AREAS TO BE PAVED AND 95% AT ALL OTHERS.

PIPE BEDDING & TRENCHING DETAILS FOR NON–PERFORATED PIPE

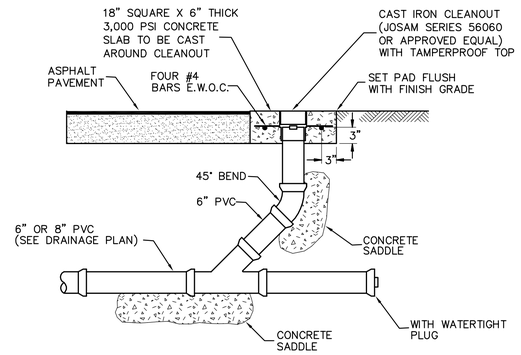

ROOF DRAIN CLEANOUT DETAIL

N.T.S.

NOTES:

1. WOVEN GEOTEXTILE FABRIC (AT EACH SIDE, TOP AND BOTTOM) SHALL BE USED IN SANDY OR FILLED AREAS. USE TYPE D–3 PER FDOT INDEX 199.
2. WASH DOWN THE BALLAST ROCK WITH CLEAN WATER AFTER ROCK HAS BEEN PLACED TO THE PROPER ELEVATION TO ALLOW FOR INITIAL SETTLEMENT THAT MAY OCCUR. ADD ADDITIONAL BALLAST ROCK TO RESTORE ROCK TO THE PROPER ELEVATION IN ACCORDANCE WITH THE DETAILS.
3. SEE FDOT INDEX 241 FOR OUTLET PIPE SKIMMER DETAILS.

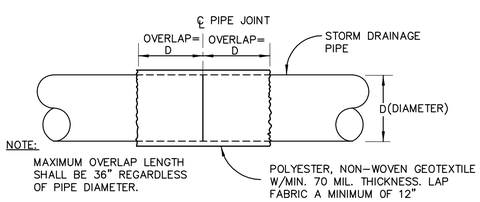

NOTE: ALL STORM DRAINAGE PIPE JOINTS SHALL BE WRAPPED WITH FILTER FABRIC.

JOINT WRAPPING DETAIL

N.T.S.

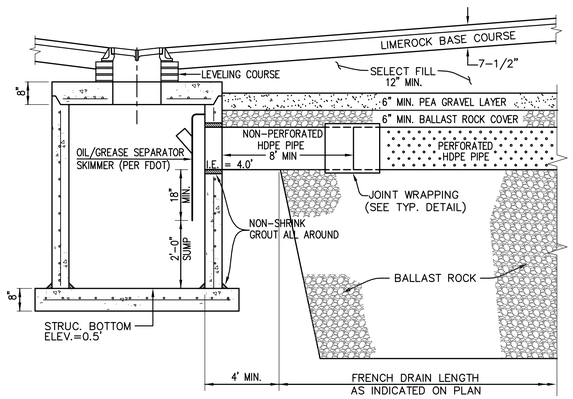

LONGITUDINAL SECTION

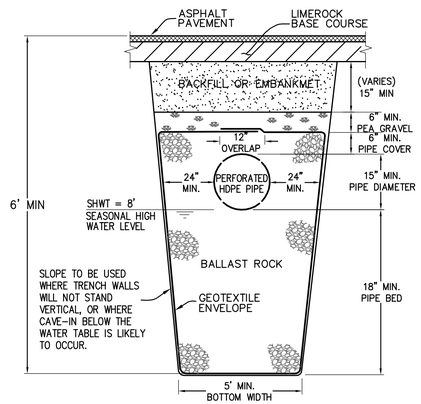

CROSS SECTION

EXFILTRATION TRENCH TYPICAL DETAILS

N.T.S.

NORTH

N

20' 0 20'

SCALE: 1"=20'

REVISIONS	DATE

BB&T - COCONUT CREEK BRANCH

5700 COCONUT CREEK PARKWAY
MARGATE, FLORIDA 33063

BB&T

DRAINAGE DETAILS

H & T CONSULTANTS, INC.
PLANNING – ENGINEERING
9310 OLD KINGS ROAD SOUTH, SUITE 1001
JACKSONVILLE , FLORIDA 32257
PHONE: 904–419–1001 FAX: 904–419–1004

H&T

JOB NO:	
DRAWN: ALT	
CHECK: SGH	
DATE: OCT–31–14	
PLATE	
C-10	
SHEET	OF

STORM WATER POLLUTION PREVENTION PLAN

OWNER'S REQUIREMENTS

SITE DESCRIPTION

PROJECT NAME AND LOCATION:

BB&T - COCONUT CREEK BRANCH
5700 COCONUT CREEK PARKWAY
MARGATE, FLORIDA 33063

OWNER NAME AND ADDRESS:

BRANCH BANK & TRUST CO.
2525 HOWELL BRANCH ROAD, SUITE 1021
CASSELLBERRY FLORIDA 32707

DESCRIPTION:

CONSTRUCT NEW BUILDING AND PARKING LOT.
PROVIDE NEW SMS AS REQUIRED TO ACCOMMODATE IMPROVEMENTS PER AUTHORITIES WITH JURISDICTION.

SOIL DISTURBING ACTIVITIES WILL INCLUDE:
SITE CLEARING, GRADING, EXCAVATIONS, CONSTUCTION OF FACILITY

RUNOFF CURVE NUMBERS:

1. PRE-CONSTRUCTION = 76
2. DURING CONSTRUCTION = 74
3. POST-CONSTRUCTION = 86

SOILS:

55% - POMPANO FINE SAND (0% TO 5% SLOPES)
45% - UDORTHENTS (0% TO 5% SLOPES)

SITE MAPS:

* SEE USDA SCS, CITY OF MARGATE SOIL SURVEY
* SEE USGS QUADRANGLE MAP *, FLORIDA*
* SEE ATTACHED EROSION & TURBIDITY CONTROL PLAN FOR TEMPORARY STABILIZATION PRACTICES, AND TURBIDITY BARRIERS
* SEE GENERAL NOTES FOR REQUIRMENTS FOR TEMPORARY AND PERMANENT STABILIZATION.

SITE AREA:

1. TOTAL AREA OF SITE = 0.87 AC
2. TOTAL AREA TO BE DISTURBED = 0.87 AC

NAME OF RECEIVING WATERS:

CITY OF MARGATE CANAL C-14, NORTH OF THE PROJECT SITE

CONTROLS

THIS PLAN UTILIZES BEST MANAGEMENT PRACTICES TO CONTROL EROSION AND TURBIDITY CAUSED BY STORM WATER RUN OFF. AN EROSION AND TURBIDITY PLAN HAS BEEN PREPARED TO INSTRUCT THE CONTRACTOR ON PLACEMENT OF THESE CONTROLS. IT IS THE CONTRACTORS RESPONSIBILITY TO INSTALL AND MAINTAIN THE CONTROLS PER PLAN AS WELL AS ENSURING THE PLAN IS PROVIDING THE PROPER PROTECTION AS REQUIRED BY FEDERAL, STATE AND LOCAL LAWS. REFER TO "CONTRACTORS RESPONSIBILITY" FOR A VERBAL DESCRIPTION OF THE CONTROLS THAT MAY BE IMPLEMENTED.

STORM WATER MANAGEMENT

PROJECT STORM WATER DRAINAGE WILL BE PROVIDED BY STANDARD INLET COLLECTION SYSTEM, CONVEYANCE AND DISCHARGE TO PRIVATE RETENTION POND. AREAS WHICH ARE NOT TO BE CONSTRUCTED ON, BUT WILL BE REGRADED SHALL BE STABILIZED IMMEDIATELY AFTER GRADING IS COMPLETE, WHEN CONSTRUCTION IS COMPLETE, A TOTAL OF 0.95 ACRES WILL HAVE BEEN REGRADED & 0.11 ACRES LEFT UNDISTURBED. THE SITE DISCHARGES TO A MASTER STORM WATER SYSTEM. WHERE PRACTICAL, TEMPORARY SEDIMENT BASINS WILL BE USED TO INTERCEPT SEDIMENT BEFORE ENTERING THE PERMANENT STORMWATER BASIN. THE STORMWATER SYSTEM IS DESIGNED IN ACCORDANCE WITH THE REQUIREMENTS SET FORTH BY THE DEPARTMENT OF ENVIRONMENTAL PROTECTION FOR THIS TYPE OF DEVELOPMENT AT THE TIME IT WAS CONSTRUCTED.

TIMING OF CONTROLS/MEASURES

REFER TO * CONTRACTORS RESPONSIBILITY* FOR THE TIMING OF CONTROL/MEASURES.

CERTIFICATION OF COMPLIANCE WITH FEDERAL, STATE AND LOCAL REGULATIONS

IN ACCORDANCE WITH FEDERAL, STATE AND LOCAL LAWS RELATED TO STORM WATER MANAGEMENT AND EROSION AND TURBIDITY CONTROLS, THE FOLLOWING PERMITS HAVE BEEN OBTAINED.

DEP STANDARD GENERAL STORMWATER PERMIT NO.:
DEP NPDES PERMIT NO.:

OWNER'S CERTIFICATION

I CERTIFY UNDER PENALTY OF LAW THAT THIS DOCUMENT AND ALL ATTACHMENTS WERE PREPARED UNDER MY DIRECTION OR SUPERVISION IN ACCORDANCE WITH A SYSTEM DESIGNED TO ASSURE THAT QUALIFIED PERSONNEL PROPERLY GATHERED AND EVALUATED THE INFORMATION SUBMITTED. BASED ON MY INQUIRY OF THE PERSON OR PERSONS WHO MANAGE THE SYSTEM, OR THOSE PERSONS DIRECTLY RESPONSIBLE FOR GATHERING THE INFORMATION, THE INFORMATION SUBMITTED IS, TO THE BEST OF MY KNOWLEDGE AND BELIEF, TRUE, ACCURATE, AND COMPLETE. I AM AWARE THAT THERE ARE SIGNIFICANT PENALTIES FOR SUBMITTING FALSE INFORMATION, INCLUDING THE POSSIBILITY OF FINE AND IMPRISONMENT FOR KNOWING VIOLATIONS.

SIGNED:_____

DATED:_____

CONTRACTOR'S REQUIREMENTS

GENERAL

THE CONTRACTOR SHALL AT A MINIMUM IMPLEMENT THE CONTRACTOR'S REQUIREMENTS OUTLINED BELOW AND THOSE MEASURES SHOWN ON THE EROSION AND TURBIDITY CONTROL PLAN. IN ADDITION THE CONTRACTOR SHALL UNDERTAKE ADDITIONAL MEASURES REQUIRED TO BE IN COMPLIANCE WITH APPLICABLE PERMIT CONDITIONS AND STATE WATER QUALITY STANDARDS. DEPENDING ON THE NATURE OF MATERIALS AND METHODS OF CONSTRUCTION THE CONTRACTOR MAY BE REQUIRED TO ADD FLOCCULANTS TO THE RETENTION SYSTEM PRIOR TO PLACING THE SYSTEM INTO OPERATION.

SEQUENCE OF MAJOR ACTIVITIES:

THE ORDER OF ACTIVITIES WILL BE AS FOLLOWS:

1. INSTALL STABILIZED CONSTRUCTION ENTRANCE
2. INSTALL SILT FENCES AND HAY BALES AS REQUIRED
3. CLEAR AND GRUB FOR DIVERSION SWALES/DIKES AND SEDIMENT BASIN
4. CONSTRUCT SEDIMENTATION BASIN
5. CONTINUE CLEARING AND GRUBBING
6. STOCK PILE TOP SOIL IF REQUIRED
7. PERFORM PRELIMINARY GRADING ON SITE AS REQUIRED
8. STABILIZE DENUDED AREAS AND STOCKPILES AS SOON AS PRACTICABLE
9. INSTALL STORM SEWER, AND IRRIGATION.
10. COMPLETE GRADING AND INSTALL PERMANENT SEEDING/SOD AND PLANTING
11. REMOVE ACCUMULATED SEDIMENT FROM BASINS
12. WHEN ALL CONSTRUCTION ACTIVITY IS COMPLETE AND THE SITE IS STABILIZED, REMOVE ANY TEMPORARY DIVERSION SWALES/DIKES AND RESEED/SOD AS REQUIRED

TIMING OF CONTROLS/MEASURES

AS INDICATED IN THE SEQUENCE OF MAJOR ACTIVITIES, THE SILT FENCES AND HAY BALES, STABILIZED CONSTRUCTION ENTRANCE AND SEDIMENT BASIN WILL BE CONSTRUCTED PRIOR TO CLEARING OR GRADING OF ANY OTHER PORTIONS OF THE SITE. STABILIZATION MEASURES SHALL BE INITIATED AS SOON AS PRACTICAL IN PORTIONS OF THE SITE WHERE CONSTRUCTION ACTIVITIES HAVE TEMPORARILY OR PERMANENTLY CEASED. ONCE CONSTRUCTION ACTIVITY CEASES PERMANENTLY IN AN AREA, THAT AREA WILL BE STABILIZED PERMANENTLY IN ACCORDANCE WITH THE PLANS. AFTER THE ENTIRE SITE IS STABILIZED, THE ACCUMULATED SEDIMENT WILL BE REMOVED FROM THE SEDIMENT TRAPS AND THE EARTH DIKE/SWALES WILL BE REGRADED/REMOVED AND STABILIZED IN ACCORDANCE WITH THE EROSION & TURBIDITY CONTROL PLAN.

CONTROLS

IT IS THE CONTRACTORS RESPONSIBILITY TO IMPLEMENT THE EROSION AND TURBIDITY CONTROLS AS SHOWN ON THE EROSION AND TURBIDITY CONTROL PLAN. IT IS ALSO THE CONTRACTORS RESPONSIBILITY TO ENSURE THESE CONTROLS ARE PROPERLY INSTALLED , MAINTAINED AND FUNCTIONING PROPERLY TO PREVENT TURBID OR POLLUTED WATER FROM LEAVING THE PROJECT SITE. THE CONTRACTOR WILL ADJUST THE EROSION AND TURBIDITY CONTROLS SHOWN ON THE EROSON AND TURBIDITY CONTROL PLAN AND ADD ADDITIONAL CONTROL MEASURES, AS REQUIRED,TO ENSURE THE SITE MEETS ALL FEDERAL, STATE AND LOCAL EROSION AND TURBIDITY CONTROL REQUIREMENTS. THE FOLLOWING BEST MANAGEMENT PRACTICES WILL BE IMPLEMENTED BY THE CONTRACTOR AS REQUIRED BY THE EROSION AND TURBIDITY CONTROL PLAN AND AS REQUIRED TO MEET THE EROSION AND TURBIDITY REQUIREMENTS IMPOSED ON THE PROJECT SITE BY THE REGULATORY AGENCIES.

STABILIZATION PRACTICES EROSION AND SEDIMENT CONTROLS

1. HAY BALE BARRIER: HAY BALE BARRIERS CAN BE USED BELOW DISTURBED AREAS SUBJECT TO SHEET AND RILL EROSION WITH THE FOLLOWING LIMITATIONS:
   A. WHERE THE MAXIMUM SLOPE BEHIND THE BARRIER IS 33 PERCENT.
   B. IN MINOR SWALES OR DITCH LINES WHERE THE MAXIMUM CONTRIBUTING DRAINAGE AREA IS NO GREATER THAN 2 ACRES.
   C. WHERE EFFECTIVENESS IS REQUIRED FOR LESS THAN 3 MONTHS.
   D. EVERY EFFORT SHOULD BE MADE TO LIMIT THE USE OF STRAW BALE BARRIERS CONSTRUCTED IN LIVE STREAMS OR IN SWALES WHERE THERE IS THE POSSIBILITY OF A WASHOUT. IF NECESSARY, MEASURES SHALL BE TAKEN TO PROPERLY ANCHOR BALES TO INSURE AGAINST WASHOUT.

   REFER TO STANDARD DETAILS FOR CONSTRUCTING THE HAY BALE BARRIER. ALSO REFER TO STANDARD DETAILS AND REQUIREMENT FOR PROPER LOCATION, MATERIAL & USAGE.
2. FILTER FABRIC BARRIER: FILTER FABRIC BARRIERS CAN BE USED BELOW DISTURBED AREAS SUBJECT TO SHEET AND RILL EROSION WITH THE FOLLOWING LIMITATIONS:
   A. WHERE THE MAXIMUM SLOPE BEHIND THE BARRIER IS 33 PERCENT.
   B. IN MINOR SWALES OR DITCH LINES WHERE THE MAXIMUM CONTRIBUTING DRAINAGE AREA IS NO GREATER THAN 2 ACRES. REFER TO STANDARD DETAILS FOR PROPER CONSTRUCTION OF THE FILTER FABRIC BARRIER.
3. BRUSH BARRIER WITH FILTER FABRIC: BRUSH BARRIER MAY BE USED BELOW DISTURBED AREAS SUBJECT TO SHEET AND RILL EROSION WHERE ENOUGH RESIDUE MATERIAL IS AVAILABLE ON SITE.
4. LEVEL SPREADER: A LEVEL SPREADER MAY BE USED WHERE SEDIMENT-FREE STORM RUNOFF IS INTERCEPTED AND DIVERTED AWAY FROM THE GRADED AREAS ONTO UNDISTURBED STABILIZED AREAS. THIS PRACTICE APPLIES ONLY IN THOSE SITUATIONS WHERE THE SPREADER CAN BE

STABILIZATION PRACTICES EROSION AND SEDIMENT CONTROLS(cont.)

4(cont) CONSTRUCTED ON UNDISTURBED SOIL AND THE AREA BELOW THE LEVEL LIP IS STABILIZED. THE WATER SHOULD NOT BE ALLOWED TO RECONCENTRATE AFTER RELEASE. LEVEL SPREADER SHALL BE CONSTRUCTED IN ACCORDANCE TO CITY STANDARD DETAIL D-914.

5. STOCKPILING MATERIAL: NO EXCAVATED MATERIAL SHALL BE STOCKPILED IN SUCH A MANNER AS TO DIRECT RUNOFF DIRECTLY OFF THE PROJECT SITE INTO ANY ADJACENT WATER BODY OR STORM WATER COLLECTION FACILITY.
6. EXPOSED AREA LIMITATION: THE SURFACE AREA OF OPEN, RAW ERODIBLE SOIL EXPOSED BY CLEARING AND GRUBBING OPERATIONS OR EXCAVATION AND FILLING OPERATIONS SHALL NOT EXCEED 10 ACRES. THIS REQUIREMENT MAY BE WAIVED FOR LARGE PROJECTS WITH AN EROSION CONTROL PLAN WHICH DEMONSTRATES THAT OPENING OF ADDITIONAL AREAS WILL NOT SIGNIFICANTLY AFFECT OFF-SITE DEPOSIT OF SEDIMENTS.
7. INLET PROTECTION: INLETS AND CATCH BASINS WHICH DISCHARGE DIRECTLY OFF-SITE SHALL BE PROTECTED FROM SEDIMENT-LADEN STORM RUNOFF UNTIL THE COMPLETION OF ALL CONSTRUCTION OPERATIONS THAT MAY CONTRIBUTE SEDIMENT TO THE INLET.
8. TEMPORARY SEEDING: AREAS OPENED BY CONSTRUCTION OPERATIONS AND THAT ARE NOT ANTICIPATED TO BE RE-EXCAVATED OR DRESSED AND RECEIVE FINAL GRASSING TREATMENT WITHIN 30 DAYS SHALL BE SEEDED WITH A QUICK GROWING GRASS SPECIES WHICH WILL PROVIDE AN EARLY COVER DURING THE SEASON IN WHICH IT IS PLANTED AND WILL NOT LATER COMPETE WITH THE PERMANENT GRASSING.
9. TEMPORARY SEEDING AND MULCHING: SLOPES STEEPER THAN 6:1 THAT FALL WITHIN THE CATEGORY ESTABLISHED IN PARAGRAPH 8 ABOVE SHALL ADDITIONALLY RECEIVE MULCHING OF APPROXIMATELY 2 INCHES LOOSE MEASURE OF MULCH MATERIAL CUT INTO THE SOIL OF THE SEEDED AREA ADEQUATE TO PREVENT MOVEMENT OF SEED AND MULCH.
10. TEMPORARY GRASSING: THE SEEDED OR SEEDED AND MULCHED AREA(S) SHALL BE ROLLED AND WATERED OR HYDROMULCHED OR OTHER SUITABLE METHODS IF REQUIRED TO ASSURE OPTIMUM GROWING CONDITIONS FOR THE ESTABLISHMENT OF A GOOD GRASS COVER. TEMPORARY GRASSING SHALL BE THE SAME MIX & AMOUNT REQUIRED FOR PERMANENT GRASSING IN THE CONTRACT SPECIFICATIONS.
11. TEMPORARY REGRASSING : IF, AFTER 14 DAYS FROM SEEDING, THE TEMPORARY GRASSED AREAS HAVE NOT ATTAINED A MINIMUM OF 75 PERCENT GOOD GRASS COVER, THE AREA WILL BE REWORKED AND ADDITIONAL SEED APPLIED SUFFICIENT TO ESTABLISH THE DESIRED VEGETATIVE COVER.
12. MAINTENANCE: ALL FEATURES OF THE PROJECT DESIGNED AND CONSTRUCTED TO PREVENT EROSION AND SEDIMENT SHALL BE MAINTAINED DURING THE LIFE OF THE CONSTRUCTION SO AS TO FUNCTION AS THEY WERE ORIGINALLY DESIGNED AND CONSTRUCTED.
13. PERMANENT EROSION CONTROL: THE EROSION CONTROL FACILITIES OF THE PROJECT SHOULD BE DESIGNED TO MINIMIZE THE IMPACT ON THE OFFSITE FACILITIES.
14. PERMANENT SEEDING: ALL AREAS WHICH HAVE BEEN DISTURBED BY CONSTRUCTION WILL, AS A MINIMUM, BE SEEDED. THE SEEDING MIX MUST PROVIDE BOTH LONG-TERM VEGETATION AND RAPID GROWTH SEASONAL VEGETATION. SLOPES STEEPER THAN 4:1 SHALL BE SEEDED AND MULCHED OR SODDED.

STRUCTURAL PRACTICES

1. TEMPORARY DIVERSION DIKE: TEMPORARY DIVERSION DIKES MAY BE USED TO DIVERT RUNOFF THROUGH A SEDIMENT-TRAPPING FACILITY. AND IT SHALL BE CONSTRUCTED IN ACCORDANCE TO D-914.
2. TEMPORARY SEDIMENT TRAP: A SEDIMENT TRAP SHALL BE INSTALLED IN AN DRAINAGEWAY AT A STORM DRAIN INLET OR AT OTHER POINTS OF DISCHARGE FROM A DISTURBED AREA.
   THE FOLLOWING SEDIMENT TRAPS MAY BE CONSTRUCTED EITHER INDEPENDANTLY OR IN CONJUNCTION WITH A TEMPORARY DIVERSION

DIKE:

1. BLOCK & GRAVEL SEDIMENT FILTER - THIS PROTECTION IS APPLICABLE WHERE HEAVY FLOWS AND/OR WHERE AN OVERFLOW CAPACITY IS NECESSARY TO PREVENT EXCESSIVE PONDING AROUND THE STRUCTURE. REFER TO D-902 FOR CONSTRUCTION OF A CURB INLET SEDIMENT FILTER, AND D-904 FOR CONSTRUCTION OF A DROP INLET SEDIMENT FILTER.
2. GRAVEL SEDIMENT TRAP - THIS PROTECTION IS APPLICABLE WHERE HEAVY CONCENTRATED FLOWS ARE EXPECTED, BUT NOT WHERE PONDING AROUND THE STRUCTURE MIGHT CAUSE EXCESSIVE INCONVENIENCE OR DAMAGE TO ADJACENT STRUCTURES & UNPROTECTED AREAS. REFER TO D-903 FOR CONSTRUCTION OF CURB INLET & DROP SEDIMENT TRAP.
3. DROP INLET SEDIMENT TRAP - THIS PROTECTION IS APPLICABLE WHERE THE INLET DRAINS A RELATIVELY FLAT AREA (S < 5%) AND WHERE SHEET OR OVERLAND FLOWS (Q < 0.5 CFS) ARE TYPICAL. THIS METHOD SHALL NOT APPLY TO INLETS RECEIVING CONCENTRATED FLOWS SUCH AS IN STREET OR HIGHWAY MEDIANS. REFER TO D-905 FOR CONSTRUCTION OF HAY BALE & FABRIC SEDIMENT FILTER.
4. OUTLET PROTECTION: APPLICABLE TO THE OUTLETS OF ALL PIPES AND PAVED CHANNEL SECTIONS WHERE THE FLOW COULD CAUSE EROSION & SEDIMENT PROBLEM TO THE RECEIVING WATER BODY. SILT FENCES & HAY BALES ARE TO BE INSTALLED IMMEDIATELY DOWNSTREAM OF THE DISCHARING STRUCTURE AS SHOWN ON THE OUTLET PROTECTION DETAIL.
5. SEDIMENT BASIN: WILL BE CONSTRUCTED AT THE COMMON DRAINAGE LOCATIONS THAT SERVE AN AREA WITH 10 OR MORE DISTURBED ACRES AT ONE TIME, THE PROPOSED STORM WATER PONDS (OR TEMPORARY PONDS) WILL BE CONSTRUCTED FOR USE AS SEDIMENT BASINS. THESE SEDIMENT BASINS MUST PROVIDE A MINIMUM OF 3,600 CUBIC FEET OF STORAGE PER ACRE DRAINED UNTIL FINAL STABILIZATION OF THE SITE. THE 3,600 CUBIC FEET OF STORAGE AREA PER ACRE DRAINED DOES NOT APPLY TO FLOWS FROM OFFSITE AREAS AND FLOWS FROM ONSITE AREAS THAT ARE EITHER UNDISTURBED OR HAVE UNDERGONE FINAL STABILIZATION WHERE SUCH FLOWS ARE DIVERTED AROUND BOTH THE DISTURBED AREA AND THE SEDIMENT BASIN. ANY TEMPORARY SEDIMENT BASINS CONSTRUCTED MUST BE BACKFILLED AND COMPACTED IN ACCORDANCE WITH THE SPECIFICATIONS FOR STRUCTURAL FILL. ALL SEDIMENT COLLECTED IN PERMANENT OR TEMPORARY SEDIMENT TRAPS MUST BE REMOVED UPON FINAL STABILIZATION.

OTHER CONTROLS

WASTE DISPOSAL

WASTE MATERIALS
ALL WASTE MATERIALS EXCEPT LAND CLEARING DEBRIS SHALL BE COLLECTED AND STORED IN A SECURELY LIDDED METAL DUMPSTER. THE DUMPSTER WILL MEET ALL LOCAL AND STATE SOLID WASTE MANAGEMENT REGULATIONS. THE DUMPSTER WILL BE EMPTIED AS NEEDED AND THE TRASH WILL BE HAULED TO A STATE APPROVED LANDFILL. ALL PERSONNEL WILL BE INSTRUCTED REGARDING THE CORRECT PROCEDURE FOR WASTE DISPOSAL. NOTICES STATING THESE PRACTICES WILL BE POSTED AT THE CONSTRUCTION SITE BY THE CONSTRUCTION SUPERINTENDENT, THE INDIVIDUAL WHO MANAGES THE DAY-TO-DAY SITE OPERATIONS, WILL BE RESPONSIBLE FOR SEEING THAT THESE PROCEDURES ARE FOLLOWED.

HAZARDOUS WASTE
ALL HAZARDOUS WASTE MATERIALS WILL BE DISPOSED OF IN THE MANNER SPECIFIED BY LOCAL OR STATE REGULATION OR BY THE MANUFACTURER. SITE PERSONNEL WILL BE INSTRUCTED IN THESE PRACTICES AND THE SITE SUPERINTENDENT, THE INDIVIDUAL WHO MANAGES DAY-TO-DAY SITE OPERATIONS,WILL BE RESPONSIBLE FOR SEEING THAT THESE PRACTICES ARE FOLLOWED.

SANITARY WASTE
ALL SANITARY WASTE WILL BE COLLECTED FROM THE PORTABLE UNITS AS NEEDED TO PREVENT POSSIBLE SPILLAGE. THE WASTE WILL BE COLLECTED AND DEPOSED OF IN ACCORDANCE WITH STATE AND LOCAL WASTE DISPOSAL REGULATIONS FOR SANITARY SEWER OR SEPTIC SYSTEMS.

OFFSITE VEHICLE TRACKING
A STABILIZED CONSTRUCTION ENTRANCE WILL BE PROVIDED TO HELP REDUCE VEHICLE TRACKING OF SEDIMENTS. THE PAVED STREET ADJACENT TO THE SITE ENTRANCE WILL BE SWEPT DAILY TO REMOVE ANY EXCESS MUD, DIRT OR ROCK TRACKED FROM THE SITE. DUMP TRUCKS HAULING MATERIAL FROM THE CONSTRUCTION SITE WILL BE COVERED WITH A TARPAULIN.

INVENTORY FOR POLLUTION PREVENTION PLAN

THE MATERIALS OR SUBSTANCES LISTED BELOW ARE EXPECTED TO BE PRESENT ONSITE DURING CONSTRUCTION:

☐ Concrete	☐ Fertilizers	☐ Wood
☐ Asphalt	☐ Petroleum Based Products	☐ Masonry Blocks
☐ Tar	☐ Cleaning Solvents	☐ Roofing Materials
☐ Detergents	☐ Paints	☐ Metal Studs
☐ _____	☐ _____	☐ _____

SPILL PREVENTION

MATERIAL MANAGEMENT PRACTICES

THE FOLLOWING ARE THE MATERIAL MANAGEMENT PRACTICES THAT WILL BE USED TO REDUCE THE RISK OF SPILLS OR OTHER ACCIDENTAL EXPOSURE OF MATERIALS AND SUBSTANCES TO STORM WATER RUNOFF.

GOOD HOUSEKEEPING

THE FOLLOWING GOOD HOUSEKEEPING PRACTICES WILL BE FOLLOWED ONSITE DURING THE CONSTRUCTION PROJECT.

* AN EFFORT WILL BE MADE TO STORE ONLY ENOUGH PRODUCT REQUIRED TO DO THE JOB.

* ALL MATERIALS STORED ONSITE WILL BE STORED IN A NEAT, ORDERLY MANNER IN THEIR APPROPRIATE CONTAINERS AND, IF POSSIBLE, UNDER A ROOF OR OTHER ENCLOSURE.

* PRODUCTS WILL BE KEPT IN THEIR ORIGINAL CONTAINERS WITH THE ORIGINAL MANUFACTURER'S LABEL.

* SUBSTANCES WILL NOT BE MIXED WITH ONE ANOTHER UNLESS RECOMMENDED BY THE MANUFACTURER.

* WHENEVER POSSIBLE, ALL OF A PRODUCT WILL BE USED UP BEFORE DISPOSING OF THE CONTAINER.

* MANUFACTURER'S RECOMMENDATIONS FOR PROPER USE AND DISPOSAL WILL BE FOLLOWED.

* THE SITE SUPERINTENDENT WILL INSPECT DAILY TO ENSURE MATERIALS ONSITE RECEIVE PROPER USE AND DISPOSAL.

HAZARDOUS PRODUCTS

THESE PRACTICES ARE USED TO REDUCE THE RISKS ASSOCIATED WITH HAZARDOUS MATERIALS.

* PRODUCTS WILL BE KEPT IN ORIGINAL CONTAINERS UNLESS THEY ARE NOT RESEALABLE.
* ORIGINAL LABELS AND MATERIAL SAFETY DATA WILL BE RETAINED; THEY CONTAIN IMPORTANT PRODUCT INFORMATION.
* IF SURPLUS PRODUCT MUST BE DISPOSED OF, MANUFACTURER'S OR LOCAL AND STATE RECOMMENDED METHODS FOR PROPER DISPOSAL WILL BE FOLLOWED.

PRODUCT SPECIFIC PRACTICES

THE FOLLOWING PRODUCT SPECIFIC PRACTICES WILL BE FOLLOWED ONSITE:

PETROLEUM PRODUCTS

ALL ONSITE VEHICLES WILL BE MONITORED FOR LEAKS AND RECEIVE REGULAR PREVENTIVE MAINTENANCE TO REDUCE THE CHANCE OF LEAKAGE. PETROLEUM PRODUCTS WILL BE STORED IN TIGHTLY SEALED CONTAINERS WHICH ARE CLEARLY LABELED. ANY ASPHALT SUBSTANCES USED ONSITE WILL BE APPLIED ACCORDING TO THE MANUFACTURER'S RECOMMENDATIONS.

FERTILIZERS

FERTILIZERS USED WILL BE APPLIED ONLY IN THE MINIMUM AMOUNTS RECOMMENDED BY THE MANUFACTURER. ONCE APPLIED, FERTILIZER WILL BE WORKED INTO THE SOIL TO LIMIT EXPOSURE TO STORM WATER. STORAGE WILL BE IN A COVERED AREA. THE CONTENTS OF ANY PARTIALLY USED BAGS OF FERTILIZER WILL BE TRANSFERRED TO A SEALABLE PLASTIC BIN TO AVOID SPILLS.

PAINTS

ALL CONTAINERS WILL BE TIGHTLY SEALED AND STORED WHEN NOT REQUIRED FOR USE. EXCESS PAINT WILL NOT BE DISCHARGED TO THE STORM SEWER SYSTEM BUT WILL BE PROPERLY DISPOSED OF ACCORDING TO MANUFACTURERS' INSTRUCTIONS OR STATE AND LOCAL REGULATIONS.

CONCRETE TRUCKS

CONCRETE TRUCKS WILL NOT BE ALLOWED TO WASH OUT OR DISCHARGE SURPLUS CONCRETE OR DRUM WASH WATER ON THE SITE.

SPILL CONTROL PRACTICES

IN ADDITION TO THE GOOD HOUSEKEEPING AND MATERIAL MANAGEMENT PRACTICES DISCUSSED IN THE PREVIOUS SECTIONS OF THIS PLAN, THE FOLLOWING PRACTICES WILL BE FOLLOWED FOR SPILL PREVENTION AND CLEANUP:

MANUFACTURERS' RECOMMENDED METHODS FOR SPILL CLEANUP WILL BE CLEARLY POSTED ON SITE AND SITE PERSONNEL WILL BE MADE AWARE OF THE PROCEDURES AND THE LOCATION OF THE INFORMATION AND CLEANUP SUPPLIES.

MATERIALS AND EQUIPMENT NECESSARY FOR SPILL CLEANUP WILL BE KEPT IN THE MATERIAL STORAGE AREA ONSITE. EQUIPMENT AND MATERIALS WILL INCLUDE BUT NOT BE LIMITED TO BROOMS, DUST PANS, MOPS, RAGS, GLOVES, GOGGLES, LIQUID ABSORBENT (i.e. KITTY LITTER OR EQUAL), SAND, SAWDUST, AND PLASTIC AND METAL TRASH CONTAINERS SPECIFICALLY FOR THIS PURPOSE.

ALL SPILLS WILL BE CLEANED UP IMMEDIATELY AFTER DISCOVERY.
THE SPILL AREA WILL BE KEPT WELL VENTILATED AND PERSONNEL WILL WEAR APPROPRIATE PROTECTIVE CLOTHING TO PREVENT INJURY FROM CONTACT WITH A HAZARDOUS SUBSTANCE.

SPILL OF TOXIC OR HAZARDOUS MATERIAL WILL BE REPORTED TO THE APPROPRIATE STATE OR LOCAL GOVERNMENT AGENCY, REGARDLESS OF THE SIZE OF THE SPILL.

THE SPILL PREVENTION PLAN WILL BE ADJUSTED TO INCLUDE MEASURES TO PREVENT THIS TYPE OF SPILL FROM REOCCURRING AND HOW TO CLEAN UP THE SPILL IF THERE IS ANOTHER ONE. A DESCRIPTION OF THE SPILL, WHAT CAUSED IT, AND THE CLEANUP MEASURES WILL ALSO BE INCLUDED.
THE SITE SUPERINTENDENT RESPONSIBLE FOR THE DAY-TO-DAY SITE OPERATIONS, WILL BE THE SPILL PREVENTION AND CLEANUP COORDINATOR. HE/SHE WILL DESIGNATE AT LEAST ONE OTHER SITE PERSONNEL WHO WILL RECEIVE SPILL PREVENTION AND CLEANUP TRAINING. THESE INDIVIDUALS WILL EACH BECOME RESPONSIBLE FOR A PARTICULAR PHASE OF PREVENTION AND CLEANUP. THE NAMES OF RESPONSIBLE SPILL PERSONNEL WILL BE POSTED IN THE MATERIAL STORAGE AREA AND IF APPLICABLE, IN THE OFFICE TRAILER ONSITE.

MAINTENANCE/INSPECTION PROCEDURES

EROSION AND SEDIMENT CONTROL INSPECTION AND MAINTENANCE PRACTICES

THE FOLLOWING ARE INSPECTION AND MAINTENANCE PRACTICES THAT WILL BE USED TO MAINTAIN EROSION AND SEDIMENT CONTROLS.

* NO MORE THAN 10 ACRES OF THE SITE WILL BE DENUDED AT ONE TIME WITHOUT WRITTEN PERMISSION FROM THE ENGINEER.

* ALL CONTROL MEASURES WILL BE INSPECTED BY THE SUPERINTENDENT, THE PERSON RESPONSIBLE FOR THE DAY TO DAY SITE OPERATION OR SOMEONE APPOINTED BY THE SUPERINTENDENT, AT LEAST ONCE A WEEK AND FOLLOWING ANY STORM EVENT OF 0.25 INCHES OR GREATER.

* ALL TURBIDITY CONTROL MEASURES WILL BE MAINTAINED IN GOOD WORKING ORDER; IF A REPAIR IS NECESSARY, IT WILL BE INITIATED WITHIN 24 HOURS OF REPORT.

* BUILT UP SEDIMENT WILL BE REMOVED FROM SILT FENCE WHEN IT HAS REACHED ONE-THIRD THE HEIGHT OF THE FENCE.

MAINTENANCE/INSPECTION PROCEDURES(cont)

* SILT FENCE WILL BE INSPECTED FOR DEPTH OF SEDIMENT, TEARS, TO SEE IF THE FABRIC IS SECURELY ATTACHED TO THE FENCE POSTS, AND TO SEE THAT THE FENCE POSTS ARE FIRMLY IN THE GROUND.

* THE SEDIMENT BASINS WILL BE INSPECTED FOR THE DEPTH OF SEDIMENT, AND BUILT UP SEDIMENT WILL BE REMOVED WHEN IT REACHES 10 PERCENT OF THE DESIGN CAPACITY OR AT THE END OF THE JOB, WHICHEVER COMES FIRST.

* DIVERSION DIKES/SWALES WILL BE INSPECTED AND ANY BREACHES PROMPTLY REPAIRED.

* TEMPORARY AND PERMANENT SEEDING AND PLANTING WILL BE INSPECTED FOR BARE SPOTS, WASHOUTS, AND HEALTHY GROWTH.

* A MAINTENANCE INSPECTION REPORT WILL BE MADE AFTER EACH INSPECTION. A COPY OF THE REPORT FORM TO BE COMPLETED BY THE INSPECTOR IS ATTACHED.
THE REPORTS WILL BE KEPT ON SITE DURING CONSTRUCTION AND AVAILABLE UPON REQUEST TO THE OWNER, ENGINEER OR ANY FEDERAL, STATE OR LOCAL AGENCY APPROVING SEDIMENT AND AND EROSION PLANS, OR STORM WATER MANAGEMENT PLANS.
THE REPORTS SHALL BE MADE AND RETAINED AS PART OF THE STORM WATER POLLUTION PREVENTION PLAN FOR AT LEAST THREE YEARS FROM THE DATE THAT THE SITE IS FINALLY STABILIZED AND THE NOTICE OF TERMINATION IS SUBMITTED THE REPORTS SHALL IDENTIFY ANY INCIDENTS OF NON-COMPLIANCE.

* THE SITE SUPERINTENDENT WILL SELECT UP TO THREE INDIVIDUALS WHO WILL BE RESPONSIBLE FOR INSPECTIONS, MAINTENANCE AND REPAIR ACTIVITIES, AND FILLING OUT THE INSPECTION AND MAINTENANCE REPORT.

* PERSONNEL SELECTED FOR INSPECTION AND MAINTENANCE RESPONSIBILITIES WILL RECEIVE TRAINING FROM THE SITE. SUPERINTENDENT. THEY WILL BE TRAINED IN ALL THE INSPECTION AND MAINTENANCE PRACTICES NECESSARY FOR KEEPING THE EROSION AND SEDIMENT CONTROLS USED ONSITE IN GOOD WORKING ORDER.

NON-STORM WATER DISCHARGES

IT IS EXPECTED THAT THE FOLLOWING NON-STORM WATER DISCHARGES WILL OCCUR FROM THE SITE DURING THE CONSTRUCTION PERIOD:

NONE

CONTRACTOR'S CERTIFICATION

I CERTIFY UNDER PENALTY OF LAW THAT I UNDERSTAND THE TERMS AND CONDITIONS OF THE FDEP GENERIC PERMIT THAT AUTHORIZES THE STORM WATER DISCHARGES ASSOCIATED WITH INDUSTRIAL ACTIVITY FROM THE CONSTRUCTION SITE IDENTIFIED AS PART OF THIS CERTIFICATION.

RESPONSIBLE FOR DUTIES	BUSINESS NAME AND ADDRESS OF CONTRACTOR & ALL SUBS	SIGNATURE
GENERAL CONTRACTOR		
SUB-CONTRACTOR		
SUB-CONTRACTOR		
SUB-CONTRACTOR		
SUB-CONTRACTOR		

NOTE: SITE CONTRACTOR SHALL APPLY FOR AND OBTAIN A GENERIC PERMIT FROM THE FDEP AND PERFORM ALL REQUIREMENTS AND TASKS THEREOF.

REVISIONS

DATE

BB&T - COCONUT CREEK BRANCH
5700 COCONUT CREEK PARKWAY
MARGATE, FLORIDA 33063

STORMWATER POLLUTION PREVENTION PLAN

H & T CONSULTANTS, INC.
PLANNING – ENGINEERING
9310 OLDKINGS ROAD SOUTH, SUITE 1001
JACKSONVILLE , FLORIDA 32257
PHONE: 904–419–1001 FAX: 904–419–1004

DRAWN: JRT
DESIGN: JRT
CHECK: LT
DATE: OCT–31–14

PLATE
C-11

SHEET OF

NPDES LEGEND

SYMBOL	DESCRIPTION
X—(FF)—X	FILTER FABRIC FENCE
IPB	INLET PROTECTION BARRIER
CIP	CURB INLET PROTECTION BARRIER
(SC)	CONSTRUCTION EXIT – TYPE 3
CTW	CONCRETE TRUCK WASHOUT AREA

NOTES:

1. CONTRACTOR MUST ESTABLISH AN APPROPRIATE "CONCRETE TRUCK WASHOUT AREA".
2. ALL ON–SITE IMPROVEMENTS ARE TO BE OWNED AND MAINTAINED BY THE PROPERTY OWNER AND WILL NOT BE DEDICATED TO THE PUBLIC OR MAINTAINED BY THE PUBLIC.

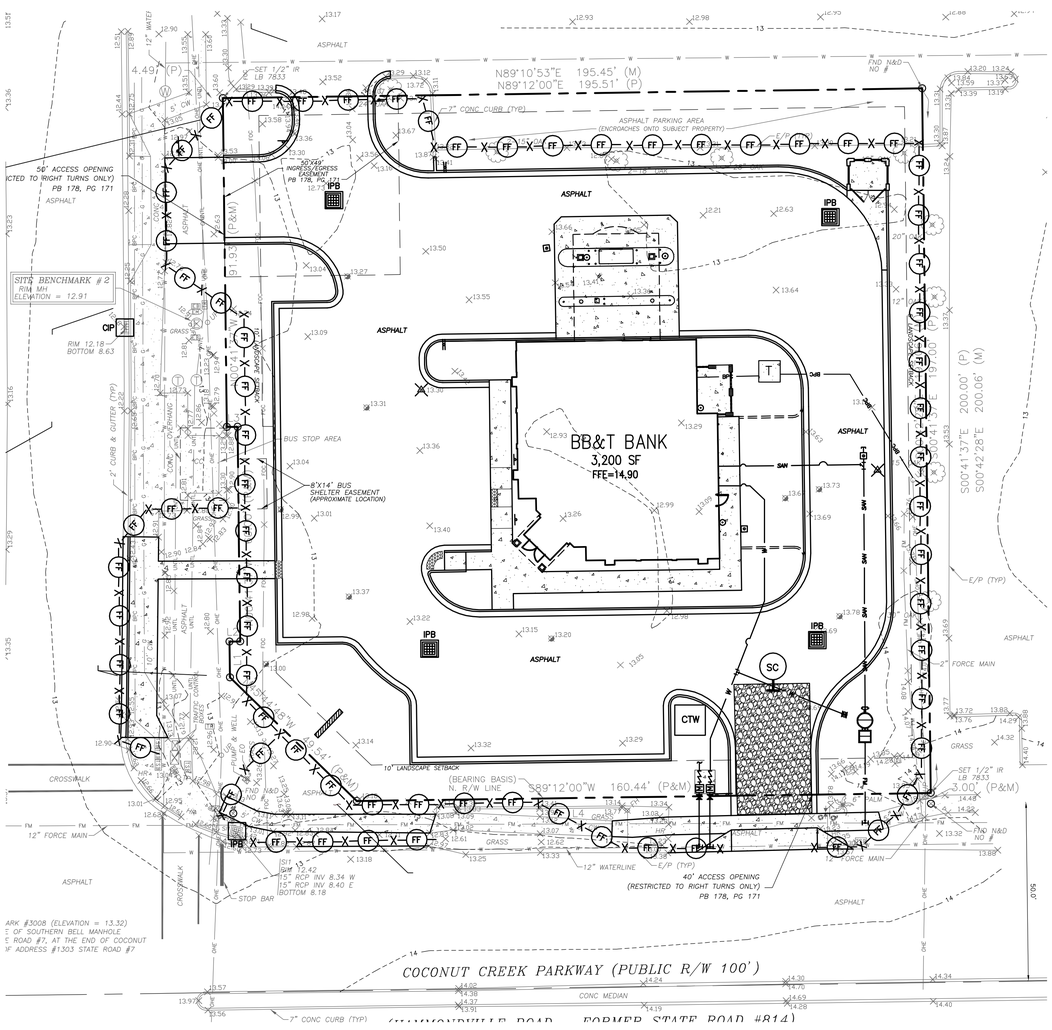

PLAN

SPECIFICATIONS:

contractor to install erosion controls as shown on this plan and/or other project specifications, all in compliance with local govering agencies, and epa. contractor shall file and give notice to the appropriate parties at a minimum 48 hours prior to construction. it is the obligation of the operator/contractor, subcontractor, and permittee to understand and comply with the NPDES general permit along with any required federal and/or local governing agencies.

The operator or operators involved with construction activities including clearing, grading, and excavating that result in land disturbance will need to implement pollutant control measures identified on this sheet (C–8A) and must comply with the requirements of NPDES General Permit and any local governing agency having jurisdiction concerning erosion and sedimentation control, along with any additional documents or amendments thereto:

Post a signed copy of the construction site notice and/or NOI at the construction site in a location where it is readily available for viewing by the general public, local, state, and federal authorities, prior to commencing construction activities, and maintain the notice in that location until completion of the construction activity

EXECUTION:

1. Construct rock pads for construction entrance/exit. This will be the first construction work on the project.
2. Install sediment barriers down slope from construction activities that disturb site soil;
3. Construct rock surface for temporary parking;
4. A rock filter dam will be placed at the outfall of any proposed detention/storm water quality pond as temporary outfall protection and provide filtration of larger soil particles.
5. Clear and grub the improvement areas. Sediment barriers will already be in place down slope;
6. Excavation and embankment to form drainage channels;
7. Excavation and embankment to form the building pad and pavement areas;
8. Underground Utilities – Sediment barriers will be utilized as required to bound the down slope side of utility construction and soil stockpiles;
9. Final Grading – Sediment barriers will be maintained down slope from disturbed soil during this operation;
10. Completion of on–site stabilization. (Contractor must obtain a minimum of 70% vegetation or the minimum requirement by local governing acency.)

The actual schedule for implementing pollutant control measures will be determined by project construction progress. Down slope protective measures must always be in place before soil is disturbed.

PURPOSE

The purpose of this procedure is to control erosion in order to reduce negative impacts on water and air quality. Proactive measures will address ongoing maintenance of a facility's site as well as provide for future construction and repairs to the site. Policy provisions will include restoring eroded soil areas and eliminating conditions that result in erosion or sedimentation.

1. SCOPE

This policy applies to all future construction activities and infrastructure repairs at the facility site in an effort to control erosion and sedimentation.

2. PERFORMANCE MATRIX

The plan must meet the following objectives:

A. Prevent loss of soil during construction by stormwater runoff and/or wind erosion, including protecting topsoil by stockpiling for reuse.
B. Prevent sedimentation of storm sewer or receiving streams.
C. Prevent polluting the air with dust and particular matter.
D. Building operations and maintenance activity will be logged to ensure that plan has been followed.

3. GOALS

Establish an erosion and sediment control policy that conforms to set practices set by the US EPA or other more stringent municipal standards. Provide a method for tracking and documenting that the policies have been followed.

4. PROCEDURE AND STRATEGIES

Procedure and strategies include a policy that mandates implementation of erosion and sediment control techniques and requires the techniques' inclusion into contract documents for any construction projects carried out on site. Consider employing strategies that address temporary and permanent landscaping issues and changes; erosion caused by pedestrian traffic; and stormwater overflow. Ongoing identification and elimination of these causes of erosion on sites are important components of addressing erosion and sedimentation.

5. RESPONSIBLE PARTY

A facility manager will be responsible for the ongoing implementation and will sign off the facility sedimentation and erosion policy.

6. TIME PERIOD

The duration of a facility's operations under current owner and operator.

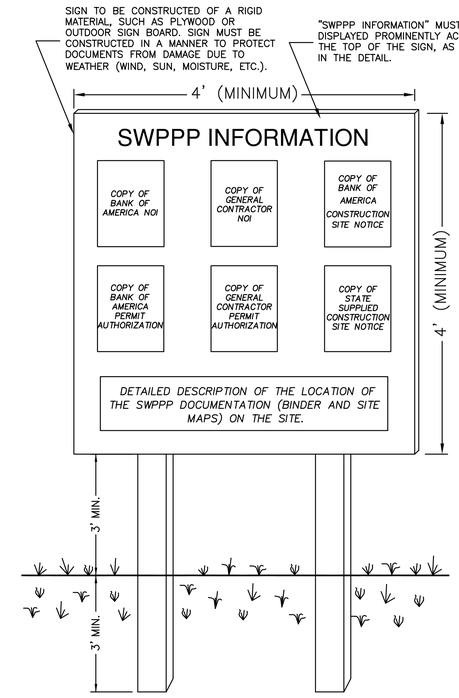

NOTES:

1) THE SWPPP INFORMATION SIGN MUST BE LOCATED NEAR THE CONSTRUCTION EXIT OF THE SITE, SUCH THAT IT IS ACCESSIBLE AND VIEWABLE BY THE GENERAL PUBLIC, BUT NOT OBSTRUCTING VIEWS AS TO CAUSE A SAFETY HAZARD.
2) ALL POSTED DOCUMENTS MUST BE MAINTAINED IN A CLEARLY READABLE CONDITION AT ALL TIMES THROUGHOUT CONSTRUCTION AND UNTIL THE NOTICE–OF–TERMINATION (NOT) IS FILED FOR THE PERMIT.
3) CONTRACTOR SHALL POST OTHER STORM WATER AND/OR EROSION AND SEDIMENT CONTROL RELATED PERMITS ON THE SIGN AS REQUIRED BY THE GOVERNING AGENCY.
4) SIGN SHALL BE LOCATED OUTSIDE OF PUBLIC RIGHT–OF–WAY AND EASEMENTS UNLESS APPROVED BY THE GOVERNING AGENCY.
5) CONTRACTOR IS RESPONSIBLE FOR ENSURING STABILITY OF THE SWPPP INFORMATION SIGN.

SWPPP INFORMATION SIGN

NTS

NORTH

N

20' 0 20'

SCALE: 1"=20'

REVISIONS	DATE

BB&T - COCONUT CREEK BRANCH

5700 COCONUT CREEK PARKWAY
MARGATE, FLORIDA 33063

BB&T

EROSION & SEDIMENTATION CONTROL PLAN

H & T CONSULTANTS, INC.
PLANNING – ENGINEERING
9310 OLD KINGS ROAD SOUTH, SUITE 1001
JACKSONVILLE , FLORIDA 32257
PHONE: 904–419–1001 FAX: 904–419–1004

H&T

JOB NO:

DRAWN: JRT

CHECK: LT

DATE: OCT–31–14

PLATE

C-12

SHEET OF

1. SET POSTS AT REQUIRED SPACING AND DEPTH. EXCAVATE A 6" x 6" TRENCH UPSLOPE ALONG THE LINE OF POSTS.

2. ATTACH FILTER FABRIC TO POSTS AND INSTALL IT INTO THE TRENCH. BACKFILL THE TRENCH AND COMPACT THE EXCAVATED SOIL.

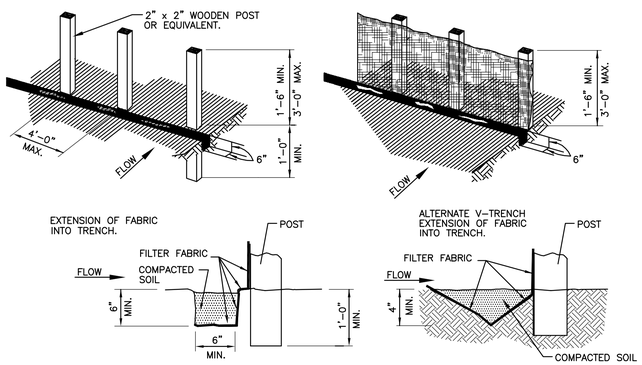

GENERAL NOTES:

1. SET POSTS AT 4-FEET MAXIMUM SPACING. IF FACTORY PREASSEMBLED FENCE WITH SUPPORT NETTING IS USED, SPACING OF POST MAY BE INCREASED TO 8 FEET MAXIMUM.
2. WHEN TWO SECTIONS OF FILTER FABRIC ADJOIN EACH OTHER, OVERLAP 6 INCHES AT THE POST, FOLD TOGETHER, AND ATTACH TO THE POSTS.
3. REMOVE SEDIMENT DEPOSITS WHEN SILT DEPTH REACHES ONE-THIRD OF THE HEIGHT OF THE FENCE.

FILTER FABRIC FENCE

X—(FF)—X

SYMBOL

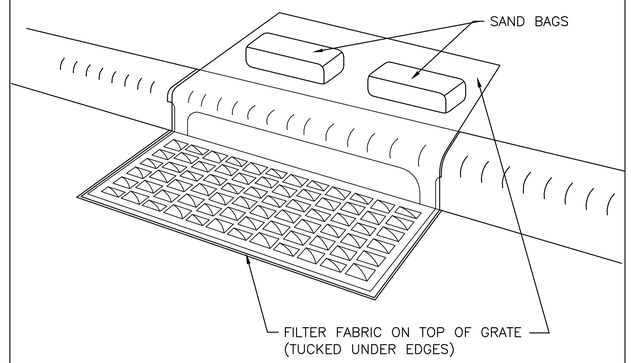

INLET SOCK DETAIL

CIP

SYMBOL

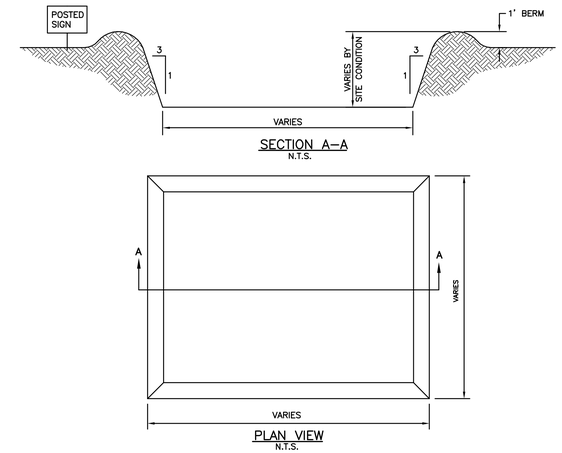

SECTION A-A
N.T.S.

PLAN VIEW
N.T.S.

GENERAL NOTES:

1. POST A SIGN READING "CONCRETE WASH OUT PIT" NEXT TO THE PIT.
2. VERBALLY INSTRUCT THE CONCRETE TRUCK DRIVERS WHERE THE PIT IS AND TO WASH OUT THEIR TRUCKS IN THE PIT AND NO WHERE ELSE.
3. UNPON THE CONCRETE SETTING UP (CURING, DRYING OUT), THE CONCRETE WASTE SHALL BE REMOVED FROM THE PROJECT SITE AND DISPOSED OF PROPERLY BY THE CONTRACTOR. AFTER REMOVAL OF THE CONCRETE WASTE, THE WASH OUT PIT SHALL BE FILLED WITH CLEAN FILL MATERIAL AND COMPACTED TO IN-SITU CONDITIONS, OR AS DIRECTED BY THE PROJECT SPECIFICATIONS.
4. CONCRETE WASH OUT PITS SHALL NOT BE LOCATED DIRECTLY ADJACENT TO, NOR AT ANY TIME DRAIN INTO THE STORM SEWER SYSTEM OR ANY OTHER SWALE, DITCH, OR WATERWAY.
5. CONSTRUCT ENTRY ROAD AND BOTTOM OF WASHOUT AREA TO SUPPORT EXPECTED LOADINGS FROM TRUCKS EQUIPMENT.

CONCRETE TRUCK WASHOUT AREA

CTW

SYMBOL

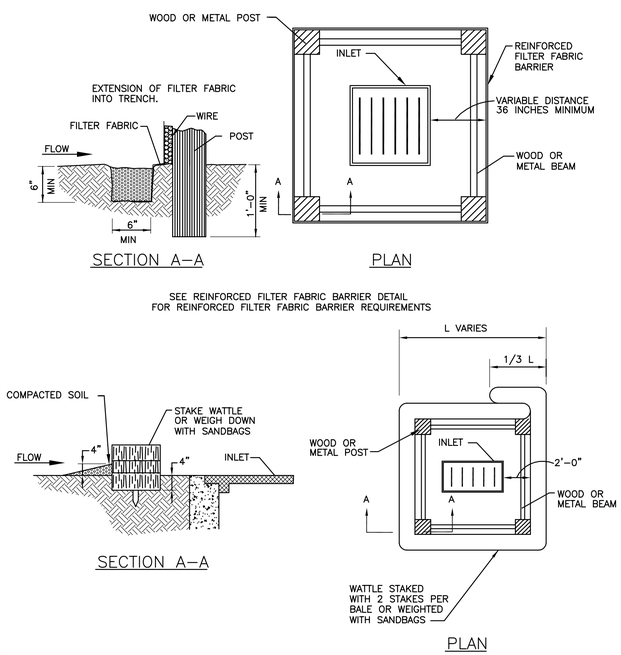

SECTION A-A

PLAN

NOTE:
TYPICALLY STRAW BALES ARE NOT RECOMMENDED FOR INLET PROTECTION BARRIERS.

INLET PROTECTION BARRIERS

IPB

SYMBOL

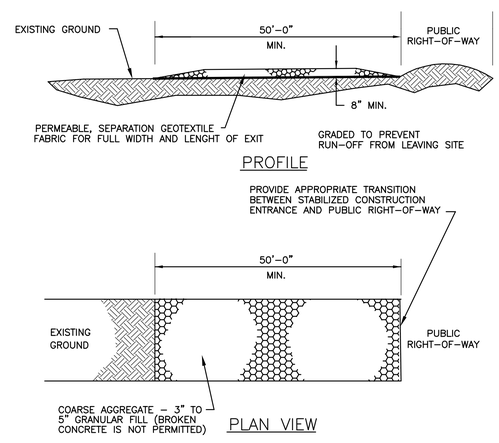

PROFILE

PLAN VIEW

GENERAL NOTES:

1. MINIMUM LENGTH IS AS SHOWN ON CONSTRUCTION DRAWINGS OR 50 FEET, WHICHEVER IS MORE.
2. CONSTRUCT AND MAINTAIN CONSTRUCTION EXIT WITH CONSTANT WIDTH ACROSS ITS LENGTH, INCLUDING ALL POINTS OF INGRESS OR EGRESS.
3. UNLESS SHOWN ON THE CONSTRUCTION DRAWINGS, STABILIZATION FOR OTHER AREAS WILL HAVE THE SAME AGGREGATE THICKNESS AND WIDTH REQUIREMENTS AS THE STABILIZED CONSTRUCTION EXIT.
4. WHEN SHOWN ON THE CONSTRUCTION DRAWINGS, WIDEN OR LENGTHEN STABILIZED AREA TO ACCOMMODATE A TRUCK WASHING AREA. PROVIDE OUTLET SEDIMENT TRAP FOR THE TRUCK WASHING AREA.
5. PROVIDE PERIODIC TOP DRESSING WITH ADDITIONAL COARSE AGGREGATE TO MAINTAIN THE REQUIRED DEPTH OR WHEN SURFACE BECOMES PACKED WITH MUD.
6. PERIODICALLY TURN AGGREGATE TO EXPOSE A CLEAN DRIVING SURFACE.
7. ALTERNATIVE METHODS OF CONSTRUCTION INCLUDE
   -CEMENT STABILIZED SOIL: COMPACTED CEMENT STABILIZED SOIL, LIMESTONE AGGREGATE, OR OTHER FILL MATERIAL IN AN APPLICATION OF THICKNESS OF 8 INCHES.
   -WOOD MATS: OAK OR OTHER HARDWOOD TIMBERS PLACED EDGE TO EDGE AND ACROSS SUPPORT WOODEN BEAMS WHICH ARE PLACED ON TOP OF EXISTING SOIL IN AN APPLICATION THICKNESS OF 6 INCHES.
   -STEEL MATS: PERFORATED MATS PLACED ACROSS PERPENDICULAR SUPPORT MEMBERS.

STABILIZED CONSTRUCTION ACCESS

SC

SYMBOL

POLLUTION PREVENTION NOTES:

- EROSION AND SEDIMENT CONTROL BMPS IN ADDITION TO THOSE PRESENTED ON THE PLANS AND OUTLINED IN THE EROSION AND SEDIMENT CONTROL PLAN (ECP), BEST MANAGEMENT PRACTICES (BMP) PLAN, OR STORM WATER POLLUTION PREVENTION PLAN (SWPPP) SHALL BE IMPLEMENTED AS NECESSARY TO PREVENT TURBID DISCHARGES FROM FLOWING ONTO ADJACENT PROPERTIES OR ROADWAYS, OFF SITE STORM WATER CONVEYANCES OR RECEIVING WATERS, OR ON SITE WETLANDS AND SURFACE WATERS. BMPS SHALL BE DESIGNED, INSTALLED, AND MAINTAINED BY THE SITE OPERATOR TO ENSURE THAT OFF SITE SURFACE WATER QUALITY REMAINS CONSISTENT WITH STATE AND LOCAL REGULATIONS. [THE OPERATOR IS THE ENTITY THAT OWNS OR OPERATES THE CONSTRUCTION ACTIVITY AND HAS AUTHORITY TO CONTROL THOSE ACTIVITIES AT THE PROJECT NECESSARY TO ENSURE COMPLIANCE.]
- OFF SITE SURFACE WATER DISCHARGES, DISCHARGES TO THE MS4, OR DISCHARGES TO ONSITE WETLANDS OR SURFACE WATERS WITH TURBIDITY IN EXCESS OF 29 NEPHELOMETRIC TURBIDITY UNITS (NTUS) ABOVE BACKGROUND LEVEL SHALL BE IMMEDIATELY CORRECTED. SUCH INCIDENTS SHALL BE REPORTED TO AIR & WATER QUALITY WITHIN 24 HOURS OF THE OCCURRENCE (PH: 941.861.5000; FAX: 941.861.0986). THE REPORT SHALL INCLUDE THE CAUSE OF THE DISCHARGE AND CORRECTIVE ACTIONS TAKEN.
- THE OPERATOR SHALL ENSURE THAT ADJACENT PROPERTIES ARE NOT IMPACTED BY WIN EROSION, OR EMISSIONS OF UNCONFINED PARTICULATE MATTER IN ACCORDANCE WITH RULE 62-296.320 (4)(C)1, F.A.C., BY TAKING APPROPRIATE MEASURES TO STABILIZE AFFECTED AREAS.
- FUEL AND OTHER PETROLEUM PRODUCT SPILLS THAT ENTER STORM WATER DRAINS OR WATER BODIES, OR FUEL AND OTHER PETROLEUM PRODUCT SPILLS THAT ARE IN EXCESS OF 25 GALLONS SHALL BE CONTAINED, CLEANED UP, AND IMMEDIATELY REPORTED TO AIR & WATER QUALITY (PH: 941.861.5000; FAX: 941.861.0986). SMALLER GROUND SURFACE SPILLS SHALL BE CLEANED UP AS SOON AS PRACTICAL.
- IN CONTAMINATED SOIL AND/OR GROUNDWATER IS DISCOVERED DURING DEVELOPMENT OF THE SITE, ALL ACTIVITY IN THE VICINITY OF THE CONTAMINATION SHALL IMMEDIATELY CEASE, AND AIR & WATER QUALITY SHALL BE CONTACTED (PH: 941.861.5000; FAX: 941.861.0986).
- NATIONAL POLLUTANT DISCHARGE ELIMINATION SYSTEM:
  - NPDES CONSTRUCTION GENERIC PERMIT COVERAGE SHALL BE OBTAINED AT LEAST 48 HOURS IN ADVANCE OF CONSTRUCTION COMMENCEMENT IN ACCORDANCE WITH RULE 62.621.300(4)(A), F.A.C.
  - A COPY OF THE CERTIFIED NPDES NOI, OR A COPY OF THE FDEP COVERAGE CONFIRMATION LETTER SHALL BE POSTED AT THE SITE IN ACCORDANCE WITH CITY OF ORLANDO CODES
  - THE SWPPP SHALL BE CERTIFIED IN ACCORDANCE WITH RULE 62-621.300(4)(A)PART V.D.6, F.A.C., AND A COPY OF THE CERTIFIED DOCUMENT SHALL BE SUBMITTED TO AIR & QUALITY AT LEAST 48 HOURS PRIOR TO THE COMMENCEMENT OF CONSTRUCTION PER CITY OF ORLANDO CODE.
  - A COPY OF THE SWPPP, AND COPIES OF THE INSPECTION AND MAINTENANCE RECORDS SHALL BE MAINTAINED AT THE PROJECT SITE, AND SHALL BE READILY AVAILABLE TO CITY OR STATE INSPECTORS PER THE CITY OF ORLANDO CODE.
- THE DISCHARGE OF GROUNDWATER PRODUCED THROUGH DEWATERING, TO SURFACE WATERS, OR TO ANY PORTION OF THE MS4 WILL REQUIRE SEPARATE PERMITTING FROM THE FLORIDA DEPARTMENT OF ENVIRONMENTAL PROTECTION (DEP). PERMIT(S) SHALL BE OBTAINED PRIOR TO THE COMMENCEMENT OF DEWATERING. ANALYTICAL RESULTS FROM PRE-DISCHARGE TESTING SHALL BE PROVIDED TO AIR & WATER QUALITY PURSUANT TO REQUIREMENTS OF THE CITY OF ORLANO CODES.

REVISIONS	DATE

BB&T - COCONUT CREEK BRANCH
5700 COCONUT CREEK PARKWAY
MARGATE, FLORIDA 33063

BB&T

EROSION & SEDIMENTATION CONTROL DETAILS

H & T CONSULTANTS, INC.
PLANNING - ENGINEERING
9310 OLD KINGS ROAD SOUTH, SUITE 1001
JACKSONVILLE , FLORIDA 32257
PHONE: 904-419-1001 FAX: 904-419-1004

H&T

JOB NO:

DRAWN: JRT

CHECK: LT

DATE: OCT-31-14

PLATE

C-13

SHEET OF

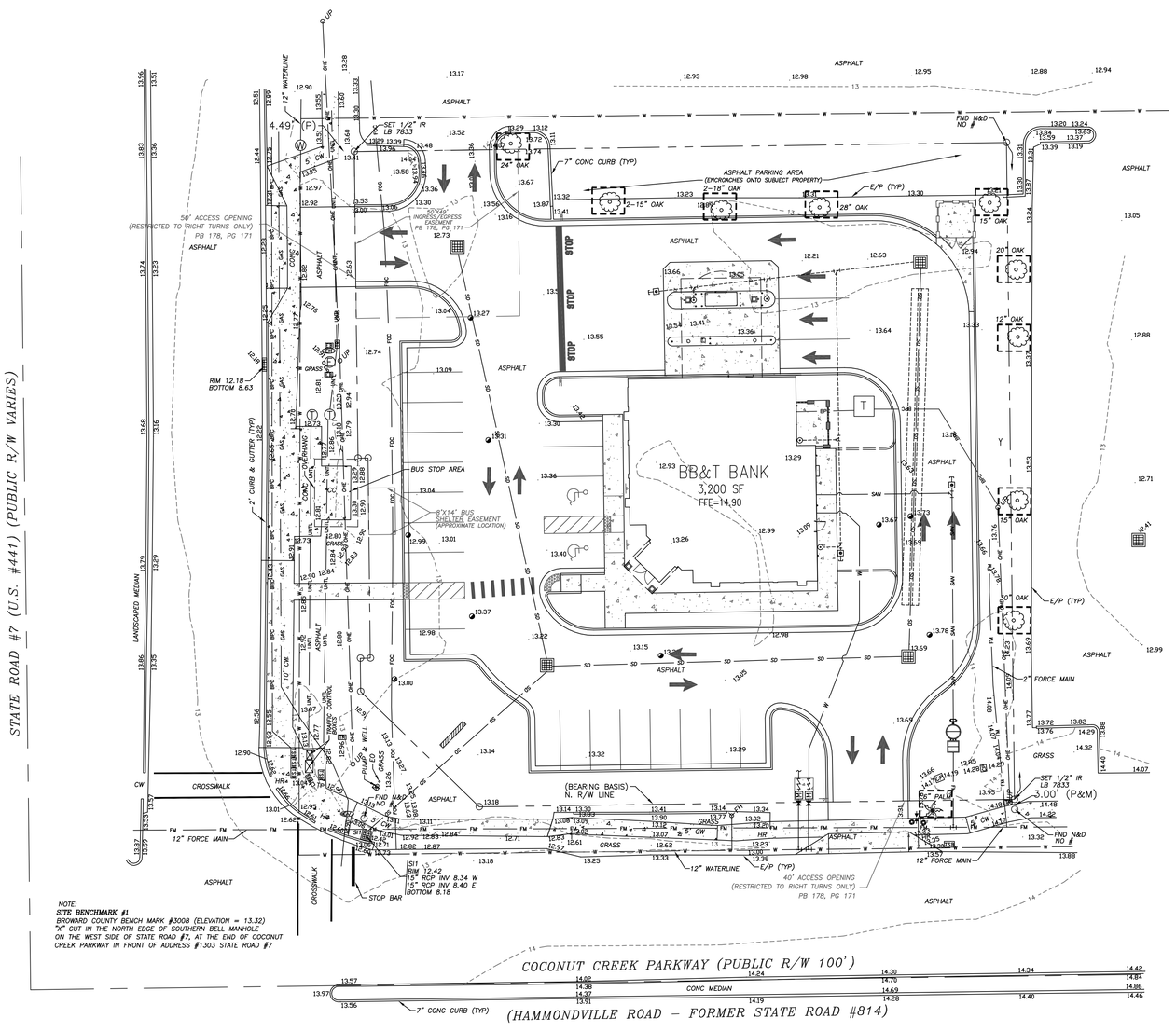

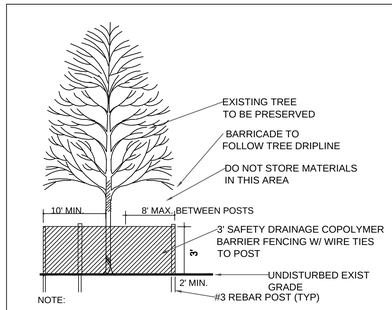

NOTE:

1) THE TEMPORARY BARRIER SHALL BE AT LEAST THREE (3') FEET HIGH. SHALL BE PLACED AT LEAST TEN (10') AWAY FROM THE BASE OF ANY TREE. SHALL INCLUDE AT LEAST FIFTY (50) PERCENT OF THE AREA UNDER THE DRIPLINE OF ANY PROTECTED TREE OR TREES. THE BARRIER SHALL BE CONSIT OF EITHER A WOOD FENCE OR WITH 2X4 POSTS PLACED A MAXIMUM OF EIGHT (8) FEET APART WITH A 2X4 MINIMUM TOP RAIL, OR A TEMPORARY WIRE MESH FENCE, OR OTHER SIMILAR BARRIER WHICH WILL LIMIT ACCESS TO THE PROTECTED AREA.
2) TREE PROTECTION, PRE-CONSTRUCTION BARRIERS: PRIOR TO ANY CLEARING AND GRUBBING, BARRIERS SHALL BE ERECTED ALONG THE "LIMITS OF CONSTRUCTION" AS SHOWN ON THE LANDSCAPE PLANS TO PROTECT EXISTING TREES TO REMAIN.
3) PRIOR TO FINAL INSPECTION AND ACCEPTANCE BY OWNER, PRUNE REMAINING TREES TO REMOVE DEAD, DAMMAGED OR RUBBING LIMBS TO ESTABLISH A UNIFORM SHAPE AND TO CLEAR FOR PEDESTRIAN AND VEHICULAR TRAFFIC.

TREE BARRICADE APPROVAL: OBTAIN CITY APPROVAL OF TREE BARRICADES BEFORE BEGINNING CLEARING OPERATIONS OR SITE DEVELOPMENT.

TREE PROTECTION DETAIL

NOT TO SCALE

KEY:

TREES TO REMAIN WITH TREE PROTECTION BARRIER. SEE DETAIL THIS SHEET.

NORTH

SCALE: 1"=20'

A & K LAND PLANNING & DESIGN Inc.
PHONE: (904) 476-9692
2621 SUNRISE RIDGE LANE, JACKSONVILLE, FLORIDA 32211
E-MAIL: AKLANDPLANNING@COMCAST.NET
Kristoffer Reed RLA
#LA6667112

REVISIONS

DATE

BB&T – COCONUT CREEK BRANCH
5700 COCONUT CREEK PARKWAY
MARGATE, FLORIDA 33063

BB&T

TREE PROTECTION PLAN

H & T CONSULTANTS, INC.
PLANNING – ENGINEERING
9310 OLD KINGS ROAD SOUTH, SUITE 1001
JACKSONVILLE , FLORIDA 32257
PHONE: 904-419-1001 FAX: 904-419-1004

H&T

JOB NO: 2014.34

DRAWN: K.S.R.

CHECK: LT

DATE: 10/29/14

PLATE

L–1

SHEET OF

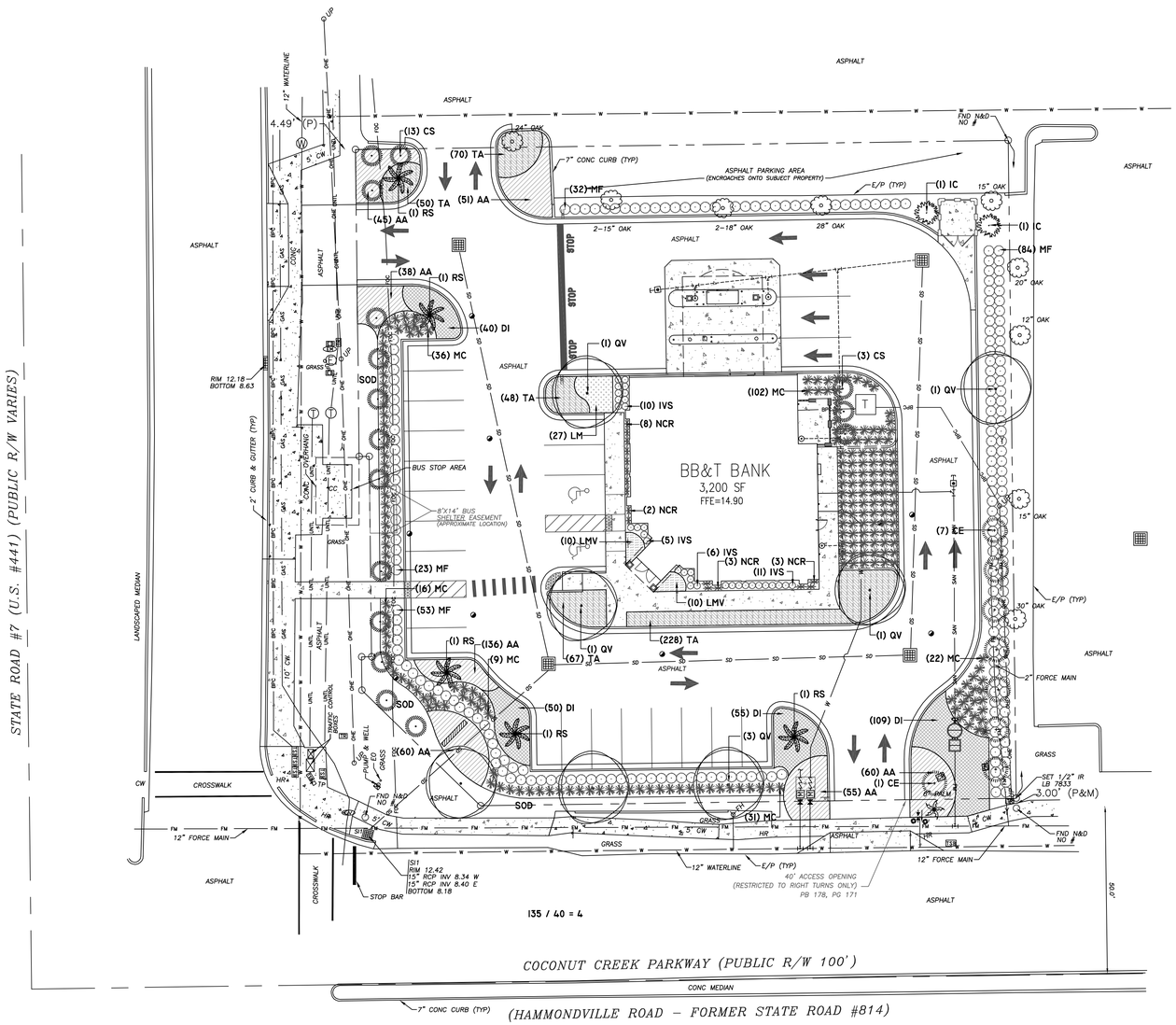

CITY CODE REQUIREMENTS

NORTH PERIMETER BUFFER
1 CANOPY TREE / 75 L.F. & NO MORE THAN 30% SOD
170 L.F. = 3 CANOPY TREES REQUIRED
3 CANOPY TREES PROVIDED

SOUTH PERIMETER BUFFER
1 CANOPY TREE / 40 L.F. & NO MORE THAN 50% SOD
135 L.F. = 4 CANOPY TREES REQUIRED
3 CANOPY TREES & 1 CATEGORY 2 TREE PROVIDED (OHE)

EAST PERIMETER BUFFER
1 CANOPY TREE / 75 L.F. & NO MORE THAN 50% SOD
197 L.F. = 3 CANOPY TREES REQUIRED OR 1 CATEGORY 3 TREE / 12 L.F. DUE TO OHE
1 CANOPY TREES PROVIDED & 7 CATEGORY 3 TREES PROVIDED (OHE)

WEST PERIMETER BUFFER
1 CANOPY TREE / 40 L.F. & NO MORE THAN 50% SOD
180 L.F. = 5 CANOPY TREES REQUIRED OR 15 CATEGORY 3 TREE / 12 L.F. DUE TO OHE
1 CANOPY TREES PROVIDED & 13 CATEGORY 3 TREES PROVIDED (OHE)

20 S.F. FOR EACH PARKING SPACE
22 SPACES X 20 S.F. = 440 S.F.
1 SHADE TREE PER 200 S.F. = 3 TREES

CANOPY TREE REQUIREMENT FOR LOT 12%
37,719 X 12% = 4,527 S.F.
CATEGORY 1 TREE = 300 S.F.
CATEGORY 1 TREE = 15 REQUIRED
7 CANOPY TREES PROVIDED & 31 CATEGORY 3 TREES PROVIDED

FLORIDA FRIENDLY LANDSCAPE PLAN

NORTH
N
20' 0 20'
SCALE: 1"=20'

A & K LAND PLANNING & DESIGN Inc.
PHONE: (904) 476-9692
2621 SUNRISE RIDGE LANE, JACKSONVILLE, FLORIDA 32211
E-MAIL: AKLANDPLANNING@COMCAST.NET
Kristoffer Reed RLA
#LA6667112

REVISIONS
DATE

BB&T – COCONUT CREEK BRANCH
5700 COCONUT CREEK PARKWAY
MARGATE, FLORIDA 33063

BB&T

LANDSCAPE PLAN

H & T CONSULTANTS, INC.
PLANNING – ENGINEERING
9310 OLD KINGS ROAD SOUTH, SUITE 1001
JACKSONVILLE , FLORIDA 32257
PHONE: 904-419-1001 FAX: 904-419-1004
H&T

JOB NO: 2014.34
DRAWN: K.S.R.
CHECK: LT
DATE: 10/29/14
PLATE
L-2
SHEET OF

A & K LAND PLANNING & DESIGN
Inc.
PHONE: (904) 476-9692
2621 SUNRISE RIDGE LANE, JACKSONVILLE, FLORIDA 32211
E-MAIL: AKLANDPLANNING@COMCAST.NET
Kristoffer Reed RLA
#LA6667112

General Notes and Specifications

1. Prior to construction the landscape contractor shall be responsible for locating all underground utilities and shall avoid damage to all utilities during the course of the work. The landscape contractor is responsible for repairing any and all damage to utilities, structures, site appurtenances, etc., which occurs as a result of the landscape construction.
2. When conditions detrimental to plant growth are encountered, such as rubble fill, adverse drainage conditions or obstructions, notify owner's representative before planting.
3. All plants must be healthy, vigorous material, free of pests and disease.
4. All trees, palms, and shrubs shall be highest grade Dept. of Agriculture and Consumer Services.
5. All plant material must be approved by the Landscape Architect before the plant material is installed.
6. Any changes to the plant material (size, type, etc..), irrigation or any other deviations from the plans must be approved by the Landscape Architect prior to the change being implemented by the contractor. The contractor must provide written proof of authorization for any changes.
7. All plants to be field grown or container grown as indicated on plant list. Store plants in shade and protect from weather. If plants cannot be planted immediately upon delivery, properly protect them with soil, wet peat moss, or,in a manner acceptable to owner's rep. Do not remove container grown stock from containers until planting time. Protect roots of plant from drying or other possible injury. Keep plant ball moist at all times.
8. All plants shall be trianguiar spaced.
9. Obtain agronomic soils test for all planting areas and tree pits prior to excavation of tree pits. Tests shall be performed by an approved soils testing laboratory and shall include fertility and suitability analysis with written recommendations for soil amendments, fertilizer and chemical conditioner application rates for soil preparation, planting backfill mix, and post maintenance fertilization program. Submit a copy of soils report to owner's rep. and landscape architect.
10. Add soil amendments as recommended by soil test in quantities necessary to bring soil mixture to pH rating of between 5.5 and 6.0. Minerals used for pH correction shall be commercially produced for this purpose.
11. All plants and planting areas must be completely mulched as specified with four (4) inches of organic mulch. Provide 4" minimum clearance of mulch from all shrub trunks and 6" minimum clearance from all tree trunks.
12. The landscape contractor is responsible for verifying all quantities shown on these plans, before pricing the work.
13. The planting shall be done in accordance with acceptable horticultural practices. This is to include proper planting mix, plant and tree pit preparation, pruning, staking or guying, wrapping, spraying, fertilization, planting, and adequate maintenance throughout the required maintenance period.
14. The landscape contractor is responsible for fully maintaining all planting (including but not limited to: pruning, watering, fertilizing, cultivating, weeding, mowing, mulching, tightening and repairing of guys, resetting plants to proper grade or upright position, restoration of plant saucer, and furnishing and applying such sprays as necessary to keep free of insects and diseases. The landscape contractor's responsibility for maintenance (exclusive of replacement within the guarantee period) shall terminate one year from the date of final acceptance by owner and landscape architect.
15. All trees, palms, shrubs and plant material shall be warranted for a period of one year after date of completion and acceptance of the entire project Final acceptance of all landscaping under this contract shall constitute the beginning of the guarantee period. Replace, in accordance with the drawings and specifications, all plants that are dead or, as determined by the owner's representative, are in an unhealthy or unsightly condition, and have lost their natural shape due to dead branches, or other causes due to the contractor's negligence. Furnish and plant replacements which comply with requirements shown and specified. Warrant all replacement plants for one year after installation. The cost of such replacement(s) is at the contractor's expense.
16. All plants are subject to approval by the owner's representative. Prior to planting, all trees and palms must be approved by the owner or owner's rep.
17. Standards set forth in "American Standard for Nursery Stock" represent guideline specifications only and shall constitute minimum quality requirements for plant material.
18. At the conclusion of this planting, if the owner's rep. or owner has reason to believe that the plants are not of the specified grade, he will request a re-grading or inspection, and such evidence will be the basis for requesting replacement of plants and for legal or other action according to law, should this become necessary.
19. All planting beds to be treated with pre-emergent weed control prior to planting.
20. Contractor is to check the site weekly to insure all plant material is healthy and well watered.
21. All disturbed areas to be sodded.

PLANTING SCHEDULE:

QTY	KEY	BOTANICAL NAME	COMMON NAME	GRADE	HEIGHT	SPREAD	REMARKS
TREES:							
8	CE	CONOCARPUS ERECTUS	SILVER BUTTONWOOD	FLA.#1	10'HT.	6'SPD.	STANDARD 12' HT. x 5' SPREAD, 5' CLEAR TRUNK
16	CS	CALLISTEMON SP.	BOTTLEBRUSH	FLA.#1	10'HT.	6'SPD.	STANDARD 12' HT. x 5' SPREAD, 5' CLEAR TRUNK
2	IC	ILEX CASSINE	DAHOON HOLLY	FLA.#1	10'HT.	6'SPD.	FULL TO GROUND
7	QV	QUERCUS VIRGINIANA	LIVE OAK	FLA.#1	15' HT O.A.	8' SPD.	4" CAL. MIN., 5' CLEAR TRUNK
5	RS	ROYSTONIA SP.	ROYAL PALM	FLA.#1	-	-	12' - 14' GW, STRAIGHT
SHRUBS & GROUND COVER:							
445	AA	AGAPANTHUS AFRICANUS	AGAPANTHUS	FLA.#1	12"HT.	12"SPD.	FULL PLANT, 1 GAL., 24" o.c.
255	DI	DIETES IRIDIOIDES	AFRICAN IRIS	FLA.#1	12"HT.	12"SPD.	FULL PLANT, 1 GAL., 24" o.c.
32	IVS	ILEX VOMITORIA 'SCHILLINGS'	SCHILLINGS HOLLY	FLA.#1	12"HT.	12"SPD.	FULL PLANT @ 2' O.C., 3 GAL.
27	LM	LIRIOPE MUSCARI	LIRIOPE	FLA.#1	12"HT.	12"SPD.	FULL PLANT, 1 GAL., 24" o.c.
27	LMV	LIRIOPE MUSCARI 'VARIEGATA'	AZTEC GRASS	FLA.#1	12"HT.	12"SPD.	FULL PLANT, 1 GAL., 24" o.c.
216	MC	MUHLENBERGIA CAPILLARIS	MUHLY GRASS	FLA.#1	24"HT	24"SPD.	FULL PLANT @ 3' O.C., 3 GAL.
192	MF	MYRCIANTHES FRAGRANS	SIMPSONS STOPPER	FLA.#1	24"HT	24"SPD.	FULL PLANT @ 3' O.C., 3 GAL.
16	NCR	NEOMERICA CAERULEA 'REGINA'	GIANT APOSTLES IRIS	FLA.#1	24"HT	24"SPD.	FULL PLANT @ 3' O.C., 3 GAL.
463	TA	TRACHELOSPERMUM ASIATICUM	JASMINE	FLA.#1	12"HT.	12"SPD.	FULL PLANT @ 18" O.C., 1 GAL.
T.B.D.	SQ. FT.	SOD - ST.AUGUSTINE 'FLORITAM' VARIETY					

GENERAL NOTES AND SPECIFICATIONS
1. CONTRACTOR TO VERIFY ALL QUANTITIES
2. ALL PLANT MATERIAL TO BE FLORIDA #1

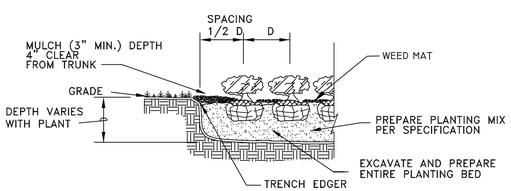

SHRUB & GROUNDCOVER PLANTING DETAIL

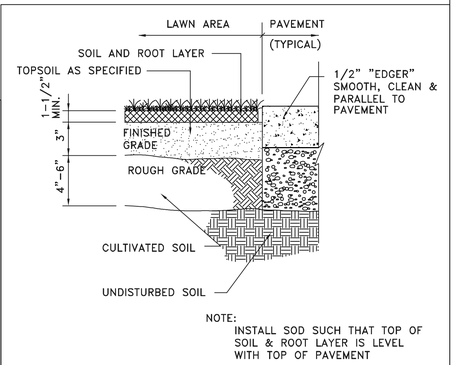

SOD DETAIL

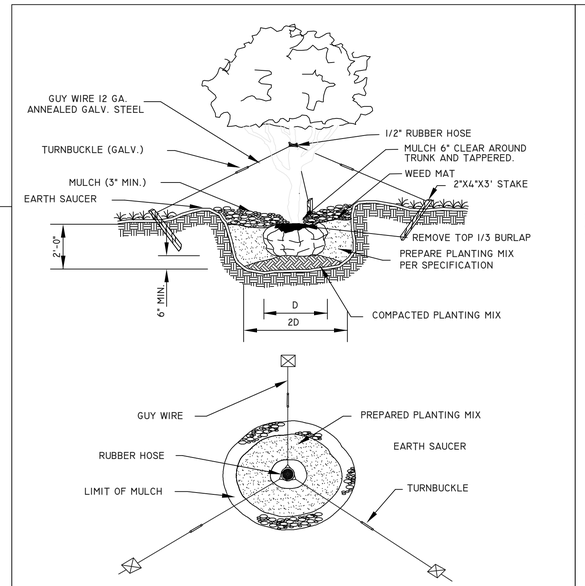

TREE PLANTING DETAIL

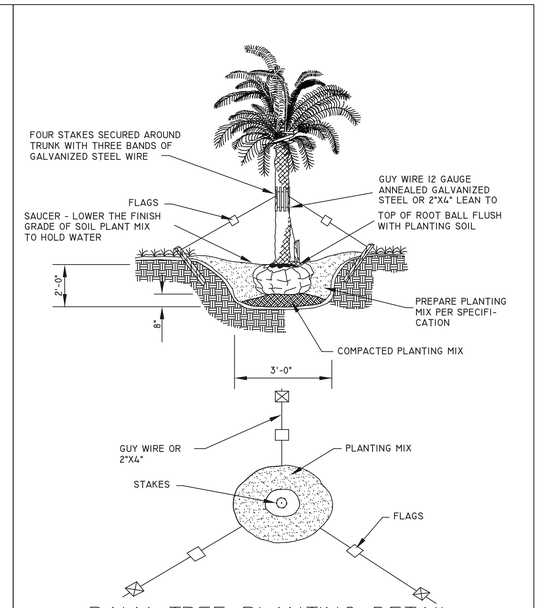

PALM TREE PLANTING DETAIL

REVISIONS
DATE

BB&T - COCONUT CREEK BRANCH
5700 COCONUT CREEK PARKWAY
MARGATE, FLORIDA 33063

BB&T

LANDSCAPE DETAILS

H & T CONSULTANTS, INC.
PLANNING - ENGINEERING
9310 OLD KINGS ROAD SOUTH, SUITE 1001
JACKSONVILLE , FLORIDA 32257
PHONE: 904-419-1001 FAX: 904-419-1004
H&T

JOB NO: 2014.34
DRAWN: K.S.R.
CHECK: LT
DATE: 10/29/14
PLATE
L-3
SHEET OF

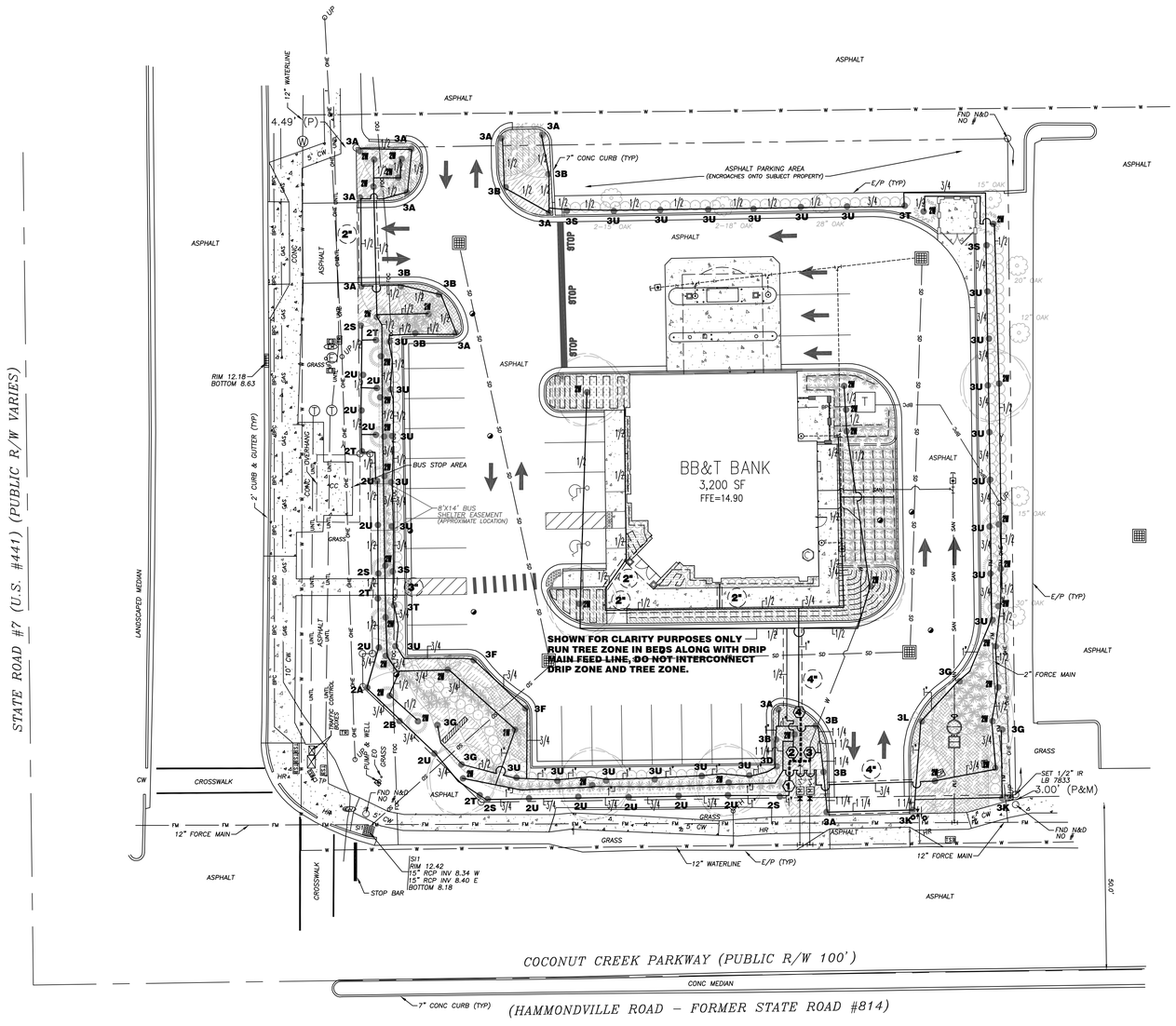

VALVE SCHEDULE

ZONE	GPM	IN / HR	PSI	RUN TIME	TYPE
1	8.26	0.45	40.0	45 MIN	LAWN
2	19.00	0.45	40.0	20 min	TREE
3	25.02	0.45	40.0	45 MIN	SHRUB
4	9.87	0.45	40.0	45 MIN	DRIP

RUN TIME BASED ON 3/4" PER HOUR

SPRINKLER LIST

QUANTITY	I.D.	MANUFACTURER	SPECIFICATION	P.S.I.	G.P.M.	IN/HR	RADIUS
INST 6" POP-UP SPRINKLER							
1	2A	Hunter	PROS-06-CV-MP1000-90	40	0.19	0.45	ADJUSTABLE
1	2B	Hunter	PROS-06-CV-MP1000-180	40	0.74	0.45	ADJUSTABLE
4	2S	Hunter	PROS-06-CV-MPLCS515	40	0.22	0.45	LEFT
3	2T	Hunter	PROS-06-CV-MPRCS515	40	0.22	0.45	RIGHT
14	2U	Hunter	PROS-06-CV-MPSS530	40	0.44	0.45	SIDE
38	2W	Hunter	PCB-10	40	1.00	0.45	BUBBLER
INST 12" POP-UP SPRINKLER							
11	3A	Hunter	INST-12-CV-MP1000-90	40	0.19	0.45	ADJUSTABLE
8	3B	Hunter	INST-12-CV-MP1000-180	40	0.39	0.45	ADJUSTABLE
1	3D	Hunter	INST-06-CV-MP1000-270	40	0.57	0.45	ADJUSTABLE
2	3F	Hunter	INST-12-CV-MP2000-90	40	0.40	0.45	ADJUSTABLE
4	3G	Hunter	INST-12-CV-MP2000-180	40	0.74	0.45	ADJUSTABLE
2	3K	Hunter	INST-12-CV-MP3000-90	40	0.86	0.45	ADJUSTABLE
1	3L	Hunter	INST-12-CV-MP3000-180	40	1.82	0.45	ADJUSTABLE
3	3S	Hunter	INST-12-CV-MPLCS515	40	0.22	0.45	LEFT
2	3T	Hunter	INST-12-CV-MPRCS515	40	0.22	0.45	RIGHT
25	3U	Hunter	INST-12-CV-MPSS530	40	0.44	0.45	SIDE

CONTRACTOR TO VERIFY ALL QUANTITIES

NORTH

20' 0 20'

SCALE: 1"=20'

A & K LAND PLANNING & DESIGN Inc.
PHONE: (904) 476-9692
8787 SOUTHSIDE BLVD. #511, JACKSONVILLE, FLORIDA 32256
E-MAIL: AKLANDPLANNING@COMCAST.NET
Kristoffer Reed RLA
#LA6667112

REVISIONS	DATE

BB&T – COCONUT CREEK BRANCH
5700 COCONUT CREEK PARKWAY
MARGATE, FLORIDA 33063

BB&T

IRRIGATION PLAN

H & T CONSULTANTS, INC.
PLANNING – ENGINEERING
9310 OLD KINGS ROAD SOUTH, SUITE 1001
JACKSONVILLE , FLORIDA 32257
PHONE: 904-419-1001 FAX: 904-419-1004

H&T

JOB NO: 2014.34

DRAWN: K.S.R.

CHECK: LT

DATE: 10/29/14

PLATE

L-4

SHEET OF

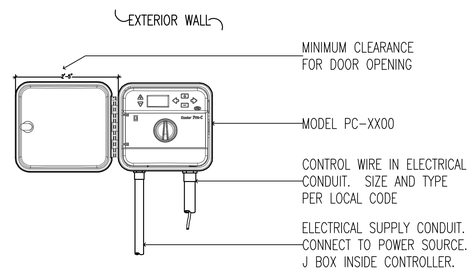

NOTE
SPECIFY 3, 6, 9, 12, 15 STATION MODEL CONTROLLER.
MOUNT CONTROLLER WITH LCD SCREEN AT EYE LEVEL.
CONTROLLER SHALL BE HARD-WIRED TO GROUNDED 110 VAC SOURCE.

PRO-C CONTROLLER

NO SCALE — Hunter® IRRIGATION DETAIL

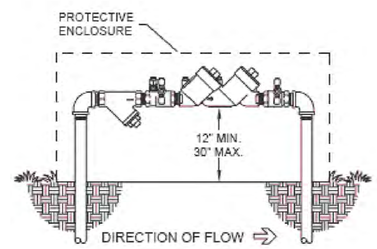

OUTDOOR INSTALLATION

WILKINS 950 XLT INSTALLATION DETAIL

NO SCALE

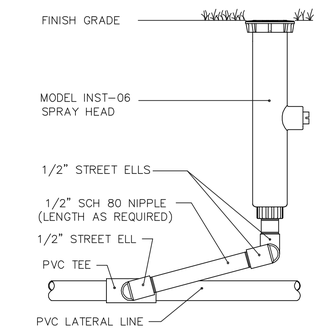

Hunter® INST-06 SPRAY HEAD

NO SCALE — INSTALLATION DETAIL

SWING

NOTES

Irrigation Contractor shall be responsible for all applicable fees and permits.

All Pipe and Wire under paving shall be placed in Schedule 40 P.V.C. Sleeves for the full pavement coverage length and shall be at least 24" below grade.

Mainlines shall be buried to provide a minimum cover of 18", while all Lateral lines shall have a minimum of 12".

The Contractor should take care to reroute piping as necessary to avoid plant or tree roots.

All Sprinklers shall be site adjusted to prevent water overthrow onto building surfaces and walkways.

All Control Wiring to be 14/1 U.F. direct burial.

Install a "MiniClik" rain sensor device. Verify location with Owners Representative.

Install Backflow Preventer in an inconspicuous location such as shrubbery. Location shown for graphic clarity purposes only.

Contractor responsible for 100% irrigation coverage

All irrigation risers to be painted black

Mainline location shown for graphic clarity purposes only.

Valve box location shown for graphic clarity purposes only.

Irrigation system designed to not exceed 5 feet per second flow through any piping. Any deviation from design upon installation shall be done so as to not exceed 5' per second through any piping as well.

LEGEND

I.D.	DESCRIPTION	SPECIFICATION
M	WATER SOURCE	1" Irrigation Only Water Meter
	BACKFLOW DEVICE	Wilkins 950XLT- 1" or equal LOCATIONS SHOWN FOR CLARITY ONLY
(2")	SLEEVING	Schedule 40 PVC, 2" Minimum
C	CONTROLLER	Hunter series PC- 600 series. 6 Zone Install with Mini-Clik rain sensor.
1	SOLENOID VALVE	Hunter series ICV-151G-B (1 1/2" valve) All valves to have reclaimed water ID handle (#561205) Location shown for graphic clarity
3I	IRRIGATION HEAD	Hunter series Pro - MPR Series
1/2	PIPE AND PIPE SIZE	SDR 13.5 1/2" and 3/4" lines SDR 26 for all 1" and larger lateral lines
	MAINLINE	Irrigation mainline, Schedule 40 PVC pipe 1 1/2" size.
	DRIP LINE	PLD ESD - 1.0 - 18 - 250 install with air relief valve and flush valve

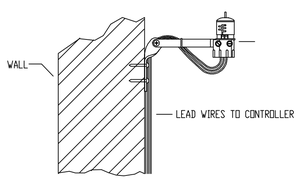

NOTE:
MOUNT MINI-CLIK ON ANY SURFACE WHERE IT WILL BE EXPOSED TO UNOBSTRUCTED RAINFALL, BUT NOT IN THE PATH OF SPRINKLER SPRAY.

Hunter® MINI-CLIK

NO SCALE — INSTALLATION DETAIL

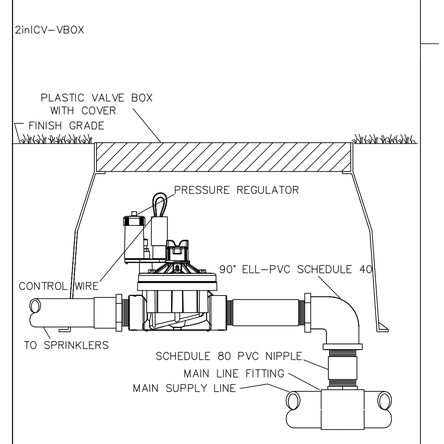

Hunter® 1.5" ICV W/ PRESSURE REGULATOR

NO SCALE — INSTALLATION DETAIL

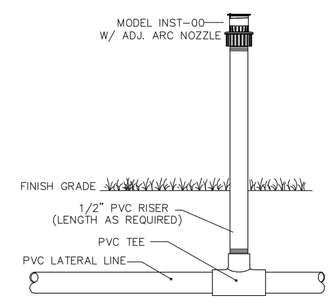

Hunter® INST-00

NO SCALE — INSTALLATION DETAIL

RIGID

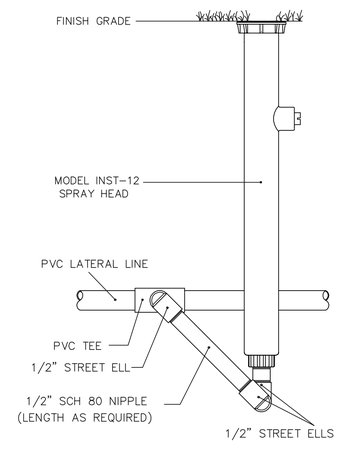

Hunter® INST-12 SPRAY HEAD

NO SCALE — INSTALLATION DETAIL

SWING

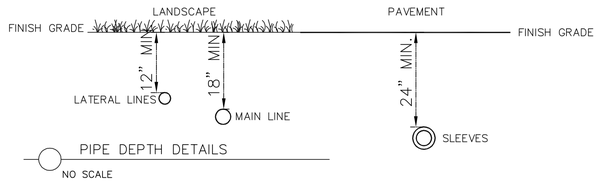

PIPE DEPTH DETAILS

NO SCALE

A & K LAND PLANNING & DESIGN Inc.
PHONE: (904) 476-9692
8787 SOUTHSIDE BLVD. #511, JACKSONVILLE, FLORIDA 32256
E-MAIL: AKLANDPLANNING@COMCAST.NET
Kristoffer Reed RLA
#LA6667112

REVISIONS	DATE

BB&T - COCONUT CREEK BRANCH
5700 COCONUT CREEK PARKWAY
MARGATE, FLORIDA 33063

BB&T

IRRIGATION DETAILS

H & T CONSULTANTS, INC.
PLANNING - ENGINEERING
9310 OLD KINGS ROAD SOUTH, SUITE 1001
JACKSONVILLE , FLORIDA 32257
PHONE: 904-419-1001 FAX: 904-419-1004

H&T

JOB NO: 2014.34
DRAWN: K.S.R.
CHECK: LT
DATE: 10/29/14
PLATE
L-5
SHEET OF

LITTLE
DIVERSIFIED ARCHITECTURAL CONSULTING

5815 Westpark Drive Charlotte, NC 28217
T: 704.525.6350 F: 704.561.8700

www.littleonline.com

This drawing and the design shown are the property of Little Diversified Architectural Consulting. The reproduction, copying or other use of this drawing without their written consent is prohibited and any infringement will be subject to legal action.

© Little 2014

BB&T

11.2.14

ISSUE FOR

FOR CONSTRUCTIO0N

ISSUE DATE

11.10.2014

REVISIONS

NO.	REASON	DATE

PROJECT TEAM

PRINCIPAL IN CHARGE

Nancy Everhart, AIA, LEED AP

PROJECT MANAGER

Richard B. Salmon, LEED AP

DESIGN TEAM

PROJECT NAME

BB&T BRANCH BANK - COCONUT CREEK

5700 COCONUT CREEK PARKWAY
MARGATE, FL 33063

PROJECT NO.

123.9419.00

SHEET TITLE

ELEVATIONS

SHEET NUMBER

A5.1

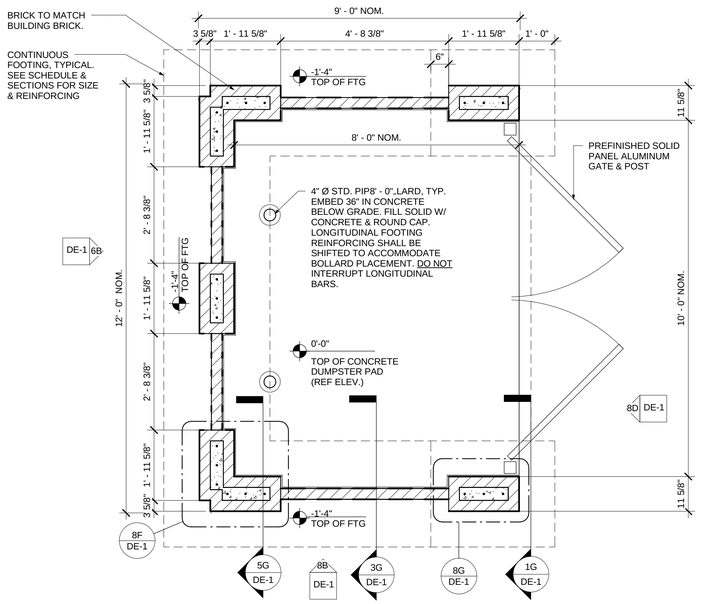

1C / DE-1 DUMPSTER SCREEN WALL PLAN
1/2" = 1'-0"

DUMPSTER SCREEN WALL PLAN NOTES

1. ELEVATIONS ARE INDICATED THUS ON PLAN:

TOP OF DUMPSTER PAD REFERENCE WORK POINT ELEVATION

2. THE DUMPSTER PAD SHALL BE A 6-INCH THICK CONCRETE SLAB, REINFORCED WITH 6X6-W2.9XW2.9 WELDED WIRE FABRIC, PLACED 2" CLEAR FROM TOP OF SLAB. PLACE SLAB OVER A 4" MINIMUM OF COMPACTED SUB-BASE MATERIAL. COORDINATE SUBGRADE PREPARATION REQUIREMENTS WITH SOILS REPORT.

3. ALL FOOTINGS ARE TO BE FOUNDED ON RESIDUAL SOIL OR STRUCTURAL FILL HAVING A MINIMUM BEARING CAPACITY OF 2000 PSF. ACCEPTABLE SOIL BEARING PRESSURE IS TO BE VERIFIED BY AN INDEPENDENT TESTING LABORATORY AT THE TIME FOOTING EXCAVATIONS ARE MADE.

4. GC SHALL COORDINATE THE TOP OF FOOTING ELEVATION WITH PLAN, SECTIONS, ELEVATIONS AND SITE GRADING PLAN PRIOR TO FABRICATION OF REINFORCING STEEL.

5. EXCAVATIONS FOR FOOTINGS SHALL BE MAINTAINED IN A DRY CONDITION UNTIL CONCRETE IS PLACED. WHENEVER POSSIBLE, THE EXCAVATION SHALL BE MADE, THE BEARING SURFACE INSPECTED, AND THE CONCRETE PLACED IN THE SAME DAY.

6. ALL CAST-IN-PLACE CONCRETE SHALL BE AIR-ENTRAINED HAVING A 28-DAY COMPRESSIVE STRENGTH OF 3000 PSI AND A WATER-CEMENT RATIO NOT EXCEEDING 0.45. FOR CONCRETE MATERIALS, MIX ADMIXTURES, SLUMP, TESTS, FORMWORK AND WORKMANSHIP, REMOVAL OF FORMS, RE-SHORING, CURING, HARDENING AND PROTECTING, FINISHING, CLEANING AND PATCHING, SEE THE REQUIREMENTS OF THE PROJECT SPECIFICATIONS.

7. ALL REINFORCING STEEL SHALL CONFORM TO ASTM A615, GRADE 60. UNLESS OTHERWISE NOTED, LAP REINFORCING STEEL 30XBAR DIAMETERS. WELDED WIRE FABRIC SHALL CONFORM TO ASTM A185. LAP ONE HALF MESH DIMENSION, PLUS END EXTENSIONS OF WIRES NOT LESS THAN 6". ALL REINFORCING STEEL (INCLUDING WELDED WIRE FABRIC) SHALL BE SECURELY TIED AND ANCHORED IN PALCE TO PREVENT DISLOCATION DURING THE PLACING OPERATION.

8. BRICK TO MATCH THAT USED AT BUILDING. NET AREA COMPRESSIVE STRENGTH OF CLAY MASONRY (f'm) FOR BRICK USED AT DUMPSTER SCREEN WALLS SHALL BE 2000 PSI.

9. REFER TO STRUCTURAL DRAWINGS FOR DESIGN LOADS.

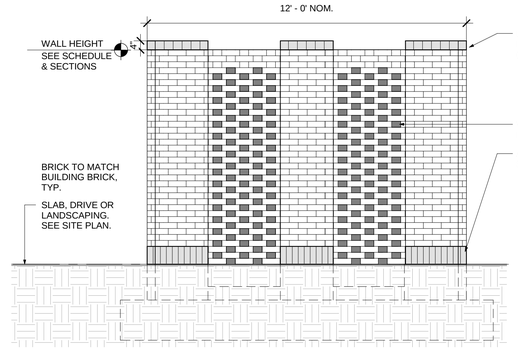

6B / DE-1 ELEVATION A
3/8" = 1'-0"

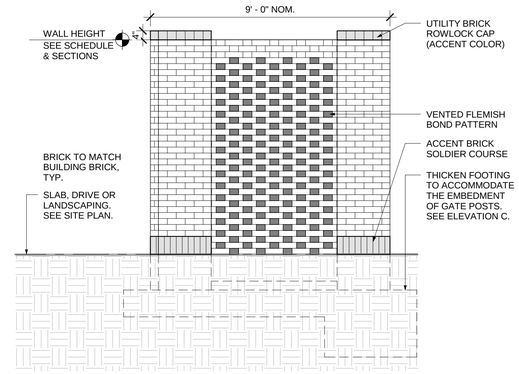

8B / DE-1 ELEVATION B
3/8" = 1'-0"

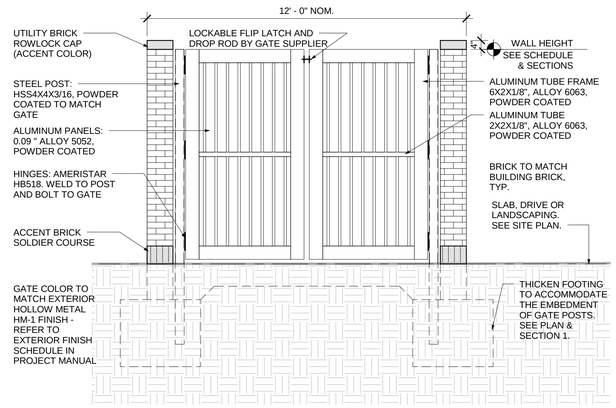

8D / DE-1 ELEVATION C
3/8" = 1'-0"

WALL DESIGN SCHEDULE								
A	B	C	D	E	F	G	H	J
3'-0"	1'-4"	8'-0"	(8)#5	#5 @ 10" O.C.	#5 @ 6" O.C.	36"	#5 @ 6" O.C.	8"

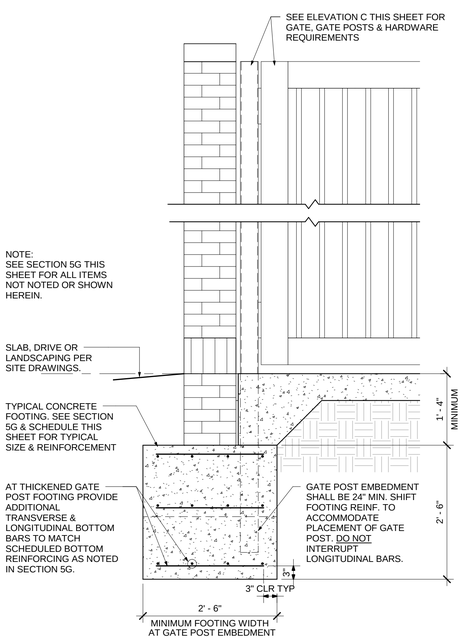

1G / DE-1 SECTION 1
3/4" = 1'-0"

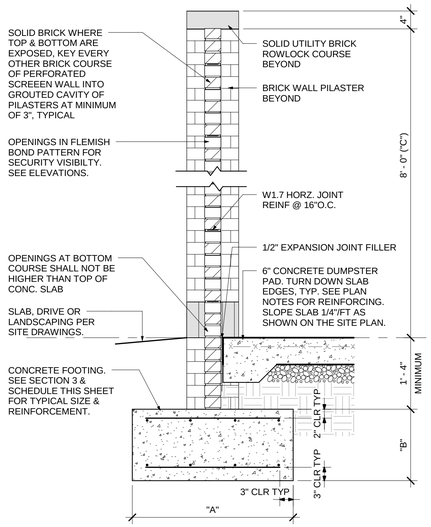

3G / DE-1 SECTION 2
3/4" = 1'-0"

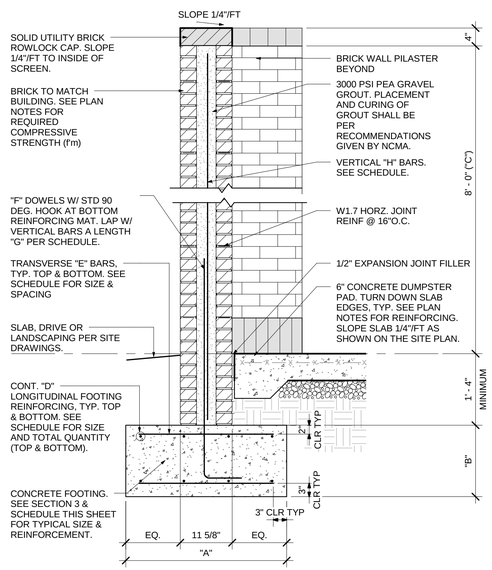

5G / DE-1 SECTION 3
3/4" = 1'-0"

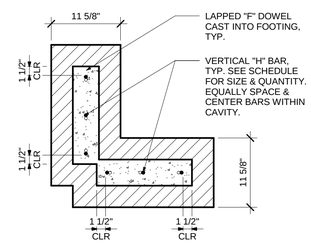

8F / DE-1 PLAN DETAIL 1 - PD1
1" = 1'-0"

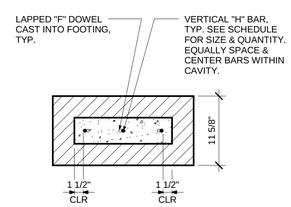

8G / DE-1 PLAN DETAIL 2 - PD2
1" = 1'-0"

LITTLE
DIVERSIFIED ARCHITECTURAL CONSULTING
5815 Westpark Drive Charlotte, NC 28217
T: 704.525.6350 F: 704.561.8700
www.littleonline.com

This drawing and the design shown are the property of Little Diversified Architectural Consulting. The reproduction, copying or other use of this drawing without their written consent is prohibited and any infringement will be subject to legal action.

© Little 2014

BB&T

11.2.14

ISSUE FOR
FOR CONSTRUCTIO0N

ISSUE DATE
11.10.2014

REVISIONS

NO.	REASON	DATE

PROJECT TEAM
PRINCIPAL IN CHARGE
Nancy Everhart, AIA, LEED AP
PROJECT MANAGER
Richard B. Salmon, LEED AP
DESIGN TEAM

PROJECT NAME
BB&T BRANCH BANK - COCONUT CREEK

5700 COCONUT CREEK PARKWAY
MARGATE, FL 33063

PROJECT NO.
123.9419.00

SHEET TITLE
DUMPSTER SCREEN DETAILS

SHEET NUMBER
DE-1

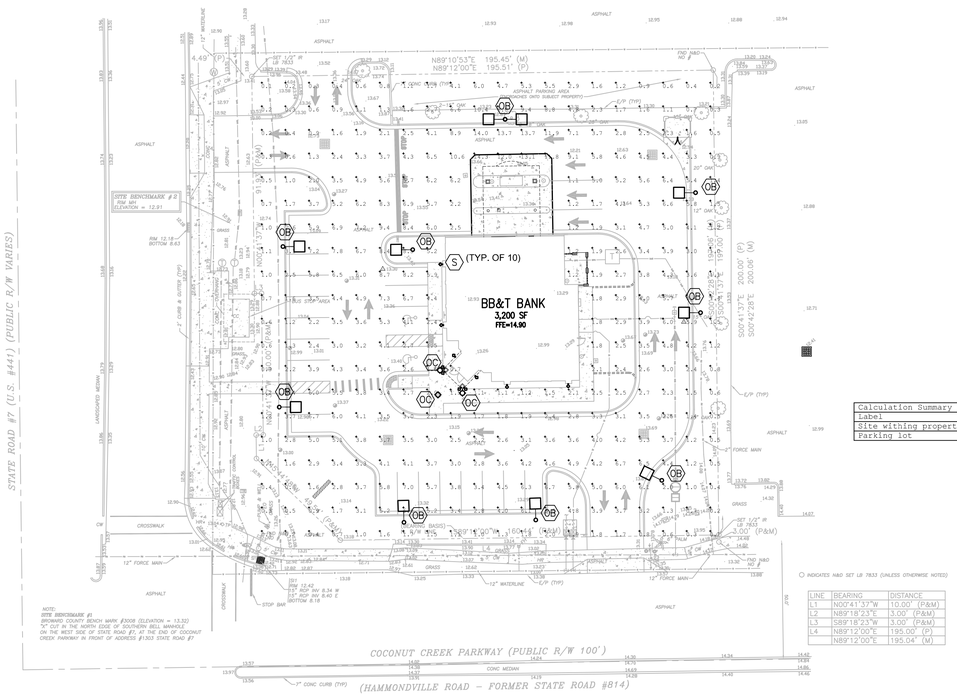

INDICATES N&D SET LB 7833 (UNLESS OTHERWISE NOTED)

LINE	BEARING	DISTANCE
L1	N00°41'37"W	10.00' (P&M)
L2	N89°18'23"E	3.00' (P&M)
L3	S89°18'23"W	3.00' (P&M)
L4	N89°12'00"E	195.00' (P)
	N89°12'00"E	195.04' (M)

1 PHOTOMETRIC PLAN
E1.1 SCALE: 1" = 30'

NOTE:

ALL LIGHTING WILL BE POSITIONED SO THAT IT DOES NOT ADVERSELY AFFECT ADJACENT PROPERTIES OR ROADWAY TRAFFIC.

ALL POLES TO BE SET BACK 2' FROM BACK OF CURB.

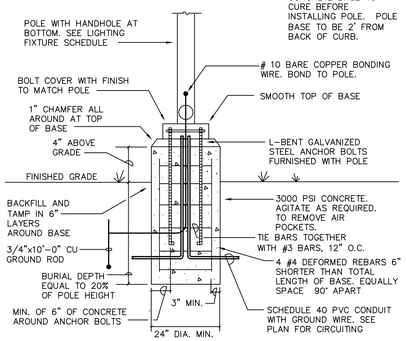

NOTE:

ALLOW 30 DAYS FOR CONCRETE BASE TO CURE BEFORE INSTALLING POLE. POLE BASE TO BE 2' FROM BACK OF CURB.

2 POLE BASE DETAIL
E1.1 SCALE: NONE

Calculation Summary							
Label	CalcType	Units	Avg	Max	Min	Avg/Min	Max/Min
Site withing property line	Illuminance	Fc	3.46	14.3	0.1	34.60	143.00
Parking lot	Illuminance	Fc	4.49	14.3	0.7	6.41	20.43

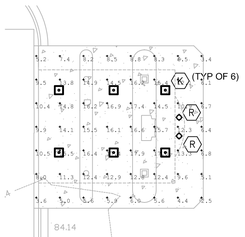

2 CANOPY PHOTOMETRIC PLAN
E1.1 SCALE: 1" = 60'

LITTLE
DIVERSIFIED ARCHITECTURAL CONSULTING

5815 Westpark Drive Charlotte, NC 28217
T: 704.525.6350 F: 704.561.8700

www.littleonline.com

This drawing and the design shown are the property of Little Diversified Architectural Consulting. The reproduction, copying or other use of this drawing without their written consent is prohibited and any infringement will be subject to legal action.

© Little 2014

BB&T

ELECTRICAL ENGINEER
MARTIN O. MOBLEY, PE
LITTLE DIVERSIFIED ARCHITECTURAL CONSULTING, INC.
5815 WESTPARK DRIVE
CHARLOTTE, NC 28217
FLORIDA LICENSE No. 57848
FLORIDA COA No. 00008157
PHONE NUMBER 704-561-4603

MARTIN O. MOBLEY
LICENSED
No E7549
STATE OF FLORIDA
PROFESSIONAL ENGINEER
11-3-2014

ISSUE FOR
FOR CONSTRUCTION

ISSUE DATE
11/3/2014

REVISIONS

NO.	REASON	DATE

PROJECT TEAM
PRINCIPAL-IN-CHARGE
Martin Mobley, PE
PROJECT MANAGER
Richard Salmon,LEED AP BD+C
DESIGN TEAM
Lee Brooks, LC

PROJECT NAME
BB&T BRANCH BANK
Coconut Creek
5700 Coconut Creek
Margate, FL 33063

PROJECT NUMBER
123.9419.00

SHEET TITLE
PHOTOMETRIC PLAN

SHEET NUMBER
E1.1

\\Clt-fsb\data\2 Retail\123_Service Retail\BB&T\123 9419 00 Coconut Creek FL\Engineer\Electrical\E1-1.dwg Nov 4, 2014-10:09am

TYPE 'K'

Columbia LIGHTING

HH22 LENSED

2' × 2' Recessed HID Lensed Troffer / Horizontal Lamp

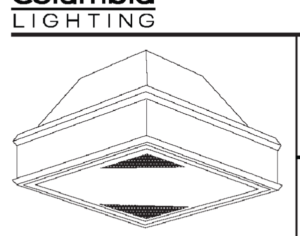

PROJECT INFORMATION

Project Name | Type

Catalog No. | Date

FEATURES

- Ideal for manufacturing areas, retail stores, and gymnasiums
- Horizontal or vertical lamp position
- Choice of tempered glass or acrylic lens with tempered glass overlay
- Ballast accessible from below
- Ballast housing is made of aluminum for maximum heat dissipation
- White powder coat finish, painted after fabrication
- Uses EISA compliant pulse start metal halide technology
- Louvered version also available, see HH22 Parabolic

CONSTRUCTION
Housing constructed of code gauge steel. Power door is constructed of 18 gauge steel and is secured with (2) ¼ turn fasteners. The power door contains all of the electrical components and can easily be removed from the fixture for maintenance. The ballast housing is constructed of aluminum for maximum heat dissipation. The housing is riveted together for maximum rigidity. Standard door frame is constructed of cold rolled steel and is retained in fixture with two sturdy cam latches and T-hinges. The door can be installed from either side. Consult your Columbia representative for availability of aluminum doors.

FINISH
Housing and all other parts are painted after fabrication with a white polyester finish for maximum reflectance longevity.

AIR HANDLING
All units are static and cannot be used for supply or air return.

INSTALLATION
A ⅞" knockout is provided in the capacitor housing. All leads are pulled through the knockout for installation.

ELECTRICAL
Wired with core and coil ballasts and are SCWA.

CEILING COMPATIBILITY
Luminaire is available to fit most standard ceiling types as shown at left. For information on compatibility with specific ceilings, contact your Columbia representative. All luminaires are provided as standard with integral T-Bar clips.

CERTIFICATION
All luminaires are built to UL 1598 standards and bear appropriate UL and cUL or CSA labels. Damp location labeling is standard.

ORDERING INFORMATION

EXAMPLE HH22-P400G-FSTG73-S-QT277

HH 22 - P - - S - -

- MODEL: HH Horizontal Lamp Orientation
- SIZE: 22 2' × 2'
- LAMP TYPE: P Pulse Start Metal Halide
- LAMP WATTS: 175 175 Watt; 200 200 Watt; 250 250 Watt; 320 320 Watt; 350 350 Watt; 400 400 Watt[1]
- CEILING TYPE: G Grid; F Flange
- DOOR: FS Flush Steel; FA Flush Aluminum; RA Regressed Aluminum
- SHIELDING: TG73 Tempered Glass Pattern 73; CTGY12 Clear Tempered Glass with A12 Underlay; DP Drop Polycarbonate Lens[2,3]
- AIR HANDLING FUNCTION: S Static
- VOLTAGE: QT Quad-Tap, 120V, 208V, 240V, 277V; 480 480V; 347 347V
- QT WIRED TO: 120 120V; 208 208V; 240 240V; 277 277V (Std.)
- OPTIONS: QR Quartz Restrike; GLR Fast Slow Fuse; NYC NYC Compliant; NYCU NYC Compliant, Union Label

[1] 400W horizontal positioned lamp listed for Marked Spacing only. See specification sheet for details.
[2] Available with FS door only.
[3] DP drop lens projects 2.25" below ceiling.

Page 1/2 Rev. 03/05/12 LENSED TROFFERS / HH22 LENSED

© 2012 Columbia Lighting, a division of Hubbell Lighting, Inc. Because of continuing product improvement programs, Columbia Lighting reserves the right to change specifications without notice. 701 Millennium Blvd. Greenville, SC 29607 / Tel 864.678.1000 / Tech Support 864.678.1668 / Website www.columbialighting.com

TYPE 'R'

10" Lensed Ellipsoidal One Lamp MH Downlights

1061M

One 175W
ED28 or BT28 MH Lamp
120V or 277V

DATE: TYPE:
FIRM NAME:
PROJECT:

Architektür

Ceiling Cutout: 9 15/16"
Maximum Ceiling Thickness: 1 1/4"
For conversion to millimeters, multiply inches by 25.4
Not to Scale

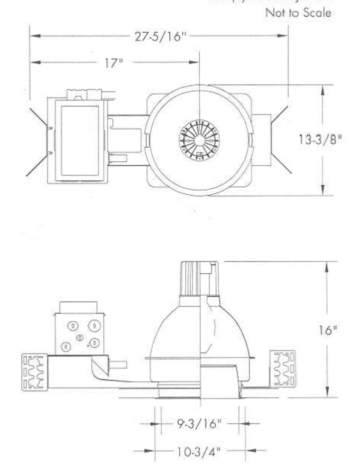

APPLICATIONS: The Architektür 1061M Series offers a lensed high wattage ellipsoidal metal halide downlight that provides superior brightness and glare control. This luminaire is ideal for a wide variety of high ceiling applications including commercial, retail, and hospitality areas.

HOUSING: Diecast aluminum plaster flange and heat sink. .050" spun aluminum diffuse Alzak upper reflector. Prewired J-box. Thermal protector.

REFLECTOR: High purity aluminum Alzak reflector. Self-trim standard. Painted white self-trim available. Removable one-piece baffle or cone with white polypropylene trim ring. Protective glass lens.

BALLAST: Thermally protected electronic ballast included with housing. Accessible from below ceiling. See reverse side for ballast data.

LAMP: One (1) 175W ED28 or BT28 coated pulse start metal halide lamp. Enclosed rated. Lamp furnished by others.

SOCKET: Mogul base porcelain socket with nickel plated screw shell.

INSTALLATION: Universal adjustable mounting brackets accommodate 1 1/2" or 3/4" lathing channel or 1/2" EMT (by others), or Prescolite 24" bar hangers (B24 or B6).

LABELS: CSA US listed for damp locations. Approved for through wiring. Thermally protected. Non-IC rated. EISA complaint.

Requires field adjustment for 2 x 2 installation.

CATALOG NUMBER: EXAMPLE: 1061M175EB 836LBC B6

- HOUSINGS: Ⓔ 1061M175EB 10", (1) 175W ED28 or BT28 MH enclosed fixture
- VOLTAGE: 120V; 277V (*347V magnetic ballast only (consult technical support))
- HOUSING OPTIONS: DCB Auxiliary socket (see note on back page); FSDFA Fuse kit installed at factory; QR Quartz restrike (see note on back page)
- REFLECTORS: 836L Specular clear Alzak reflector with lens
- REFLECTOR COLOR: Blank Clear Alzak; CG Champagne Gold Alzak; BL Black Alzak; WE Wheat Alzak; LW Light Wheat Alzak; PW Pewter Alzak
- REFLECTOR OPTIONS: Blank Specular; SS Semi-Specular; MFC American Matte™
- REFLECTOR OPTIONS: BC Painted black cone; WC Painted white cone; BB Painted black baffle; WB Painted white baffle; TRG Trim Ring Gasket (factory installed)
- ACCESSORIES: B24 Set of two (2) 24"-bar hangers for T-bar ceilings; B6 Set of two (2) bar hangers for ceiling joists up to 24" centers; FSDFI Fuse kit for field installation; SCA10D_ Sloped ceiling adapter (see note on back page)

Ⓔ EISA Compliant

prescolite
A Division of Hubbell Lighting, Inc.

In a continuing effort to offer the best product possible we reserve the right to change, without notice, specifications or materials that in our opinion will not alter the function of the product.
Web: www.prescolite.com • Tech Support: (888) 777-4832

ARCH-HID-015

TYPE 'OA & OB'

LITHONIA LIGHTING®

FEATURES & SPECIFICATIONS

Catalog Number
Notes | Type

CONTOUR SERIES

Soft Square Lighting

KAD

MH: 70W-400W
HPS: 70W-400W
20' to 35' Mounting

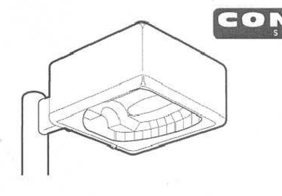

INTENDED USE — Ideal for parking areas, street lighting, walkways and car lots.

CONSTRUCTION — Rugged, die-cast, soft corner aluminum housing with 0.12" nominal wall thickness. Die-cast door frame has impact-resistant, tempered, glass lens that is fully gasketed with one-piece tubular silicone.

FINISH — Standard finish is dark bronze (DDB) polyester powder finish, with other architectural colors available.

OPTICAL SYSTEM — Anodized, aluminum hydroformed reflectors: IES full cutoff distributions R2 (asymmetric), R3 (asymmetric), R4 (forward throw) and R5S (square) are interchangeable. High-performance anodized, segmentec aluminum reflectors IES full cutoff distributions SR2 (asymmetric), SR3 (asymmetric) and SR4SC (forward throw, sharp cutoff). Segmented reflectors attach with tool-less fasteners and are rotatable and interchangeable.

ELECTRICAL SYSTEM — Ballast: High pressure sodium: 70-150W is high reactance, high power factor. Constant wattage autotransformer for 200-400W. Metal halide: 70-150W is high reactance, high power factor and is standard with pulse-start ignitor technology. "SCWA" not required. Constant wattage autotransformer for 175-400W. Super CWA (pulse start ballast), 88% efficient and EISA legislation compliant, is required for metal halide 151-400W (SCWA option) for US shipments only. CSA, NOM or INTL required for probe start shipments outside of the US. Pulse-start ballast (SCWA) required for 200W, 320W, or 350W. Ballast is 100% factory-tested.

Socket: Porcelain, horizontally oriented medium base socket for 70-150M. Mogul base socket for 175M and above, and 70-400S, with copper alloy, nickel-plated screw shell and center contact. UL listed 1500W, 600V.

LISTING — UL Listed (standard). CSA Certified (see Options). UL listed for 25°C ambient and wet locations. IP65 rated in accordance with standard IEC 529.

Specifications subject to change without notice.

Specifications
EPA: 1.2 ft.[2]
*Weight: 35.9 lbs (16.28 kg)
Length: 17-1/2" (44.5 cm)
Width: 17-1/2" (44.5 cm)
Depth: 7-1/8" (18.1 cm)
*Weight as configured in example below.

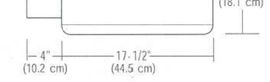

ORDERING INFORMATION

For shortest lead times, configure product using standard options (shown in bold).
Example: KAD 400M R3 TB SCWA SPD04 LPI

KAD

- Series: KAD
- Wattage: Metal halide 70M[1,2], 100M[1], 150M, 175M[20], 200M[3], 250M[20], 320M[3], 350M[3,20], 400M[4,20]; High pressure sodium[1] 70S, 100S, 150S, 250S, 400S; Ceramic metal halide 70MHC[1,2], 100MHC[1], 150MHC
- Distribution: Hydroformed reflectors R2 IES type II asymmetric[5]; R3 IES type III asymmetric[5]; R4 IES type IV forward throw[5]; R5S IES type V square; Segmented reflectors[6] SR2 IES type II asymmetric[5]; SR3 IES type III asymmetric[5]; SR4SC IES type IV forward throw
- Voltage: 120; 208[7]; 240[7]; 277; 347; 480[7]; TB[8]; 23050HZ[9]
- Mounting: Type / Length[10]: SPD__ Square pole; RPD__ Round pole; WBD__ Wall bracket; WWD__ Wood pole or wall; 04 4" arm; 06 6" arm; 09 9" arm; 12 12" arm; DAD12P Degree arm (pole)[11]; DAD12WB Degree arm (wall)[11]; WBA Decorative wall bracket[11,12]; KMA Mast arm external fitter; KTMB Twin mounting bar
- Ballast: (blank) Magnetic ballast; CWI Constant wattage isolated[9]; Pulse Start; SCWA Super CWA pulse start ballast; NOTE: For shipments to U.S. territories, SCWA must be specified to comply with EISA.
- Options: Shipped installed in fixture: SF Single fuse 120, 277, 347V[13]; DF Double fuse 208, 240, 480[13]; PD Power tray[14]; PER NEMA twist-lock receptacle only (no photocontrol); QRS Quartz restrike system[15]; QRSTD QRS time delay[15]; WTB Terminal wiring block[14]; HS House-side shield; CSA CSA Certified; INTL Available for MH probe start shipping outside the U.S. Shipped separately[16]: PE1 NEMA twist-lock PE (120, 208, 240V); PE3 NEMA twist-lock PE (347V); PE4 NEMA twist-lock PE (480V); PE7 NEMA twist-lock PE (277V); SC Shortening cap for PER option; VG Vandal guard; WG Wire guard
- Lamp[18]: LPI Lamp included; L/LP Less lamp
- Finish[17]: (blank) Dark bronze; DWH White; DBL Black; DMB Medium bronze; DNA Natural aluminum

NOTES:
1 Not available with SCWA.
2 Not available with 480V.
3 Must be ordered with SCWA.
4 Reduced jacket ED28 required for SR2, SR3 and SR4SC optics.
5 House-side shield available.
6 Segmented reflectors not available with QRSTD.
7 Must specify CWI for use in Canada.
8 Optional multi-tap ballast (120, 208, 240, 277V; in Canada: 120, 277, 347V).
9 Consult factory for available wattages.
10 9" arm is required when two or more luminaires are oriented on a 90° drilling pattern.
11 Ships separately.
12 Available with SPD04 and SPD09.
13 Must specify voltage. N/A with TB.
14 Only available with SR2, SR3, & SR4SC optics.
15 Max allowable wattage lamp included.
16 May be ordered as an accessory.
17 See www.lithonia.com/archolors for additional color options.
18 Must be specified.
19 Must use RPD09
20 These wattages do not comply with California Title 20 regulations.

Accessories
Order as separate catalog number.

Tenon Mounting Slipfitter — Number of fixtures

Tenon O.D.	One	Two@180°	Two@90°	Three@120°	Three@90°	Four@90°
2-3/8"	T20-190	T20-280	T20-290[19]	T20-320[19]	T20-390[19]	T20-490[19]
2-7/8"	T25-190	T25-280	T25-290[19]	T25-320	T25-390[19]	T25-490[19]
4"	T35-190	T35-280	T35-290[19]	T35-320	T35-390[19]	T35-490[19]

KADVG Vandal guard
KADWG Wire guard

NIGHTTIME FRIENDLY — Consistent with LEED® goals & Green Globes™ criteria for light pollution reduction

Outdoor Sheet #: KAD-M-S AL-370

TYPE 'OC'

FIXTURE TYPE:____________
PROJECT NAME:____________

BRONZELITE RF6 BOLLARD AREA/WALKWAY SPECIFICATION SHEET

Stylish and slim, the Bronzelite R6 bollards provide powerful yet cost effective solutions to driveway and walkway lighting needs. The glass refractor optics - Type 5 with or without house side shield - direct light outward for maximum spacing. The cone optics provide an efficient, even illumination.

All optical systems are protected by a clear acrylic lens and will accommodate sources up to 100 watt incandescent and 100 watt HID. The glass refractors and louvers will also accommodate up to 42 watt PL-T compact fluorescent. Available in 24", 30" and 38" heights, the R6 Series includes the Dome (D) and Flat (F) style head assembly.

model RF6

SPECIFICATIONS

HEAD ASSEMBLY: Spun aluminum. Access for re-lamping is by one stainless steel fastener.

FIXTURE COLUMN: Extruded aluminum, 6" diameter with .125" wall thickness.

FIXTURE BASE: Heavy-duty cast aluminum with three hole bolt pattern using 3/8"-16 UNC x 8" galvanized steel anchor bolts and twist-lock feature for easy fixture mounting. Column is secured to base with stainless steel locking screw.

OPTIC ASSEMBLY: Borosilicate Type 5 glass refractor with or without house side shield or conical specular aluminum reflector.

LENS: Single-piece clear acrylic with high temperature silicone gaskets for positive sealing of optical chamber.

SOCKETS: Sockets for incandescent and HID are all 4KV pulse rated high temperature porcelain. Sockets for compact fluorescent are high temperature plastic: 26 watt is GX24Q-3, 28 watt is GX32D-3, 32 watt is GX24Q-3, 42 watt is GX24Q-4.

BALLAST: Ballasts for HID are high power factor core and coil, multi-tap. Ballast for 28W PL-C compact fluorescent are core and coil, 120 VAC. Ballasts for 26/32/42W PL-T compact fluorescent are electronic, universal voltage 120-277V, 50 or 60Hz.

FINISH: Black (BLK), White (WHT), Dark Bronze (DB) and Dark Green (DGRN) finishes are thermoset polyester powder-coat. Verde (VRD) finish hand-rubbed over a black thermoset polyester powdercoat. Also available in highly weather-resistant CraftStone™ finishes (Limestone or Sandstone) which are bonded to the aluminum substrate.

WARRANTY: Three year limited warranty.

CERTIFICATION: UL Listed to U.S. and Canadian safety standards for wet locations.

Bronzelite®

Note: Bronzelite reserves the right to modify the above details to reflect changes in the cost of materials &/or production &/or design without prior notice.
BRONZELITE - GENLYTE GROUP•100 Craftway•Littlestown, PA 17340•Ph. (800) 273-1569•Fax (717) 359-9545•www.bronzelite.com
ISO 9001:2000 Registered Copyright Genlyte Group, BRONZELITE Divison 2005 RF6-Rev4

FIXTURE TYPE:____________
PROJECT NAME:____________

DIMENSIONS

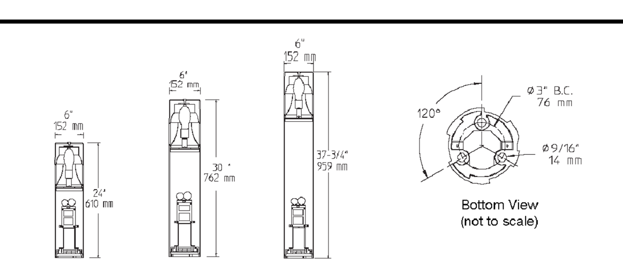

ORDERING LOGIC - RF6 BOLLARD

Finish: L=Limestone; S=Sandstone; BL=Black; WH=White; VR=Verde; DB=Dark Bronze; DG=Dark Green; SL=Silver
Optics: F=Cone*; 5=Type V Refractor; 5S=Type V Refractor with House Side Shield
Voltage: 120=120; 208=208; 240=240; 277=277
Height: 24=24"; 30=30"; 38=38" (standard)

Wattage	Model No.	Finish	Optics	Voltage	Height	Socket
50W Metal Halide E17	RF6050MH	( )	( )	(120,277)	( )	Medium
70W Metal Halide E17	RF6070MH	( )	( )	( )	( )	Medium
100W Metal Halide E17	RF6100MH	( )	( )	( )	( )	Medium
35W High Pressure Sodium E17	RF6035HPS	( )	( )	(120)	( )	Medium
50W High Pressure Sodium E17	RF6050HPS	( )	( )	( )	( )	Medium
70W High Pressure Sodium E17	RF6070HPS	( )	( )	( )	( )	Medium
100W High Pressure Sodium E17	RF6100HPS	( )	( )	( )	( )	Medium
100W Incandescent A21	RF6100I	( )	( )	(120)	( )	Medium
26W Fluorescent PLT GX24Q-3*	RF6026F	( )	(5,5S)	( )	( )	GX24Q-3
28W Fluorescent PLC28 GX32D-3*	RF6028F	( )	(5,5S)	(120)	( )	GX32D-3
32W Fluorescent PLT GX24Q-3*	RF6032F	( )	(5,5S)	( )	( )	GX24Q-3
42W Fluorescent PLT GX24Q-4*	RF6042F	( )	(5,5S)	( )	( )	GX24Q-4

NOTE: Lamp not included.
**Cone Optic not available with fluorescent lamps.*

Model No. — Finish — Optics — Voltage — Height

PROJECT NOTES

APPROVAL

Bronzelite®

Note: Bronzelite reserves the right to modify the above details to reflect changes in the cost of materials &/or production &/or design without prior notice.
BRONZELITE - GENLYTE GROUP•100 Craftway•Littlestown, PA 17340•Ph. (800) 273-1569•Fax (717) 359-9545•www.bronzelite.com
ISO 9001:2000 Registered Copyright Genlyte Group, BRONZELITE Division 2005 RF6-Rev4

TYPE 'S'

Wall luminaires for light in two directions

Housing: One piece die-cast aluminum for direct attachment to a BEGA 538 small opening wiring box.
Enclosure: Tempered clear glass, 3/16" thick, retained by one piece die-cast aluminum step baffle frame, 'slot' focusing prism, secured by stainless steel screws threaded into stainless steel inserts. Internal full, semi-specular reflector. Fully gasketed for weather tight operation using molded silicone rubber "U-channel" gaskets.
Electrical: Lampholders: Incandescent are double contact bayonet, stainless steel, rated 600V. Available in 120V only.
Finish: Available in five standard BEGA colors: Black (BLK); White (WHT); Bronze (BRZ); Silver (SLV); Eurocoat™ (URO). To specify, add appropriate suffix to catalog number. Custom colors supplied on special order.
U.L. listed, suitable for wet locations. Protection class: IP 65.

Type:
BEGA Product:
Project:
Voltage:
Color:
Options:
Modified:

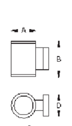

Dual light distribution

	Lamp	Lumen	A	B	C	D	Wiring box*
6610.538	1 100W T4 DCB	1900	4 3/16	6 5/16	6 1/2	3 1/2	538

* Small opening wiring box included

BEGA-US 1000 BEGA Way, Carpinteria, CA 93013 (805)684-0533 FAX (805)566-9474 www.bega-us.com
©copyright BEGA-US 2008 Updated 2/08

LIGHT FIXTURE SCHEDULE

MARK	DESCRIPTION	LAMPS	TOTAL FIXTURE WATTAGE	BALLASTS	VOLTAGE	MANUFACTURER (NO SUBSTITUTIONS)	DETAILS
K	2'X2' HID LAY-IN	1 M100/U	188W	HIGH POWER FACTOR	120V	COLUMBIA: SQHH-22-P100-G-FS-DP-QT-120-G2	PROVIDE OPTIONAL DROPPED PYRAMIDAL DIFFUSER LENS. INSTALL WITH 1 ADDITIONAL GASKET TO LIMIT INSECT INTRUSION.
R	RECESSED METAL HALIDE DOWNLIGHT	1 M175/U	210W	ELECTRONIC BALLAST	120V	PRESCOLITE: 1061M175EB 836L	10" APERTURE. VERTICALLY MOUNTED LAMP. CLEAR ALZAK REFLECTOR. DAMP LOCATION LABEL.
OA	TWO HEAD METAL HALIDE MOUNTED ATOP 25' ALUM. POLE. AT 90° OR 180°. ROTATE OPTICS AS SHOWN ON PLAN.	M400/U/BT-28	976W	HIGH POWER FACTOR	208V	LITHONIA: KAD 400M R3 208 SPD	TWO HEAD SHOEBOX WITH 25'-0" SQUARE STRAIGHT ALUMINUM POLE. POLE SHALL BE RATED FOR 100 MPH WIND. FINISH: DARK BRONZE
OB	ONE HEAD METAL HALIDE MOUNTED ATOP 25' ALUM. POLE. AT 90° OR 180°. ROTATE OPTICS AS SHOWN ON PLAN.	M400/U/BT-28	488W	HIGH POWER FACTOR	208V	LITHONIA: KAD 400M R4 208 SPD	ONE HEAD SHOEBOX WITH 25'-0" SQUARE STRAIGHT ALUMINUM POLE. POLE SHALL BE RATED FOR 100 MPH WIND. FINISH: DARK BRONZE
OC	6" ROUND BOLLARD	1 70W MH	88W	HIGH POWER FACTOR	120V	BRONZELITE: RF6070MH DB 5 120-38	ALLOY ALUMINUM HOUSING. CLEAR LENS. BRONZE FINISH. WET LOCATION LABEL.
S	EXTERIOR WALL SCONCE	1 100W T4 DCB	118W	ELECTRONIC BALLAST	120V	BEGA: 6610-538-BK	DIE-CAST ALUMINUM HOUSING. TEMPERED CLEAR GLASS LENS. SEMI-SPECULAR REFLECTOR. BLACK FINISH. WET LOCATION LABEL.

FIXTURE NOTES:

LITTLE
DIVERSIFIED ARCHITECTURAL CONSULTING

5815 Westpark Drive Charlotte, NC 28217
T: 704.525.6350 F: 704.561.8700
www.littleonline.com

This drawing and the design shown are the property of Little Diversified Architectural Consulting. The reproduction, copying or other use of this drawing without their written consent is prohibited and any infringement will be subject to legal action.

© Little 2014

BB&T

ELECTRICAL ENGINEER
MARTIN O. MOBLEY, PE
LITTLE DIVERSIFIED ARCHITECTURAL CONSULTING, INC.
5815 WESTPARK DRIVE
CHARLOTTE, NC 28217
FLORIDA LICENSE No. 57848
FLORIDA COA No. 00008157
PHONE NUMBER 704-561-4603

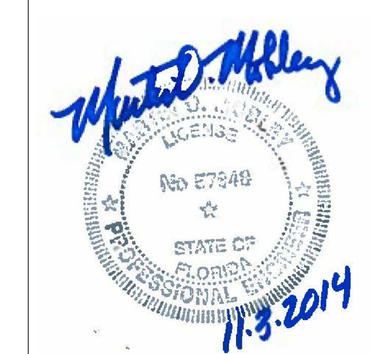

ISSUE FOR
FOR CONSTRUCTION

ISSUE DATE
11/3/2014

REVISIONS

NO.	REASON	DATE

PROJECT TEAM
PRINCIPAL IN CHARGE
Martin Mobley, PE
PROJECT MANAGER
Richard Salmon,LEED AP BD+C
DESIGN TEAM
Lee Brooks, LC

PROJECT NAME
BB&T BRANCH BANK
Coconut Creek
5700 Coconut Creek
Margate, FL 33063

PROJECT NUMBER
123.9419.00

SHEET TITLE
LIGHTING SCHEDULE

SHEET NUMBER
E1.2

\\Clt-fsb\data\2 Retail\123_Service Retail\BB&T\123 9419 00 Coconut Creek FL\Engineer\Electrical\E1-2.dwg Nov 4, 2014-10:08am

CFN # 108778257,
Page1 of 2
Recorded 08/06/2009 at 12:40 PM

DEDICATION

STATE OF FLORIDA
COUNTY OF BROWARD SS KNOW ALL MEN BY THESE PRESENTS: That JAMES G. FARRIS AND SHIRLEY J. FARRIS, owners of the lands described in and shown as included in this plat, have caused said lands to be subdivided and platted as shown hereon, said plat to be known as "FARRIS – MARGATE PLAT", being a replat of a portion of Tract 43, Block 93 and a portion of Tract 5, Block 94, THE PALM BEACH FARMS COMPANY PLAT NO. 3, recorded in Plat Book 2, Pages 45 – 54, Palm Beach County Records, being in Section 30, Township 48 South, Range 42 East, Broward County, Florida.

The additional thoroughfare dedication is hereby dedicated to the public for roads and road related purposes. Easements, as shown hereon, are hereby dedicated to the public for purposes as indicated.

IN WITNESS WHEREOF: We hereunto set our hands in the City of POMPANO BEACH, County of BROWARD, State of FLORIDA, this 15TH day of OCTOBER, 2008.

Witness (as to both): M. Alexander Name of witness printed M. ALEXANDER James G. Farris: James G. Farris
Witness (as to both): M. Alexander Name of witness printed M. ALEXANDER Shirley J. Farris: Shirley J. Farris

ACKNOWLEDGMENT

STATE OF FLORIDA
COUNTY OF BROWARD SS The foregoing instrument was acknowledged before me this 15 day of October, 2008, by James G. Farris and Shirley J. Farris.

They are:
[X] personally known to me or
[ ] have produced _____, as identification,
and
[X] did take and oath.
[ ] did not take an oath.

NOTARY PUBLIC Carolyn B. Applegate STATE OF FLORIDA
Name of Notary printed CAROLYN B. APPLEGATE

Carolyn B. Applegate
Commission # DD402626
Expires April 15, 2009
Bonded Troy Fain - Insurance, Inc. 800-385-7019

SEAL

CITY OF MARGATE PLANNING AND ZONING BOARD

THIS IS TO CERTIFY: That the City Planning and Zoning Board of Margate, Florida, has hereby approved and accepted this plat 2ND day of DECEMBER, 20 08. (City of Margate Planning # -P-08)
By: _____ Howard BROWN VICE ~~Morris Lichtenstein~~, Chairman, this 3rd day of Feb., 20 09.

CITY COMMISSION

STATE OF FLORIDA
COUNTY OF BROWARD SS THIS IS TO CERTIFY: That this plat has been accepted and approved for record by the CITY COMMISSION OF THE CITY OF MARGATE, FLORIDA, in and by RESOLUTION NO. 11-389, adopted by the said City Commission, this 21ST day of January, 2009.

No building permits shall be issued for the construction, expansion, and/or conversion of a building within this plat until such time as the developer provides this municipality with written confirmation from Broward County that all applicable impact fees have been paid or are not due.

By: _____ Pam Donovan ~~Devie McLean~~, Mayor, this 4th day of February, 20 09.

CITY ENGINEER'S SIGNATURE

This plat is approved and accepted for record this 28TH day of JULY, 20 09.
By: _____ RAVIKANTH R. CHITEPU, City Engineer, Florida P.E. Registration No. 53835

BROWARD COUNTY ENVIRONMENTAL PROTECTION AND GROWTH MANAGEMENT DEPARTMENT

This plat is approved and accepted for record this 29th day of JULY, 2009. By: _____ Director / Designee

BROWARD COUNTY HIGHWAY CONSTRUCTION AND ENGINEERING SERVICES DIVISION

This plat has been approved and accepted for record.

By: _____ 7/28/09 (date)
Robert P. Legg, Jr.
Professional Surveyor and Mapper
Florida Registration Number: LS 4030

By: _____ 7/29/09 (date)
Richard Tornese
Director
Professional Engineer
Florida Registration Number 40263

BROWARD COUNTY PLANNING COUNCIL

THIS IS TO CERTIFY: That the Broward County Planning Council approved this plat subject to its compliance with dedication of right-of-way for trafficways this 20TH day of NOVEMBER, 20 08.
By: _____ Chairperson This plat complies with the approval of the Broward County Planning Council of the above date and is approved and accepted for record this 4 day of August, 2009.
By: _____ Executive Director or Designee

BROWARD COUNTY FINANCE AND ADMINISTRATIVE SERVICES DEPARTMENT – COUNTY RECORDS DIVISION – MINUTES SECTION

THIS IS TO CERTIFY: That this plat complies with the provisions of Chapter 177, FLORIDA STATUTES, and was accepted for record by the Board of County Commissioners of Broward County, Florida, this 14 day of April, 2009 ATTEST: BERTHA HENRY – COUNTY ADMINISTRATOR
By: _____ Deputy By: _____ Mayor – Broward County, Florida.

BROWARD COUNTY FINANCE AND ADMINISTRATIVE SERVICES DEPARTMENT – COUNTY RECORDS DIVISION – RECORDING SECTION

This plat filed for record this 6th day of AUGUST, 2009, in BOOK 178 of PLATS, at Page 171, record verified.
ATTEST: BERTHA HENRY – COUNTY ADMINISTRATOR By: Mary C. Williams Deputy

SURVEYOR'S CERTIFICATE

STATE OF FLORIDA
COUNTY OF BROWARD SS I HEREBY CERTIFY: That the attached plat is a true and correct representation of the lands recently surveyed, subdivided and platted under my responsible direction and supervision, that the survey data shown complies with the applicable requirements of Chapter 177, Part 1, FLORIDA STATUTES, and further that the PERMANENT REFERENCE MONUMENTS (P.R.M.'S) were set in accordance with Section 177.091 of said Chapter 177, on this 30th day of July, 2009. The BENCH MARKS shown are referenced to NATIONAL GEODETIC VERTICAL DATUM OF 1929 and were established in conformity with the standards adopted by the National Ocean Survey for Third Order Vertical Control. This plat conforms to all applicable sections of Chapter 61G17-6, FLORIDA ADMINISTRATIVE CODE. This plat dated at Fort Lauderdale, Florida, this 7th day of October, 2008.

By: _____
Jerald A. McLaughlin
Registered Land Surveyor No. 5269
State of Florida.
for McLAUGHLIN ENGINEERING COMPANY
400 Northeast 3rd Avenue Fort Lauderdale, Florida 33301
Certificate of Authorization Number: LB 285

Jerald A. McLaughlin Surveyor No. 5269 STATE OF FLORIDA

City of Margate Corporate Seal

City Engineer's Seal

Robert P. Legg, Jr. County Surveyor & Professional Seal

Richard Tornese Acting Engineer's Seal

COUNTY COMMISSION CREATED OCT. 1ST 1915 BROWARD COUNTY, FLORIDA

"FARRIS - MARGATE CORNER PLAT"

A REPLAT OF A PORTION OF TRACT 43, BLOCK 93 AND A PORTION OF TRACT 5, BLOCK 94, TOGETER WITH ADJACENT ROAD RESERVATIONS "THE PALM BEACH FARMS COMPANY'S PLAT NO. 3" (PLAT BOOK 2, PAGES 45 - 54, PALM BEACH COUNTY RECORDS), SECTION 30, TOWNSHIP 48 SOUTH, RANGE 42 EAST, CITY OF MARGATE, BROWARD COUNTY, FLORIDA OCTOBER, 2008

OFFICIAL RECORD COPY

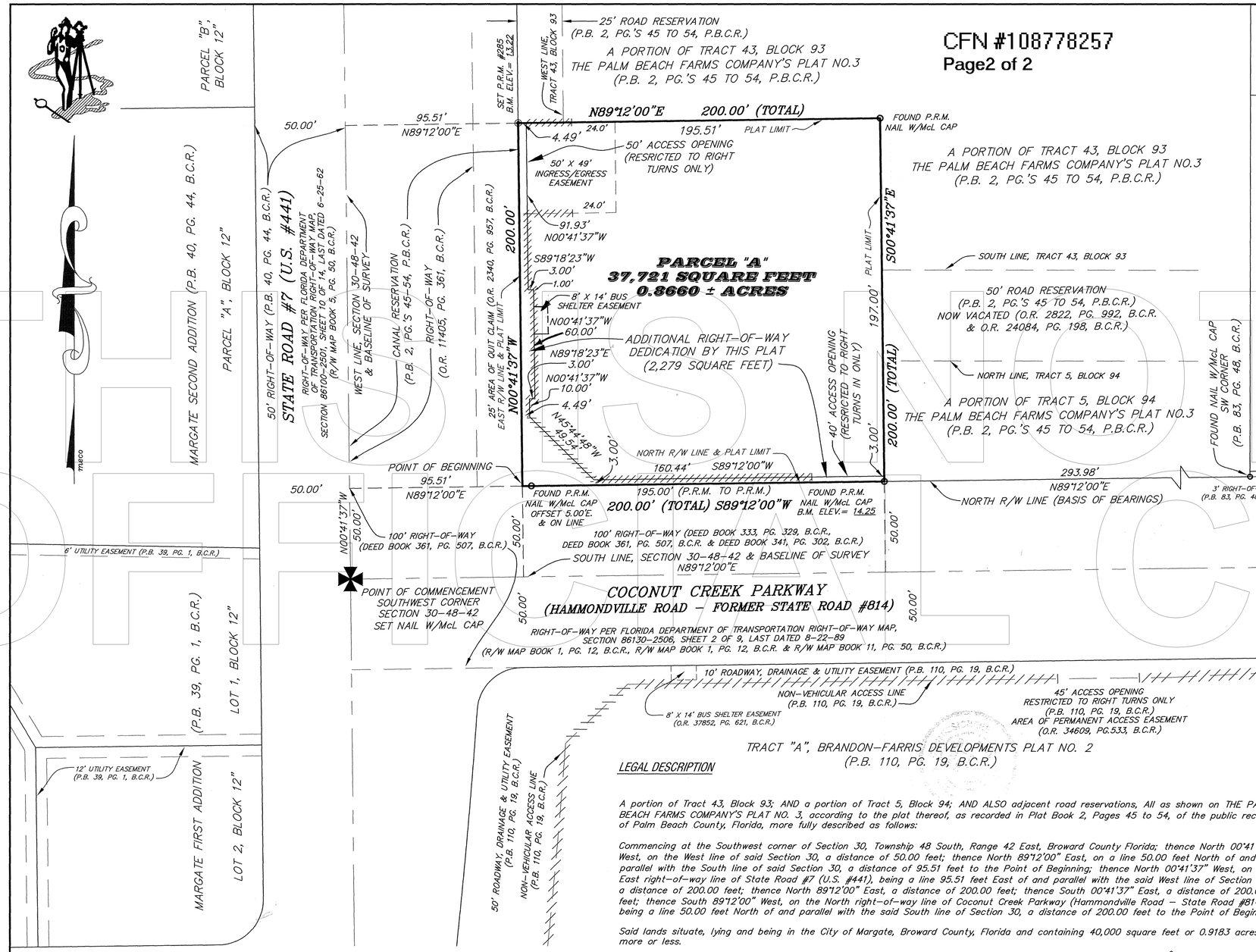

"FARRIS - MARGATE CORNER PLAT"

A REPLAT OF A PORTION OF TRACT 43, BLOCK 93 AND
A PORTION OF TRACT 5, BLOCK 94,
TOGETHER WITH ADJACENT ROAD RESERVATIONS
"THE PALM BEACH FARMS COMPANY'S PLAT NO. 3"
(PLAT BOOK 2, PAGES 45 - 54, PALM BEACH COUNTY RECORDS),
SECTION 30, TOWNSHIP 48 SOUTH, RANGE 42 EAST,
CITY OF MARGATE, BROWARD COUNTY, FLORIDA
OCTOBER, 2008

GRAPHIC SCALE

30 0 15 30 60 120

(IN FEET)
1 inch = 30 ft.

LEGAL DESCRIPTION

A portion of Tract 43, Block 93; AND a portion of Tract 5, Block 94; AND ALSO adjacent road reservations, All as shown on THE PALM BEACH FARMS COMPANY'S PLAT NO. 3, according to the plat thereof, as recorded in Plat Book 2, Pages 45 to 54, of the public records of Palm Beach County, Florida, more fully described as follows:

Commencing at the Southwest corner of Section 30, Township 48 South, Range 42 East, Broward County Florida; thence North 00°41'37" West, on the West line of said Section 30, a distance of 50.00 feet; thence North 89°12'00" East, on a line 50.00 feet North of and parallel with the South line of said Section 30, a distance of 95.51 feet to the Point of Beginning; thence North 00°41'37" West, on the East right-of-way line of State Road #7 (U.S. #441), being a line 95.51 feet East of and parallel with the said West line of Section 30, a distance of 200.00 feet; thence North 89°12'00" East, a distance of 200.00 feet; thence South 00°41'37" East, a distance of 200.00 feet; thence South 89°12'00" West, on the North right-of-way line of Coconut Creek Parkway (Hammondville Road - State Road #814), being a line 50.00 feet North of and parallel with the said South line of Section 30, a distance of 200.00 feet to the Point of Beginning.

Said lands situate, lying and being in the City of Margate, Broward County, Florida and containing 40,000 square feet or 0.9183 acres more or less.

RIGHT-OF-WAY NOTE:

1) Right-of-Way for State Road No. 7 not specifically delineated in R/W Map Book 4, Page 27, B.C.R.

1) Right-of-Way for State Road No. 814 not specifically delineated in R/W Map Book 7, Page 50, B.C.R.

1) Right-of-Way for State Road No. 7 not specifically delineated in O.R. 6082, Page 312, B.C.R.

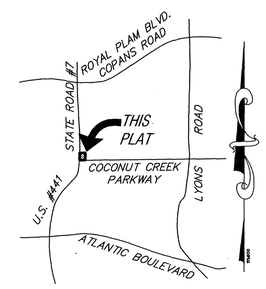

LOCATION MAP
NOT TO SCALE

THE FOLLOWING NOTE IS REQUIRED BY THE BROWARD COUNTY SURVEYOR PURSUANT TO CHAPTER 177.091, SUBSECTION(28), FLORIDA STATUTES:

Platted utility easements are also easements for the construction, installation, maintenance, and operation of cable television services; provided, however, no such construction, installation, maintenance, and operation of cable television services shall interfere with the facilities and services of an electric, telephone, gas, or other public utility. In the event a cable television company damages the facilities of a public utility, it shall be solely responsible for the damages. This note does not apply to private easements granted to or obtained by a particular electric, telephone, gas or other public utility. Such construction, installation, maintenance, and operation shall comply with the National Electric Safety Code as adopted by the Florida Public Service Commission.

PLAT RESTRICTION:

This plat is restricted to 8,500 square feet of Commercial use and 13,000 square feet of Office use. Banks and drive-thru facilities are not permitted and commercial/retail uses are not permitted in the office use without the approval of the Board of County Commissioners who shall review and address these uses for increased impacts.

Any structure within this plat must comply with Section IV D.1.f., Development Review Requirements, of the Broward County Land Use Plan, regarding hazards to air navigation.

This note is required by Chapter 5, Article IX, Broward County Code of Ordinances, and may be amended by approval of the Broward County Board of County Commissioners. The notation and any amendments thereto are solely indicating the approved development level for property located within the plat and do not operate as a restriction in favor of property owner including an owner or owners of property within this plat who took title to the property with reference to this plat.

SURVEYOR'S NOTES:

NOTICE: This plat, as recorded in its graphic form, is the official depiction of the subdivided lands described herein and will in no circumstances be supplanted in authority by any other graphic or digital form of the plat. There may be additional restrictions that are not recorded on this plat that may be found in the public records of Broward County, Florida.

Reference Bench Mark: Broward County Bench Mark #3008; "X" Cut in the North edge of Southern Bell Manhole on the West side of State Road #7, at the end of Coconut Creek Parkway in front of address #1303 State Road #7.

Bench Mark Elevation = 13.32 (Bench Mark Elevation is referenced to the National Geodetic Vertical Datum of 1929)

Bearings shown refer to an assumed meridian and assume the North right-of-way line of Coconut Creek Parkway (50 feet North of and parallel with the South line of Section 30-48-42) as South 89°12'00" West, by found monuments as shown hereon.

If a building permit for a principal building (excluding dry models, sales and construction offices) and first inspection approval are not issued by April 14, 2014, which date is five (5) years from the date of approval of this plat by Broward County, then the County's finding of adequacy shall expire and no additional building permits shall be issued until such time as Broward County makes a subsequent finding that the application satisfies the adequacy requirements set forth within the Broward County Land Development Code. The owner of the property shall be responsible for providing evidence to Broward County from the appropriate governmental entity, documenting compliance with this requirement within the above referenced time frame; and / or

If Project water lines, sewer lines, drainage and the rock base for internal roads are not installed by April 14, 2014, which date is five (5) years from the date of approval of this plat by Broward County, then the County's finding of adequacy shall expire and no additional building permits shall be issued until such time as Broward County makes a subsequent finding that the application satisfies the adequacy requirements set forth within the Broward County Land Development Code. This requirement may be satisfied for a phase of the project, provided a phasing plan has been approved by Broward County. The owner of the property shall be responsible for providing evidence to Broward County from the appropriate governmental entity, documenting compliance with this requirement within the above referenced time frame.

LEGEND

- ◉ P.R.M. - indicates Permanent Reference Monument (4"x4"x24" Concrete monument w/brass disk stamped "McLaughlin Eng. Co."-L.B. 285)
- NO. - indicates number
- SQ. FT. - indicates square feet
- B.M. ELEV. - indicates Bench Mark Elevation
- L.B. - indicates Licensed Business Number
- P.B. PG. - indicates Plat Book & Page
- B.C.R. - indicates Broward County Records
- ℄ - indicates centerline of Right - of - way
- O.R., PG., - indicates Official Record, Page
- P.B.C.R. - indicates Palm Beach County Records
- O P.R.M. NAIL w/McL Cap - indicates Nail with McLaughlin Engineering Co. Cap
- ////////// - indicates Non-Vehicular Access Line

PREPARED BY: McLAUGHLIN ENGINEERING CO. 400 N.E. 3rd AVENUE FORT LAUDERDALE FLORIDA 33301 TEL. (954) 763-7611 FAX (954) 763-7615

SURVEY FILE NO. 08-3-068 McL JOB NO. U-4697

BOUNDARY & TOPOGRAPHIC SURVEY

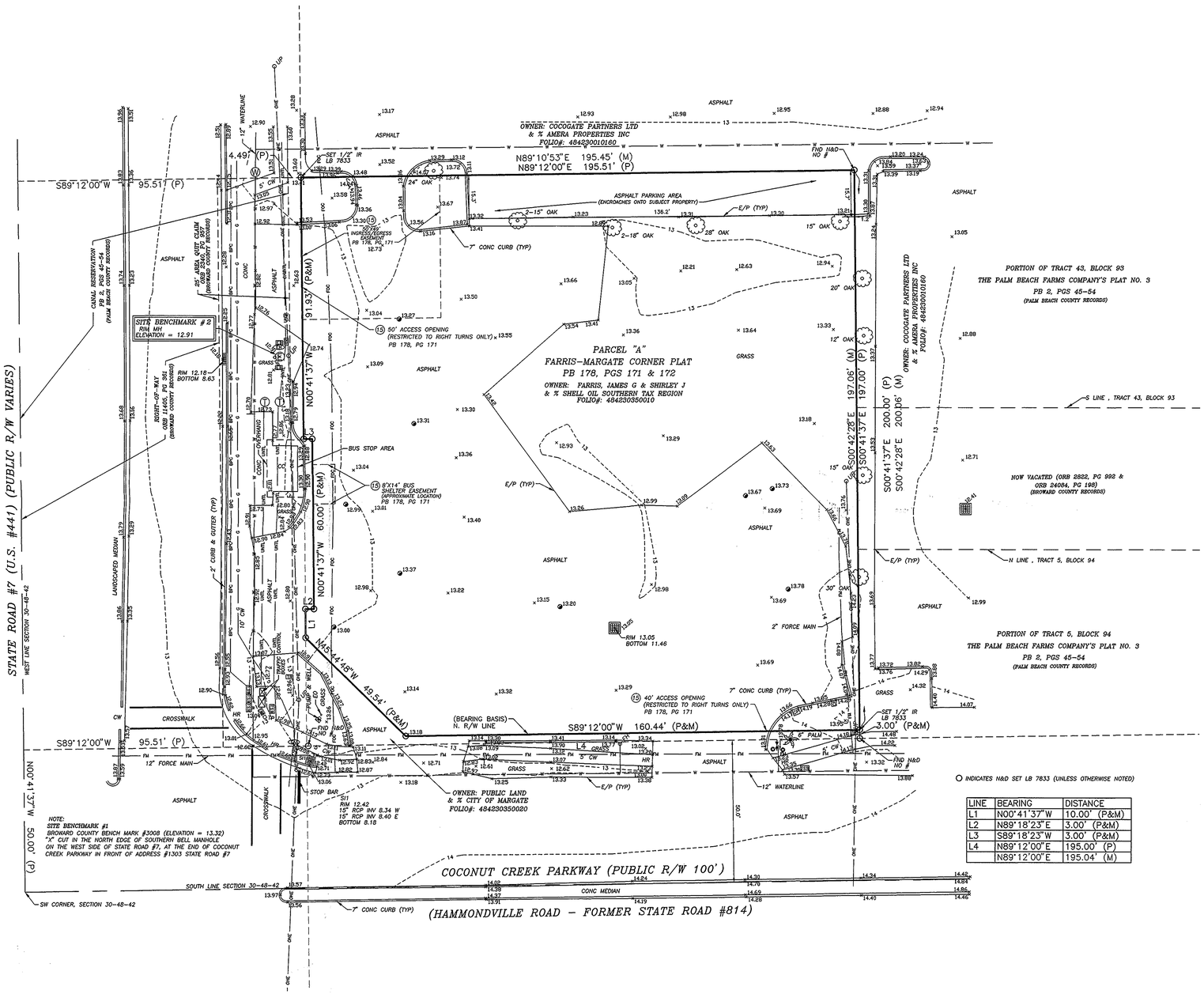

LINE	BEARING	DISTANCE
L1	N00°41'37"W	10.00' (P&M)
L2	N89°18'23"E	3.00' (P&M)
L3	S89°18'23"W	3.00' (P&M)
L4	N89°12'00"E	195.00' (P)
	N89°12'00"E	195.04' (M)

GRAPHIC SCALE
0 20 40
1 INCH = 20 FT.

VICINITY MAP (Not to Scale)

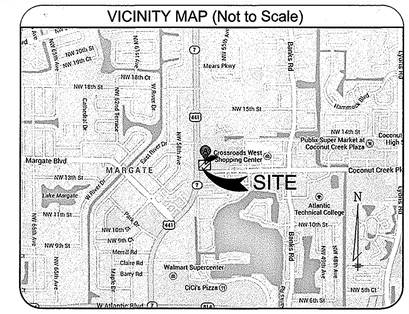

DESCRIPTION:

PARCEL A, FARRIS – MARGATE CORNER PLAT, ACCORDING TO THE PLAT THEREOF AS RECORDED IN PLAT BOOK 178, PAGES 171 AND 172, OF THE PUBLIC RECORDS OF BROWARD COUNTY, FLORIDA.

SCHEDULE B-2 EXCEPTIONS NOTES:

10. INTENTIONALLY DELETED.

11. INTENTIONALLY DELETED.

12. ORDINANCE NO. 2007–30 RECORDED IN OFFICIAL RECORDS BOOK 44650, PAGE 1429, OF THE PUBLIC RECORDS OF BROWARD COUNTY, FLORIDA. (AFFECTS SUBJECT PROPERTY, BLANKET IN NATURE)

13. ORDINANCE NO. 2007–29 RECORDED IN OFFICIAL RECORDS BOOK 44650, PAGE 1467, OF THE PUBLIC RECORDS OF BROWARD COUNTY, FLORIDA. (AFFECTS SUBJECT PROPERTY, BLANKET IN NATURE)

14. INTENTIONALLY DELETED.

15. RESTRICTIONS, DEDICATIONS, CONDITIONS, RESERVATIONS, EASEMENTS AND OTHER MATTERS AS SET FORTH AND/OR SHOWN ON THE PLAT OF FARRIS – MARGATE CORNER PLAT, RECORDED IN PLAT BOOK 178, PAGES 171 AND 172, OF THE PUBLIC RECORDS OF BROWARD COUNTY, FLORIDA, BUT OMITTING ANY COVENANTS OR RESTRICTIONS, IF ANY, BASED UPON RACE, COLOR, RELIGION, SEX, SEXUAL ORIENTATION, FAMILIAL STATUS, MARITAL STATUS, DISABILITY, HANDICAP, NATIONAL ORIGIN, ANCESTRY, OR SOURCE OF INCOME, AS SET FORTH IN APPLICABLE STATE OR FEDERAL LAWS, EXCEPT TO THE EXTENT THAT SAID COVENANT OR RESTRICTION IS PERMITTED BY APPLICABLE LAW. (AFFECTS SUBJECT PROPERTY, AS SHOWN HEREON)

GENERAL SURVEY NOTES:

1. BEARING STRUCTURE BASED ON THE MONUMENTED NORTH RIGHT OF WAY LINE OF COCONUT CREEK PARKWAY; BEING: S89°12'00"W PER PLAT BOOK 178, PAGE 171 PUBLIC RECORDS OF BROWARD COUNTY, FLORIDA.

2. THIS SURVEY REFLECTS ONLY MATTERS OF RECORD AS PROVIDED BY THE CLIENT OR CLIENTS REPRESENTATIVE.

3. THIS SURVEY WAS MADE ON THE GROUND. THE UNDERGROUND UTILITIES SHOWN HAVE BEEN LOCATED FROM FIELD SURVEY INFORMATION AND EXISTING DRAWINGS. THE SURVEYOR MAKES NO GUARANTEE THAT THE UNDERGROUND UTILITIES SHOWN COMPRISE ALL SUCH UTILITIES IN THE AREA, EITHER IN SERVICE OR ABANDONED. THE SURVEYOR FURTHER DOES NOT WARRANT THAT THE UNDERGROUND UTILITIES SHOWN ARE IN THE EXACT LOCATION INDICATED ALTHOUGH HE DOES CERTIFY THAT THEY ARE LOCATED AS ACCURATELY AS POSSIBLE FROM INFORMATION AVAILABLE. THE SURVEYOR HAS NOT PHYSICALLY LOCATED THE UNDERGROUND UTILITIES.

4. THIS SITE LIES IN SHADED ZONE "X", BASED ON FLOOD INSURANCE RATE MAP NO. 12011C0355H, CITY OF MARGATE, FLORIDA AND HAVING AN EFFECTIVE DATE OF AUGUST 18, 2014.

5. ACCORDING TO FLORIDA STATUTES, CHAPTER 472.025, A LAND SURVEYOR SHALL NOT AFFIX HIS SEAL OR NAME TO ANY PLAN OR DRAWING WHICH DEPICTS WORK WHICH HE IS NOT LICENSED TO PERFORM OR WHICH IS BEYOND HIS PROFESSION OR SPECIALTY THEREIN. THEREFORE, WE ARE UNABLE TO CERTIFY AS TO MUNICIPAL ZONING COMPLIANCE, INTERPRETATION OF ZONING CODES OR THE DETERMINATION OF VIOLATIONS THEREOF.

6. THIS SURVEY MADE WITH BENEFIT OF COMMITMENT FOR TITLE NO. 2061–3243753, EFFECTIVE: SEPTEMBER 28, 2014, ISSUED BY FIRST AMERICAN TITLE INSURANCE COMPANY.

7. ELEVATIONS ARE BASED ON BENCHMARK DESIGNATION #3008, BEING: 13.32 FEET, (NGVD 29), PUBLISHED BY THE HIGHWAY CONSTRUCTION & ENGINEERING DIVISION OF BROWARD COUNTY, FLORIDA.

CERTIFIED TO:
Branch Banking and Trust Company, a North Carolina banking corporation; James G. Farris; Shirley J. Farris; GrayRobinson, P.A.; Alston & Bird LLP; First American Title Insurance Company

LEGEND

- AIR RELEASE VALVE
- AUTO SPRINKLER
- BB – BOTTOM OF BANK
- BC – BACK OF CURB
- BFP – BACKFLOW PREVENTER
- BLK – BLOCK
- BFP – BACK FLOW PREVENTER
- BM – BENCHMARK
- BOLLARD
- BPC – BURIED POWER CABLE
- CALC – CALCULATED
- C&M – CALCULATED & MEASURED
- Δ – CENTRAL ANGLE
- CBW – CONCRETE BLOCK WALL
- CC – COVERED CONCRETE
- CF – CONCRETE FLUME
- CHW – CONCRETE HEAD WALL
- CLF – CHAIN LINK FENCE
- ℄ – CENTERLINE
- CM – CONCRETE MONUMENT
- CMP – CORRUGATED METAL PIPE
- CO – CLEAN OUT
- CONC – CONCRETE
- COVD – COVERED
- CP – CONCRETE PAD
- CW – CONCRETE WALKWAY
- D&M – DEED/DESC & MEASURED
- DE – DRAINAGE EASEMENT
- DESC – DESCRIPTION
- DOT INLET
- DP – DUMPSTER PAD
- DW – DRIVEWAY
- ELECTRIC METER
- EO – ELECTRICAL OUTLET
- ESMT – EASEMENT
- E/P – EDGE OF PAVEMENT
- FIRM – FLOOD INSURANCE RATE MAP
- FFE – FINISHED FLOOR ELEVATION
- FH – FIRE HYDRANT
- FL – FLOW LINE
- FLOOD LIGHT
- FND – FOUND
- FOC – FIBER OPTIC CABLE
- FP – FLAG POLE
- GAS LINE
- GAS METER
- GUY WIRE ANCHOR
- HANDICAP PARKING
- HR – HANDICAP RAMP
- INV – INVERT ELEVATION
- IP – IRON PIPE
- IR – IRON ROD
- STORM JUNCTION BOX
- L – ARC LENGTH
- LIGHT POLE
- LSA – LANDSCAPED AREA
- MEAS – MEASURED
- MF – METAL FENCE
- ML – METAL LID
- MS – METAL SHED
- MITERED END SECTION
- MONITORING WELL
- N&D – NAIL & DISK
- NGVD – NATIONAL GEODETIC VERTICAL DATUM
- NTS – NOT TO SCALE
- OHE – OVERHEAD ELECTRIC
- OL – ON LINE
- ORB – OFFICIAL RECORDS BOOK
- OW – OVERHEAD WIRE
- OWW – OVERHEAD WALKWAY
- PB – PLAT BOOK
- PC – POINT OF CURVATURE
- PDOT – PER DEPARTMENT OF TRANSPORTATION R/W MAP
- PEP – PER ENGINEERING PLANS
- PG – PAGE
- PI – POINT OF INTERSECTION
- P&M – PLAT & MEASURED
- POB – POINT OF BEGINNING
- POC – POINT OF COMMENCEMENT
- PP – POWER POLE
- PS – PARKING SPACES
- PT – POINT OF TANGENCY
- PVC – PLASTIC PIPE
- R – CURVE RADIUS
- RP – RAMP
- RCP – REINFORCED CONCRETE PIPE
- R/W – RIGHT OF WAY
- SANITARY MANHOLE
- SAN – SANITARY LINE
- SN – SIGN
- SWF – STOCK WIRE FENCE
- 00.00 – SPOT ELEVATION
- –SD– – STORM/DRAIN LINE
- STORM MANHOLE
- STORM INLET
- TELEPHONE MANHOLE
- TP – TRAFFIC POLE
- TRAFFIC SIGN
- TRANSFORMER/JUNCTION BOX
- TR – TELEPHONE RISER
- TSB – TRAFFIC SIGNAL BOX
- TSW – TRAFFIC SIGNAL WIRE
- TV – CABLE TV RISER
- TYP – TYPICAL
- UE – UTILITY EASEMENT
- UP – UTILITY POLE
- –W– – WATER LINE
- WF – WOOD FENCE
- WATERLINE MANHOLE
- WATER VALVE
- WATER METER
- NUMBER
- EASEMENT NUMBER

ADDRESS:

5700 Coconut Creek Parkway
Margate, FL 33063

Job Information

JOB NO.	900992
CF NO.	BC178–171
FIELD DATE:	10–06–14
SCALE:	1" = 20'
DRAWN BY:	PJT

Revisions

Date:	Description	By:
10–15–14	Added Title Commitment	PJT
10–27–14	Revised per revised Title Commitment	RCJ

Altamax Surveying
910 Belle Avenue, Suite 1140
Casselberry, FL 32708
Phone: (407) 677-0200
Licensed Business No. 7833
www.altamaxsurveying.com
LB 7833
Robert C. Johnson PSM 5551
"NOT VALID WITHOUT THE SIGNATURE AND THE ORIGINAL RAISED SEAL OF THIS FLORIDA LICENSED SURVEYOR AND MAPPER."

SHEET 1 OF 1