CITY OF
MARGATE
Together We Make It Great

CITY OF MARGATE

HOLIDAY SPRINGS BOULEVARD MEDIAN IRRIGATION PROJECT
BID NO 2016-009

BID BOND REQUIRED: YES

PERFORMANCE AND PAYMENT BONDS REQUIRED: YES

BID OPENING DATE: March 23, 2016

BID OPENING TIME: 11:00 AM

ALL PROPOSALS MUST BE RECEIVED BY THE PURCHASING DIVISION PRIOR TO THE DATE AND TIME SPECIFIED ABOVE

TABLE OF CONTENTS

PART I – GENERAL CONDITIONS	PAGE NO.
BASIC DEFINITIONS	3 – 4
NOTICE INVITING BIDS	5 – 6
INSTRUCTIONS TO BIDDER	7 – 28
SPECIAL CONDITIONS	29
BID PROPOSAL FORM	30 – 31
SCHEDULE OF BID PRICES	32
BIDDER'S GENERAL INFORMATION	33 – 34
BID BOND	35
PERFORMANCE BOND	36
PAYMENT BOND	37
REFERENCE SHEET	38
COMPLIANCE WITH OSHA	39
STATEMENT OF NO BID	40
DRUG FREE WORKPLACE FORM	41
OFFEROR'S QUALIFICATION FORM	42 – 46
SAMPLE INSURANCE FORM	Attachment "A"

PART II – TECHNICAL SPECIFICATIONS – N/A (See Drawings/Plans)

PART III – DRAWINGS/PLANS

1.1 BASIC DEFINITIONS

Whenever used in these Bid Specifications or in an ensuing agreement, the following terms have the meanings indicated which are applicable to both singular and plural:

1.1.1 AGREEMENT – The written agreement between the City and Contractor covering the Work to be performed including other documents that are attached to the Agreement or made a part thereof.

1.1.2 CHANGE ORDER – A document which is signed by Contractor and City and authorizes an addition, deletion or revision in the Work within the general scope of this Agreement, or an adjustment in the Contract Price or the Contract Time, issued on or after the effective date of the Agreement.

1.1.3 CITY – The City Commission of the City of Margate, Florida with whom the Contractor has entered into an Agreement and for whom the Work is to be provided.

1.1.4 CONTRACTOR - A person or company that undertakes a contract to provide materials or labor to perform a service or do a job.

1.1.5 BID DOCUMENTS – The bid documents consist of the General and Special Conditions, Technical (Drawings, Plans and Specifications), Non-Collusion Affidavit, Contract, Notice of Award, Certificate of Insurance, Bonds and any additional documents which are required to be submitted under the Contract, and all amendments, modifications and supplements, Change Orders and Work Directive Changes issued on or after the effective date of the Contract.

1.1.6 DEFECTIVE – An adjective which when modifying the Work refers to the Work that is unsatisfactory, faulty or deficient, or does not conform to the Bid Documents, or does not meet the requirements of any inspection, reference standard, test or approval referred to in the Bid Documents, or has been damaged prior to final payment.

1.1.7 DRAWINGS - The drawings which show the character and scope of the Work to be performed and which are referred to in the Bid Documents.

1.1.8 EFFECTIVE DATE OF THE AGREEMENT – The date indicated in the Agreement on which it becomes effective, but if no such date is indicated it means the date on which the Agreement is signed and delivered by the last of the two parties to sign and deliver or upon receipt of a signed purchase order by the Contractor.

1.1.9 ENGINEER - N/A

1.1.10 FIELD ORDER – A written order issued by the City's Representative or City which orders minor changes in the Work but which does not involve a change in the Contract Price or the Contract Time.

1.1.11 NOTICE TO PROCEED – A written notice given by the City to Contractor fixing the date on which the Contract Time will commence to run, and on which Contractor shall start to perform Contractor's obligations under the Bid Documents.

1.1.12 PROJECT – The total construction for which the Contractor is responsible under this Agreement, including all labor, materials, equipment and transportation used or incorporated in such construction or for the completion of the project and delivery.

1.1.13 SPECIFICATIONS - Those portions of the Bid Documents consisting of written descriptions of materials, equipment, construction systems, standards and workmanship as applied to the Work and certain administrative details applicable thereto.

1.1.14 SUBCONTRACTOR – An individual, firm, or corporation having a direct contract with Contractor or with any other subcontractor for the performance of a part of the Work.

1.1.15 SUPPLIER – A manufacturer, fabricator, supplier, distributor, materialman or vendor.

1.1.16 WORK – Work is a result of performing services, specifically, including but not limited to construction, labor furnished, soil borings, equipment and materials used or incorporated in the construction of the entire project as required by the Bid Documents.

1.1.17 WORK CHANGE DIRECTIVE – A written directive to Contractor issued on or after the effective date of the Agreement and signed by City and recommended by Engineer or City ordering an addition, deletion or revision in the Work. A Work Change Directive shall not change the Contract Price or Time, but is evidence that the parties expect that the change directed or documented by a Work Change Directive will be incorporated in a subsequently issued Change Order following negotiations by the parties as to its effect, if any, on the Contract Price or Time.

1.1.18 WRITTEN AMENDMENT – A written amendment of the Bid Documents, signed by City or Contractor on or after the Effective Date of the Agreement and normally dealing with the non-architectural, or non-technical aspects rather than strictly work related aspects of the Bid Documents.

NOTICE INVITING BIDS

SUBMITTING PROPOSALS: Sealed bids will be received in the Purchasing Division Office, Finance Department, 5790 Margate Boulevard, Margate, FL 33063 until 11:00 A.M. Monday, March 23, 2016 for a completed project to provide all materials, labor, equipment, tools, transportation and permits for the Holiday Springs Boulevard Median Irrigation Project for the City of Margate.

All bids received will be publicly opened and read at the close of bidding in the Commission Chambers of City Hall. All bidders or their representatives are invited to be present.

It will be the sole responsibility of the bidder to deliver their proposal to the Purchasing Division on or before the date and time specified. Bids received after the specified date and time will not be considered, and will be returned unopened to the bidder.

NO FAXED OR ELECTRONICALLY TRANSMITTED BIDS WILL BE ACCEPTED. Bids must be submitted in a sealed envelope and plainly marked on the outside of the envelope; the bidder's name and address followed by " **SEALED BID FOR "BID 2016-009 HOLIDAY SPRINGS MEDIAN IRRIGATION PROJECT"** address where bid is to be delivered or mailed to, and the date and time of the bid opening.

Bids must be submitted on the Bid Proposal Form(s) provided herein. Failure to do so will be cause for bid to be rejected. Proposals having an erasure or correction must be initialed by the bidder in ink. Bids shall be signed in ink; all quotations shall be typewritten and filled in with pen and ink.

COMPLETION OF WORK: The Work shall be completed within 60 calendar days after the commencement date stated in the Notice to Proceed or Purchase Order.

The Bidder shall guarantee the total bid price for a period of 90 days from the date of bid opening.

PROJECT ADMINISTRATION: All technical questions relative to the Work shall be directed to:

Mr. Michael Jones, CPRP
Director of Parks & Recreation
6199 NW 10th Street
Margate, FL 33063
(954) 972-6458

The City of Margate reserves the right to waive informalities in any bid and further reserves the right to reject any and all bids and to take any other action that may be deemed necessary in its best interest.

Mr. Spencer L. Shambray, CPPB
Purchasing Supervisor
City of Margate Purchasing Division
5790 Margate Boulevard
Margate, FL 33063
(954) 935-5346

GENERAL CONDITIONS

INSTRUCTIONS TO BIDDERS

1. **DEFINED TERMS:** Terms used in these Instructions to Bidders and the Notice Inviting Bids which are defined in the General Conditions, have the meaning assigned to them in the General Conditions. The term "bidder" means one who submits a bid directly to City, as distinct from a sub-bidder, who submits a bid to a bidder.

2. **COMPETENCY OF BIDDER:** In selecting the bid which best meets the interests of the City, consideration will be given not only to the financial standing, but also to the general competency of the bidder for the performance of the Work covered by the bid. To this end, each bid shall be supported by a statement of the bidder's experience as of recent date on the form entitled **"Reference Sheet"** herein. A "NO BID" for the Work will be accepted from a contractor who does not hold a valid contractor's license in the State and County where the work is to be performed (if required by State or County) applicable to the type of work bid upon at the time of opening bids.

3. **DISQUALIFICATION OF BIDDER:** More than one bid from an individual firm, partnership, corporation, or association under the same or different names will not be considered. If the City believes that any bidder is interested in more than one bid for the Work contemplated, all bids in which such bidder is interested will be rejected. If the City believes that collusion exists among the bidder's, all bids will be rejected.

4. **BIDDER'S EXAMINATION OF BID DOCUMENTS AND SITE:**

4.1 It is the responsibility of each bidder before submitting a bid, to:

(a) Examine the Bid Documents thoroughly,
(b) Visit the site to become familiar with local conditions that may affect cost, progress, or performance of Work,
(c) Consider federal, state and local laws and regulations that may affect cost, progress, or performance of Work,
(d) Study and carefully correlate the bidder's observations with the Bid Documents, and,
(e) Notify the City or the City's Representative of all conflicts, errors, or discrepancies in the Bid Documents.

4.2 Information and data reflected in the Bid Documents with respect to underground utilities at or contiguous to the site is based upon information and data furnished to the City or the City's Representative by the owners of such underground utilities or others, and the City does not assume

responsibility for the accuracy or completeness thereof unless it is expressly provided otherwise in the Agreement or Bid Documents.

4.3 Provisions concerning responsibilities for the adequacy of data furnished to prospective bidders on subsurface conditions, underground utilities and other physical conditions, and possible changes in the Bid Documents due to differing conditions appear in the Agreement.

4.4 Before submitting a bid, each bidder will, at bidder's own expense, make or obtain any additional examinations, investigations, explorations, tests, and studies and obtain any additional information and data which pertain to the physical conditions (surface, sub-surface, and underground utilities) at or contiguous to the site or otherwise which may affect cost, progress of performance on the Work and which the bidder deems necessary to determine the bid for performing the Work in accordance with the time, price, and other terms and conditions of the Bid Documents.

4.5 On request in advance, the City will provide each bidder access to the site to conduct such explorations and tests as each bidder deems necessary for submission of a bid. Bidder shall fill all holes and shall clean up and restore the site to its former condition upon completion of such explorations.

4.6 The land upon which the work is to be performed, rights-of-way and easements for access thereto and other land designated for use by the Contractor in performing the Work are identified in the Bid Documents. All additional land and access thereto required for temporary construction facilities or storage of materials and equipment are to be provided by the Contractor. Easements for permanent structures or permanent changes in existing structures are to be obtained and paid for by the City unless otherwise provided in the Bid Documents.

4.7 The submission of a bid will constitute an incontrovertible representation by the bidder that the bidder has complied with every requirement of "Bidders Examination of Bid Documents and Site" contained herein, that without exception the bid is premised upon performing the Work required by the Bid Documents and such means, methods, techniques, sequences or procedures as may be indicated in or required by the Bid Documents, and that the Bid Documents are sufficient in scope and detail to indicate and convey understanding of all terms and conditions for performance of the Work.

5. **INTERPRETATIONS:** All questions about the meaning or intent of the Bid Documents are to be directed to the City or the City's Representative in writing. Interpretations or clarifications considered necessary in response to such questions will be issued by written Addenda to all parties recorded by the City or the City's Representative as having received the Bid Documents. Questions received less than seven (7) days prior to the date for opening of

bids may not be answered. Only questions answered by formal written addenda will be binding. Oral and other interpretations or clarifications will be without legal effect. It is the Contractor's responsibility to contact the City prior to the bid opening to determine if any addenda have been issued on the project.

6. **BID SECURITY, BONDS:** Each bid (if required) shall be accompanied by a certified or cashier's check or approved Bid Bond in the amount stated in the Bid Documents. Said check or bond shall be made payable to the City and shall be given as guarantee that the bidder, if awarded the bid will enter into an Agreement with the City, and shall furnish the necessary insurance certificates, payment and performance Bonds (if required), each of said bonds to be in the amount stated in the Bid Documents or Agreement. In case of refusal or failure by bidder to enter into an Agreement, the check or bid bond shall be forfeited to the City. If the bidder elected to furnish a bid bond as its bid security, the bidder shall use the Bid Bond form bound herein, or one conforming substantially to it in form. The same shall apply to the use of the performance and payment bond forms.

   Pursuant to the requirements of Section 255.05(I) (a), Florida Statutes, it shall be the duty of the Contractor to record the aforesaid payment and performance bonds in the public records of Broward County, with the Contractor to pay all recording costs.

7. **RETURN OF BID SECURITY:** Within 14 days after award of the bid or Contract, the City will return the bid securities accompanying the bids not considered in making the award. All other bid securities will be held until the Agreement has been fully executed. They will then be returned to the respective bidders whose bids they accompany.

8. **BID FORM:** The bid shall be made on copies of the bidding schedule bound herein.

9. **SUBMISSION OF BIDS:** Refer to **NOTICE INVITING BIDS.**

10. **DISCREPANCIES IN BIDS:** In the event there is more than one bid item in a bidding schedule, the bidder shall furnish a price for all bid items in the schedule, and failure to do so will render the bid non-responsive and may cause its rejection. In the event there are unit price bid items in a bidding schedule and the "amount" indicated for a unit price bid item does not equal the product of the unit price and quantity, the unit price shall govern and the amount will be corrected accordingly, and the Contractor shall be bound by said correction. In the event there is more than one bid item in the bidding schedule and the total indicated for the schedule does not agree with the sum of the prices bid on the individual items, the prices bid on the individual items

shall govern and the total for the schedule will be corrected accordingly, and the Contractor shall be bound by said correction.

11. **QUANTITIES OF WORK:** The quantities of work or materials stated in unit price items of the bid are supplied only to give an indication of the general scope of the Work; the City does not expressly or by implication agree that the actual amount of work or material will correspond therewith, and reserves the right after award to increase or decrease the amount of any unit price item of the Work by an amount up to and including 25 percent of any bid item, without a change in the unit price, and shall include the right to delete any bid item in its entirety, or to add additional bid items up to and including an aggregate total amount not to exceed 25 percent of the Contract Price.

12. **WITHDRAWAL OF BID:** The bid may be withdrawn by the bidder by means of a written request, signed by the bidder or its properly authorized representative. Such written request must be delivered to the place stipulated in the **NOTICE INVITING BIDS** for receipt of bids prior to the scheduled closing time for receipt of bids.

13. **MODIFICATIONS AND UNAUTHORIZED ALTERNATIVE BIDS:** Unauthorized conditions, limitations, or provisos attached to the bid will render it informal and may cause its rejection as being non-responsive. The completed bid forms shall be without interlineations, alterations or erasure in the printed text. Alternative bids will not be considered unless called for. Oral, telegraphic, telephonic, faxed or electronically transmitted bid or modifications will not be considered.

14. **OR EQUAL: (Unless otherwise specified in the Bid Documents)** Manufacturer's name, brand name and model number are used in these specifications for the sole purpose of establishing minimum requirements of level of quality, standards of performance and design required and is in no way intended to prohibit the bidding of other manufacturer's items of equal material. Equal may be bid providing units bid are equal to or exceed the quality, standards of performance, design, etc. to the item specified.

    Where equal is bid, proposals must be accompanied with factory information sheets (specifications, brochures, etc.) of unit bid as equal. The City shall be the sole judge of equality and our decision will be final in the City's best interest.

    Any equipment delivered under this proposal will be new, the manufacturer's latest model, and carry the standard factory warranty.

15. **AWARD OF BID/CONTRACT:** Award of a bid/contract, if it be awarded, will be made to the bid which is deemed to be in the best interest of the City of Margate as determined in the sole discretion of the City. Unless otherwise

specified, any such award will be made within the period stated in the **NOTICE INVITING BIDS** that the bids are to remain open. Unless otherwise indicated, a single award will be made for all the bid items in an individual bidding schedule. In the event the Work is contained in more than one bidding schedule, the City may award schedules individually or in combination. In the case of two (2) bidding schedules which are alternative to each other, only one (1) of such alternative schedule will be awarded. The City reserves the right to accept or reject any or all bids/parts of bids, to waive informalities in any bid, or to take any other action that is deemed to be in the best interest of the City.

16. **EXECUTION OF AGREEMENT:** The bidder to whom award is made shall execute a written agreement on the form of agreement provided, or by accepting City's purchase order and shall secure all insurance, and furnish all certificates and bonds required by the Bid Documents within ten (10) calendar days after receipt of the agreement forms or purchase order from the City. Failure or refusal to enter into an agreement or accept City's purchase order as herein provided or to conform to any stipulated requirements in connection therewith shall be just cause for annulment of the award and forfeiture of the Bid Security. If the bidder who has been awarded the bid pursuant to Paragraph 15 refuses or fails to execute the agreement, the City may award the Contract to whichever bidder it determines next best serves its interest. On the failure or refusal of such second or third bidder (who was awarded the contract) to execute the agreement, each such bidder's bid security shall be likewise forfeited to the City.

17. **SITE INSPECTION:** Bidder is responsible for a site inspection and final determination of all materials, labor and equipment required in their proposal. Contractor will obtain complete data at the site and inspect surfaces that are to receive his work. Before proceeding with work, Contractor will be solely responsible for accuracy of measurements and laying out of work; and will correct errors or defects due to faulty measurements taken, information obtained, layout, or due to failure to report discrepancies.

18. **GOVERNMENT RESTRICTIONS:** In the event any governmental restrictions may be imposed which would necessitate alteration of the material/quality, workmanship, or performance of the items/services offered on the bid prior to delivery/performance, it shall be the responsibility of the successful bidder to notify the City at once, indicating in their letter the specific regulation which required an alteration. The City reserves the right to accept any such alteration, including any price adjustment occasioned hereby, or to cancel the contract at no further expense to the City.

19. **PUBLIC ENTITY CRIMES INFORMATION STATEMENT:** "A person or Affiliate who has been placed on the convicted vendor list following a conviction for a Public Entity Crime may not submit a bid on a contract to

provide any goods or services to a public entity, may not submit a bid on a contract with a public entity for the construction or repair of a public building or public work, may not submit bids on leases of real property to a public entity, may not be awarded or perform work as a contractor, supplier, subcontractor, or consultant under a contract with any public entity, and may not transact business with any public entity in excess of the threshold amount provided in Section 287.017 for CATEGORY TWO for a period of 36 months from the date of being placed on the convicted vendor list."

20. **DISCRIMINATORY VENDOR LIST:** An entity or affiliate who has been placed on the discriminatory vendor list may not submit a bid on a contract to provide goods or services to a public entity, may not submit a bid on a contract with a public entity for the construction or repair of a public building or public work, may not submit bids on leases of real property to a public entity, may not award or perform work as a contractor, supplier, subcontractor, or consultant under contract with any public entity, and may not transact business with any public entity.

21. **COPYRIGHTS OR PATENT RIGHTS:** Bidder warrants that there has been no violation of copyrights or patent rights in manufacturing, producing, or selling the goods shipped or ordered, as a result of this bid.

22. **TAXES:** The City is exempt from all Federal and State taxes. Contractor shall pay all sales, consumer, use and other similar taxes required, to be paid by the Contractor in accordance with the laws and regulations of the State of Florida and its political subdivisions. Contractor is responsible for reviewing the pertinent State Statutes involving such taxes and complying with all requirements.

23. **STANDARDS OF SAFETY:** The Bidder warrants that the product(s) and services supplied to the City conform in all respects to the standards set forth in the Occupational Safety and Health Act and its amendments and to any industry standards if applicable. Bid Proposal must be accompanied by Material Safety Data Sheet(s). (See attachment – Compliance with Occupational Safety and Health Act).

    The Contractor shall take reasonable precautions for safety of, and shall provide reasonable protection to prevent damage, injury or loss to; (1) employees on the Work and other persons who may be affected thereby; (2) the work and materials and equipment to be incorporated therein; and (3) other property at or adjacent to the site.

    The Contractor shall give notices and comply with applicable laws, ordinances, rules, regulations and orders of public authorities bearing on the safety of persons and property and their protection from damage, injury, or loss.

Roadways have school crossing areas that are active before 8:30 AM and after 2:00 PM. Contractor shall keep all crosswalk areas clear during periods when school children are present. All sidewalks shall be kept clear of any excess debris and shall not be barricaded or taped off during nights and weekends.

Contractor shall be responsible for initiating, maintaining and supervising all safety precautions and programs in connection with the Work to prevent damage, injury, or loss to all employees on the work site and other persons and organizations who may be affected thereby; all the work and materials and equipment to be incorporated therein, whether in storage on or off site; and other property at the site or adjacent thereto.

Contractor shall be liable for damage or loss (other than damage or loss to property insured under the property insurance provided or required by the Bid Documents to be provided by the City) to property at the site caused in whole or in part by the Contractor, a subcontractor of the Contractor or anyone directly or indirectly employed by either of them, or by anyone for whose acts they may be liable.

24. **NO BID:** Refer to 'STATEMENT OF NO BID" form incorporated into the bid proposal document.

25. **SILENCE OF SPECIFICATIONS:** The apparent silence of this specification and any supplemental specifications to any details or the omission from same of any detailed description concerning any point shall be regarded as meaning that only the best commercial practices are to prevail and that only materials of first quality and correct type, size, and design are to be used. All workmanship is to be first quality. All interpretations of these specifications shall be made upon the basis of this statement.

26. **CITY PERMITS:** The Contractor shall be required to obtain all necessary permits from the City Engineering and/or Building Departments. City permit fees will not be waived and should be included in your bid proposal. A City permit fee schedule can be obtained from the City's website at www.margatefl.com under the Building Department by clicking on the link provided for permit fees.

27. **NOTICE TO PROCEED: The Contractor shall commence work within ten (10) calendar days after receipt** of Notice to Proceed or Purchase Order from the City unless otherwise stated

28. **LIABILITY INSURANCE:** The bidder will assume the full duty, obligation and expense of obtaining all insurance required. The City shall be **additional insured** as indicated on sample insurance certificate. The bidder shall be

liable for any damages or loss to the City occasioned by negligence of the bidder or its agents or any person the bidder has designated in the completion of its contract as a result of the bid. The successful bidder shall furnish to the Purchasing Division, City of Margate, 5790 Margate Blvd., Margate, Florida 33063 original certificates of insurance which indicate that the insurance coverage has been obtained or otherwise secured in a manner satisfactory to the City in an amount equal to 100% of the requirements provided herein and shall be presented to City prior to issuance of any contract(s) or award(s) document(s) which meets the requirements as outlined on sample certificate. Additionally, any subcontractor hired by the Contractor for this project shall provide insurance coverage as stated herein. City shall not be responsible for purchasing and maintaining any insurance to protect the interests of Contractor, subcontractors or others on the Work. City specifically reserves all statutory and common law rights and immunities and nothing herein is intended to limit or waive same including, but not limited to, the procedural and substantive provisions of Florida Statute 768.28 and Florida Statute 95.11.

29. **IDENTICAL TIE BIDS:** Refer to the **Drug Free Workplace Program Form** attachment for information on how tie bids will be handled.

30. **CONFLICT OF INTEREST:** For purposes of determining any possible conflict of interest, all proposers must disclose if any City employee is also an owner, corporate officer, or employee of their business. If such a relationship(s) exist, the Proposer must file a statement with the Supervisor of Elections, pursuant to Florida State Statute 112.313.

31. **FORCE MAJEURE:** Seller's failure to make, or buyer's failure to take, any delivery or deliveries when due, if caused by Force Majeure as hereinafter defined, shall not constitute a default hereunder nor subject the party so failing to any liability to the other, provided however, the party affected by such Force Majeure shall promptly notify the other of the existence thereof and its expected duration and the estimated effect thereof upon its ability obligations hereunder.

    Such party shall promptly notify the other party when such Force Majeure circumstances have ceased to affect its ability to perform its obligations hereunder. The quantity to be delivered hereunder shall be reduced to the extent of the deliveries omitted for such cause or causes, unless both parties agree that the total quantity delivered hereunder remain unchanged. As used herein, the term Force Majeure shall mean and include an ACT OF GOD or the public enemy, accident, explosion, fire, storm, earthquake, flood, drought, perils of the sea, strikes, lockouts, labor troubles, riots, sabotage, embargo, war (whether or not declared and whether or not the United States is a participant) Federal, State, or Municipal Law, regulation, order, license, priority, seizure, requisition, or allocation, failure to delay from transportation, shortage of or

inability to obtain supplies, equipment, fuel, labor, or any other circumstances of a similar or different nature beyond the reasonable control of the party so failing.

32. **WARRANTIES:**

Warranty of Title:

The Contractor warrants to the City that it possesses good, clear and marketable title to all equipment and materials provided hereunder and there are no pending liens, claims or encumbrances whatsoever against said equipment and materials.

Warranty of Specifications:

The Contractor warrants that all equipment, materials and workmanship furnished, whether furnished by the Contractor or its subcontractors and suppliers, will comply with the specifications, drawings and other descriptions supplied or adopted and that all services will be performed in a workmanlike manner.

Warranty of Merchantability:

Contractor warrants that any and all equipment to be supplied pursuant to the Agreement is merchantable, free from defects, whether patent or latent in material or workmanship and fit for the ordinary purposes for which it is intended.

33. **CANCELLATION FOR UNAPPROPRIATED FUNDS:** The obligation of the City for payment to a Contractor is limited to the availability of funds appropriated in the current fiscal period, and continuation of the Contract into a subsequent fiscal period is subject to appropriation of funds, unless otherwise authorized by law.

34. **PRESENCE OF ASBESTOS MATERIALS:** If in the course of work, the Contractor encounters any existing materials which he suspects contain asbestos, the Contractor will stop work in that area immediately and notify the City.

35. **INTENT:** It is the intent of the Bid Documents to describe a functionally complete project in accordance with the plans and specifications. Any work, materials or equipment that may reasonably be inferred from the Bid Documents as being required to produce the intended result will be supplied whether or not specifically called for. When words which have a well-known technical or trade meaning are used to describe work, materials or equipment, such words shall be interpreted in accordance with that meaning.

Reference to standard specifications, manuals or codes of any technical society, organization or association, or to the laws or regulations of any governmental authority, whether such reference be specific or by implication, shall mean the latest standard specification, manual, code, laws, or regulations in effect at the time of contract award, except as may be otherwise specifically stated. However, no provision of any referenced standard specification, manual or code (whether or not specifically incorporated by reference in the Bid Documents) shall be effective to change the duties and responsibilities of City, Contractor, or any of their consultants, agents or employees from those set forth in the Bid Documents.

36. **CONFLICT, ERROR OR DISCREPANCY:** If, during the performance of the Work, Contractor finds a conflict, error or discrepancy in the Bid Documents, Contractor shall so report to City or City's Representative in writing at once, and shall obtain a written interpretation or clarification from City or City's Representative before proceeding with the Work affected thereby.

37. **AMENDING AND SUPPLEMENTING BID DOCUMENTS:** The Bid Documents may be amended to provide for additions, deletions and revisions in the Work or to modify the terms and conditions thereof in one or more of the following ways:

    1. Change Order,
    2. Formal Written Amendment, or
    3. Work Change Directive.

38. **REPRESENTATION OF CONTRACTOR:** Execution of the Contract or acceptance of a purchase order by the Contractor is a representation that Contractor has visited the site and become familiar with the local conditions under which the Work is to be performed.

39. **BEFORE COMMENCING OPERATIONS:** Before undertaking each part of the Work, Contractor shall carefully study and compare the Bid Documents and check and verify pertinent figures shown thereon. Contractor shall promptly report in writing to City or City's Representative any conflict, error or discrepancy which Contractor may discover and shall obtain a written interpretation or clarification from City or City's Representative before proceeding with any Work affected thereby.

40. **CONTRACTOR SERVICES AND RESPONSIBILITIES:**

    40.1 The Contractor shall assist the City or City's Representative in filing documents required to obtain necessary approvals of governmental authorities having jurisdiction over the project.

40.2 Materials: Unless otherwise specified herein, Contractor shall furnish, pay for and assume full responsibility for all materials, equipment, transportation, machinery, tools, appliances, water, heat, utilities and all other facilities and services necessary for the furnishing, performance, testing, start-up and proper completion of the Work.

Contractor warrants that all materials and equipment shall be of good quality and new, unless otherwise provided in the Bid Documents and that the work will be free from defects whether patent or latent in nature. All materials and equipment shall be applied, installed, connected, erected, used, cleaned, and conditioned in accordance with the instructions of the applicable supplier except as otherwise provided in the Bid Documents.

40.3 The Contractor shall be responsible for and shall coordinate all construction means, methods, techniques, sequences and procedures.

40.4 The Contractor shall keep the City and City's Representative (if applicable) informed of the progress and quality of the Work.

40.5 If requested in writing by the City, the Contractor, with reasonable promptness and in accordance with time limits agreed upon, shall interpret the requirements of the Bid Documents and shall decide, subject to determination by the Architect or Engineer (if applicable), subject to demand for arbitration, claims, disputes and other matters in question relating to performance thereunder by both City and Contractor. Such interpretations and decisions shall be in writing, shall not be presumed to be correct, and shall be given such weight as the arbitrator(s) or the court shall determine.

40.6 The Contractor shall correct work which does not conform to the Bid Documents.

40.7 Contractor shall comply with and give all notices required by laws, ordinances, rules, regulations and lawful orders of public authorities applicable to the performance of the Work. City shall not be responsible for monitoring Contractor's compliance with any laws and regulations. Contractor shall promptly notify City if the Bid Documents are observed by Contractor to be at variance therewith.

40.8 The Contractor shall pay royalties and license fees. The Contractor shall defend suits or claims for infringement of patent rights and shall hold the City harmless from loss on account thereof, except that the City shall be responsible for such loss when a particular design, process or product of a particular manufacturer is required by the City. However, if the Contractor has reason to believe the use of a required design process or product is an infringement of a patent, the Contractor shall be responsible for such loss unless such information is promptly given to the City.

40.9 The Contractor shall be responsible to the City for acts and omissions of the Contractor's employees and parties in privity of Contract with the Contractor to perform a portion of the Work, including their agents and employees.

40.10 The Contractor shall keep the premises free from accumulation of waste materials or rubbish caused by the Contractor's operation. At the completion of the Work, the Contractor shall remove from the project the Contractor's tools, construction equipment, machinery, surplus materials, waste materials and rubbish.

40.11 The Contractor shall prepare Change Orders for the City or City Representative's approval and execution in accordance with this Agreement and shall have authority to make minor changes in the design and construction consistent with the intent of this Agreement not involving an adjustment in the contract sum or an extension of the contract time. The Contractor shall promptly inform the City or City's Representative in writing, of minor changes in the design and construction.

40.12 The Contractor shall notify the City or City's Representative when the Work or an agreed upon portion thereof is substantially completed by issuing a Certificate of Substantial Completion which shall establish the Date of Substantial Completion; shall state the responsibility of each party for security, maintenance, heat, utilities, damage to the Work and insurance; shall include a list of items to be completed or corrected; and shall fix the time within which the Contractor shall complete items listed therein.

40.13 Contractor shall supervise and direct the Work competently and efficiently, devoting such attention thereto and applying Contractor's best skill, attention and expertise. Contractor shall be solely responsible for and have control over the means, methods, techniques, sequences and procedures of construction. Contractor shall be responsible to see that the finished Work complies accurately with the Bid Documents.

40.14 Contractor shall be fully responsible to City for all acts and omissions of the Contractor's employees, subcontractors, suppliers and other persons directly or indirectly employed by his subcontractors, suppliers and of persons for whose acts any of them may be liable and any other persons and organizations performing or furnishing of the Work under a direct or indirect Contract with Contractor. Nothing in the Bid Documents shall create any Contractual relationship between City and any such subcontractor, supplier or other person or organization, nor shall it create any obligation on the part of City to pay or to see to the payment of any moneys due any such subcontractor, supplier or other person or organization except as may otherwise be required by laws and regulations.

All work performed for Contractor by a subcontractor will be pursuant to an appropriate agreement between Contractor and the subcontractor which specifically binds the subcontractor to the applicable terms and conditions of the Bid Documents for the benefit of City.

40.15 Contractor shall obtain and pay for all permits and licenses. Contractor shall pay all governmental charges and inspection fees necessary.

40.16 Within seven (7) calendar days after execution of the Contract and in any event prior to the commencement of any Work hereunder, Contractor shall furnish, in writing to City, the names of persons or entities (including those who are to furnish materials or equipment fabricated to a special design) proposed for each principal portion of the Work. City shall advise Contractor, in writing, of any proposed person or entity to which City has a reasonable objection. Failure of City to reply promptly shall constitute notice of no reasonable objection. Contractor shall not contract with a proposed person or entity to whom City has made a reasonable and timely objection. If City has reasonable objection to a person or entity proposed by Contractor, Contractor shall propose another to whom City has no reasonable objection. Contractor shall not change a subcontractor, person or entity previously selected if City makes reasonable objection to such change.

40.17 Contractor shall be fully responsible to City for all acts and omissions of the Contractor's employees, subcontractors, suppliers and other persons directly or indirectly employed by his subcontractors, suppliers and of persons for whose acts any of them may be liable and any other persons and organizations performing or furnishing of the Work under a direct or indirect contract with Contractor. Nothing in the Contract Documents shall create any contractual relationship between City and any such subcontractor, supplier or other person or organization, nor shall it create any obligation on the part of City to pay or to see to the payment of any moneys due any such subcontractor, supplier or other person or organization except as may otherwise be required by laws and regulations.

40.18 All work performed for Contractor by a subcontractor will be pursuant to an appropriate agreement between Contractor and the subcontractor which specifically binds the subcontractor to the applicable terms and conditions of the Contract Documents for the benefit of City.

41. **RISK OF LOSS; TITLE:** The risk of loss, injury or destruction shall be on Contractor until acceptance of the Work by City. Title to the Work shall pass to City upon acceptance of the Work by City.

42. **USE OF PREMISES:** Contractor shall confine equipment, the storage of materials and equipment and the operations of workers to the project site and areas identified in and permitted by the Bid Documents and shall not unreasonably encumber the premises with equipment or other materials. Contractor shall assume full responsibility for any damage to any such land or area, or to the City or occupant thereof or of any land or areas contiguous thereto, resulting from the performance of the Work. Should any claim be made against City by any such occupant because of the performance of the Work, Contractor shall promptly attempt to settle with such other party by agreement or otherwise resolve the claim. The general indemnification provided elsewhere in this document specifically applies to claims arising out of Contractor's use of the premises.

During the progress of the Work, Contractor shall keep the premises free from accumulation of waste materials, rubbish, and other debris resulting from the Work. At the completion of the Work, Contractor shall remove all waste materials, rubbish and debris from and about the premises, as well as all tools, appliances, equipment and machinery, and surplus materials, and shall leave the site clean and ready for occupancy by City. Contractor shall restore to original condition all property not designated for alteration by the Bid Documents.

Contractor shall not load nor permit any part of any structure to be loaded in any manner that will endanger the structure, nor shall Contractor subject any part of the Work or adjacent property to stresses or pressures that will endanger it.

43. **ACCESS TO WORK:** Contractor shall provide City, City's consultants, representatives and personnel, independent testing laboratories and governmental agencies with jurisdictional interests with access to the Work at reasonable times for their observation, inspection and testing. Contractor shall provide them proper and safe conditions for such access and advise them of Contractor's site safety procedures and programs so that they may comply therewith.

44. **INDEMNIFICATION:** To the extent permitted by Florida law, Contractor agrees to indemnify, defend, save, and hold harmless the City of Margate, their officers and employees, from or on account of all damages, losses, liabilities, including but not limited to reasonable attorneys fees, and costs to the extent caused by the negligence, recklessness or intentional wrongful misconduct of the Contractor and persons employed or utilized by the Contractor in the performance of this agreement. Nothing contained in the foregoing indemnification shall be construed to be a waiver of any immunity or limitation of liability the City may have under the doctrine of sovereign immunity or Section 768.28, Florida Statutes.

45. **SURVIVAL OF OBLIGATIONS:** All representations, indemnifications, warranties and guarantees made in, required by, or given in accordance with this Agreement, as well as all continuing obligations indicated in the Bid Documents, shall survive final payment, completion and acceptance of the Work and termination or completion of the Agreement.

46. **CORRECTION AND REMOVAL OF DEFECTIVE WORK:** If required by City or City's Representative, Contractor shall promptly, as directed, either correct all defective work, whether or not fabricated, installed or completed, or, if the work has been rejected by City or City's Representative, remove it from the site and replace it with non-defective work. Contractor shall bear all direct, indirect and consequential costs of such correction or removal (including but not limited to fees and charges of architects, attorneys and other professionals) made necessary thereby.

47. **PAYMENT TO CONTRACTOR:** Providing all work has been completed and accepted by the City within thirty (30) days of the City's receipt of a properly submitted and correct Application for Payment or Final Invoice, the City shall make payment to the Contractor.

    The Contractor warrants that: (1) title to work, materials and equipment covered by an Application for Payment or Final Invoice will pass to the City either by incorporation in construction or upon receipt of payment by the Contractor, whichever occurs first; (2) work, materials and equipment are free and clear of liens, claims, security interests or encumbrances, hereinafter referred to as "liens"; and (3) no work, materials or equipment will have been acquired by the Contractor, or any other person performing work at the site or furnishing materials or equipment for the project, subject to an agreement under which an interest therein or an encumbrance thereon is retained by the seller or otherwise imposed by the Contractor or such other person.

48. **PAYMENT TO SUBCONTRACTORS:** The City shall have no obligation to pay or to be responsible in any way for payment to a subcontractor of the Contractor except as may otherwise be required by law.

49. **CITY'S RIGHT TO WITHHOLD PAYMENT:** The City may withhold in whole or in part, final payment or any progress payment to such extent as may be necessary to protect itself from loss on account of: defective work not remedied, claims filed or reasonable evidence indicating the probable filing of claims by other parties against the Contractor, failure of the Contractor to make payments to subcontractors or suppliers for materials or labor, damage to another contractor not remedied, liability for liquidated damages has been incurred by the Contractor, reasonable evidence that the work cannot be completed for the unpaid balance of the contract sum, reasonable evidence that the work will not be completed within the contract time or failure to carry out the work in accordance with the Bid Documents.

When the above conditions are removed or resolved or the Contractor provides a surety bond or a consent of surety satisfactory to the City which will protect the City in the amount withheld, payment may be made in whole or in part.

All invoices or requests for payments must indicate the Project Name and Project Number or the Purchase Order Number.

50. **HURRICANE PRECAUTIONS: During such periods of times that are designated by the United States Weather Bureau as a hurricane warning or alert; all construction materials or equipment will be secured against displacement by wind forces; provided that where a full complement of personnel is employed or otherwise in attendance, or engaged for such purposes, formal construction procedures or use of materials or equipment may continue allowing such reasonable time as may be necessary to secure such materials or equipment before winds of hurricane force are anticipated. Construction materials and equipment will be secured by guying and shoring, or removing or tying down loose materials, equipment and construction sheds.**

51. **CHANGES IN THE WORK:**

51.1 City, without invalidating an Agreement, may order additions, deletions or revisions to the Work. Such additions, deletions or revisions shall be authorized by a Written Amendment, Change Order or Work Directive Change.

51.2 All Change Orders which, individually or when cumulatively added to amounts authorized pursuant to prior change orders for this project, increase the cost of the Work to City or which extend the time for completion, must be formally authorized and approved by the City's Commission prior to their issuance and before work may begin.

Notwithstanding the above paragraph, Change Orders which individually or when cumulatively added to amounts authorized, pursuant to prior Change Orders for this project, increase the cost of the Work to the City not in excess of ten percent (10%) or $50,000 (whichever is less) may be approved by signed approval of the City Manager of the City of Margate.

No claim against City for extra work in furtherance of such change order shall be allowed unless prior approval has been obtained.

51.3 Any claim for adjustment in the Contract Price or time shall be based upon written notice delivered by the party making the claim to the other parties and to City or City's Representative not later than three (3) calendar days after the occurrence or event giving rise to the claims and stating the general nature of the claim. No claim for an adjustment in the Contract Price or an extension of

the Contract Time will be valid if not submitted in accordance with this paragraph.

52. **CONCEALED CONDITIONS:** By execution of this agreement, Contractor has satisfied itself as to all conditions necessary to fulfill this contract. No contract adjustments shall be allowed for concealed conditions nor different site conditions than anticipated.

53. **CORRECTION PERIOD:**

53.1 Contractor warrants all material and workmanship for a minimum of one (1) year from date of acceptance by the City. If within one (1) year after the date of final completion or such longer period of time as may be prescribed by laws or regulations or by the terms of any applicable special guarantee required by the Bid Documents, any work is found to be defective, whether observed before or after acceptance by City, Contractor shall promptly, without cost to City and in accordance with CITY'S written instructions, either correct such defective work, or, if it has been rejected by City, remove it from the site and replace it with work that is not defective and satisfactorily correct, remove, and replace any damage to other work or the work of others resulting therefrom. If Contractor does not promptly comply with the terms of such instructions, or in an emergency where delay would cause serious risk of loss or damage, City may have the defective workmanship corrected or the rejected work removed and replaced, and all direct, indirect and consequential costs of such removal and replacement (including but not limited to fees and charges of architects, engineers, attorneys and other professionals) will be paid by Contractor.

53.2 Where defective work (and damage to other work resulting therefrom) has been corrected, removed or replaced under this paragraph, the correction period hereunder with respect to such work will be extended for an additional period of one (1) year after such correction or removal and replacement has been satisfactorily completed.

54. **WORK BY CITY OR CITY'S CONTRACTORS:**

54.1 The City reserves the right to perform work related to, but not part of, the Project and to award separate contracts in connection with other work at the site. If the Contractor claims that delay or additional cost is involved because of such action by the City, the Contractor shall make such claims to the City or City's Representative in writing.

54.2 The Contractor shall afford the City's separate contractors reasonable opportunity for introduction and storage of their materials and equipment for execution of their work. The Contractor shall incorporate and coordinate the

Contractor's work with the work of the City's separate contractors as required by the Bid Documents.

54.3 Costs caused by defective or ill-timed work shall be borne by the party responsible.

55. **CLAIMS FOR DAMAGES:** Should either party to the Agreement suffer injury or damage to person or property because of an act or omission of the other party, the other party's employees or agents, or another for whose acts the other party is legally liable; claim shall be made in writing to the other party within a reasonable time after such injury or damage is or should have been first observed.

56. **SUCCESSORS AND ASSIGNS:** This Agreement shall be binding on successors, assigns, and legal representatives of and persons in privity of contract with the City or Contractor. Neither party shall assign, sublet or transfer an interest in this Agreement without the written consent of the other.

57. **TERMINATION FOR CONVENIENCE OF CITY:** Upon thirty (30) days written notice to Contractor, City may, without cause and without prejudice to any other right or remedy, terminate the agreement for City's convenience whenever City determines that such termination is in the best interests of City. Where the agreement is terminated for the convenience of City, the notice of termination to Contractor must state that the Contract is being terminated for the convenience of City under the termination clause, the effective date of the termination, and the extent of termination. Upon receipt of the notice of termination for convenience, Contractor shall promptly discontinue all work at the time and to the extent indicated on the notice of termination, terminate all outstanding subcontractors and purchase orders to the extent that they relate to the terminated portion of the Contract, and refrain from placing further orders and subcontracts. Contractor shall not be paid on account of loss of anticipated profits/revenues or other economic loss arising out of or resulting from such termination.

58. **COST BREAKDOWN REQUIRED IN THE EVENT OF CHANGE ORDER:** Whenever the cost of any work is to be determined, Contractor will submit in form acceptable to City or City's Representative, an itemized cost breakdown together with supporting data. Whenever a change in the Work is to be based upon mutual acceptance of a lump sum, whether the amount is an addition, credit, or no-change-in-cost, the Contractor shall submit an estimate substantiated by a complete itemized breakdown.

59. **COMPUTATION OF TIME:** When any period of time is referred to in the Bid Documents by days, it will be computed to exclude the first and include the last day of such period. If the last day of any such period falls on a Saturday or Sunday or on a day made a legal holiday by the law of the applicable

jurisdiction, such day will be omitted from the computation. A calendar day of twenty four (24) hours measured from midnight to the next midnight shall constitute a day.

60. **CONTRACTOR INDEPENDENT:** Contractor and its employees, volunteers and agents shall be and remain an independent contractor and not agents or employees of City with respect to all of the acts and services performed by and under the terms of this Agreement. This Agreement shall not in any way be construed to create a partnership, association, or any other kind of joint undertaking or venture between the parties hereto.

61. **RIGHT TO AUDIT:** City reserves the right to audit the records of Contractor relating in any way to the Work to be performed pursuant to this Agreement at any time during the performance and term of the Contract and for a period of three (3) years after completion and acceptance by City. If required by City, Contractor agrees to submit to an audit by an independent certified public accountant selected by City.

    Contractor shall allow City to inspect, examine, and review the records of Contractor, at any and all times during normal business hours during the term of the Contract.

62. **LITIGATION VENUE:** This agreement shall have been deemed to have been executed within the State of Florida. The validity, construction, and effect of this Agreement shall be governed by the laws of the State of Florida. Any claim, objection or dispute arising out of this Agreement shall be litigated only in the courts of the Seventeenth Judicial Circuit in and for Broward County, Florida.

63. **VALIDITY OF CONTRACT:** Should any part, term or provision of this Agreement be by the courts decided to be invalid, illegal, or in conflict with any law of the State, the validity of the remaining portion or provision shall not be affected thereby.

64. **WAIVER OF JURY TRIAL: CITY AND CONTRACTOR HEREBY KNOWINGLY, IRREVOCABLY, VOLUNTARILY, AND INTENTIONALLY WAIVE ANY RIGHT EITHER MAY HAVE TO A TRIAL BY JURY IN RESPECT TO ANY ACTION, PROCEEDING, LAWSUIT OR COUNTERCLAIM BASED UPON THE CONTRACT, ARISING OUT OF, UNDER, OR IN CONNECTION WITH THE CONSTRUCTION OF THE WORK, OR ANY COURSE OF CONDUCT, COURSE OF DEALING, STATEMENTS (WHETHER VERBAL OR WRITTEN) OR THE ACTIONS OR INACTIONS OF ANY PARTY.**

65. **OTHER GOVERNMENTAL AGENCIES:** If Contractor is awarded a contract as a result of this bid proposal, Contractor will, if they have sufficient capacity or quantity available, provide to other governmental agencies, so requesting,

the product or services awarded in accordance with the terms and conditions of the bid proposal and resulting contract. Prices shall be FOB Delivered to the requesting agency.

66. **DISPUTES: NOT WITHSTANDING ANY OTHER PROVISION OF THIS CONTRACT, ANY DISPUTE ARISING UNDER THIS CONTRACT WHICH IS NOT DISPOSED OF BY AGREEMENT SHALL BE DECIDED BY THE CITY MANAGER OF THE CITY OF MARGATE, FLORIDA, WHO SHALL REDUCE HIS DECISION IN WRITING AND FURNISH A COPY THEREOF TO THE CONTRACTOR. THE DECISION OF THE CITY MANAGER OF THE CITY OF MARGATE, FLORIDA AND THOSE PERSONS TO WHOM HE DELEGATES AUTHORITY TO DECIDE DISPUTES, SHALL BE FINAL AND CONCLUSIVE UNLESS DETERMINED BY A COURT OF COMPETENT JURISDICTION TO BE FRAUDULENT, CAPRICIOUS, ARBITRARILY, OR GROSSLY ERRONEOUS AS TO NECESSARILY IMPLY BAD FAITH, OR NOT SUPPORTED BY SUBSTANTIAL EVIDENCE.**

67. **SAMPLES:** Samples of items when requested must be supplied by the bidder free of charge to the City. Each sample must be marked with the bidder's name, manufacturer's brand name and delivered by the bidder within seven (7) calendar days of the request. The City will not be responsible for the return of samples.

68. **TRAINING:** The successful bidder will be required (if requested) to conduct a training course on product bid for selected personnel at no extra cost to the City.

69. **DELIVERY:** All items delivered shall be F.O.B. Destination to a specific City of Margate address and all delivery costs and charges must be included in the bid price.

    All exceptions must be noted. Prior to the delivery of goods or performance of services on City property, the City must be notified. Contractor's personnel and vehicles must be clearly identified with the business name and/or logo, also any applicable license numbers, according to State, County and City ordinances. In addition Contractor's employees shall be uniformly dressed, i.e., t-shirt with name and/or logo, caps, etc.

70. **MATERIAL ACCEPTANCE:** The materials received under this proposal will remain the property of the bidder until accepted to the satisfaction of the City of Margate. In the event the materials supplied to the City are found to be defective or do not conform to specifications, the City reserves the right to return the product to the bidder at the bidder's expense.

71. **EMERGENCY RESPONSE LOCATIONS:** When delivering to emergency response locations (Fire Stations, Police, Utilities, etc.) where utilities, fire, police and emergency repair vehicles are being dispatched, the successful bidder shall take all steps to ensure that free egress and ingress of emergency vehicles are allowed. No delivery trucks shall be left unattended. In the event that a vehicle is to be left unattended, City personnel must be notified and the driver must state where they will be at all times.

72. **ASSIGNMENT:** The bidder shall not transfer or assign the performance required by this bid without the prior written consent of the City of Margate. Any awards issued pursuant to this bid invitation and monies which may become due hereunder are not assignable except with prior written approval of the City.

73. **NON-COLLUSIVE STATEMENT:** By submitting this proposal, the Proposer affirms that this proposal is without previous understanding, agreement, or connection with any person, business, or corporation submitting a proposal for the same materials, supplies, service, or equipment, and that this proposal is in all respects fair, and without collusion or fraud. (Refer to "Non-Collusive Affidavit" form attached.)

74. **CONTRACT RENEWAL:** The City of Margate hereby bids for a one (1) year contract for services or supplies (unless otherwise indicated in the bid specifications), and the contract shall automatically renew for two (2) additional one (1) year extensions, providing both parties agree, providing all terms and conditions and specifications remain the same; providing for availability of funding.

75. **SPECIAL CONDITIONS:** Any and all Special Conditions that may vary from the General Conditions shall have precedence.

76. **WORKING HOURS AND INSPECTIONS:** The City of Margate's working hours are Monday through Thursday 8 AM – 6 PM. Contractor must plan for, and schedule, inspections within the City's working hours.

    Contractor can perform work Monday – Saturday from Dawn to Dusk. Work on Sunday is not permitted unless a special request is made to the City 48 hours in advance. All requests must be approved by the City Manager.

77. **NO WAIVER:** No waiver of any provision, covenant or condition within this agreement, or of the breach of any provision, covenant or condition within this agreement shall be taken to constitute a waiver of any subsequent breach of such provision, covenant or condition.

78. CONTRACTOR DELIVERABLES:

78.1 Engineering Permit – three (3) sets of hard copies plus one (1) PDF copy.
78.2 Engineer's cost estimate or copy of contract
78.3 Building Permit – three (3) sets
78.4 Shop drawings – three (3) sets
78.5 Record Drawings (as built) – two (2) sets of hard copies (one full and one half size) plus one (1) PDF copy
78.6 Record Drawings (as built) – 1 AutoCAD (2010 version, geo referenced)
78.7 Operation and Maintenance Manuals – three hard copies plus one (1) PDF copy.

79. NOTICE TO OWNER/NOTICE OF CONTRACTOR FORMS: All "Notice to Owner/Notice of Contractor" forms, for this bid, must be submitted to the following address:

City of Margate
Parks & Recreation Department
6199 NW 10th Street
Margate, FL 33063
(954) 972-6458

SPECIAL CONDITIONS

BID NO. 2016-009

HOLIDAY SPRINGS BOULEVARD MEDIAN IRRIGATION PROJECT

The City of Margate will accept sealed proposals to provide all materials, labor, equipment, transportation, and permits from qualified firms for a completed project to be known as the Holiday Springs Boulevard Median Irrigation Project. The project site will primarily run along the center median of Holiday Springs Boulevard from Pinewalk Drive South and continue to NW 31st Street.

Scope of Work:

It is the responsibility of each Proposer before submitting a bid to visit the site to become familiar with the local conditions that may affect equipment requirements, cost, progress, or performance of Work and to consider federal, state, and local laws and regulations that may affect cost, progress, or performance of Work.

A minimum requirement of three (3) years progressive experience years in the installation commercial irrigations systems and related components is required.

Contractor's personnel and vehicles must be clearly identified with the Business name and/or logo, also any applicable license numbers, according to State, County, and City ordinances. In addition Contractor's employees shall be uniformly dressed i.e., t-shirt with name and/or logo, caps, etc.

Contractor shall be responsible for initiating, maintaining, and supervising all safety precautions and programs in connection with the work as needed. Maintenance of Traffic (M.O.T.) and all related work safety procedures for construction projects in the immediate vicinity of vehicular traffic shall be the Contractor's responsibility.

Placement and installation of irrigation controller(s), sleeves, conduit and all other necessary connections to new or existing irrigation components shall be performed in accordance with the specifications outlined in the Technical Specifications and with the brand of materials specified.

City permit fees shall not be waived and should be included in your bid proposal. A City permit fee schedule can be obtained from the City's website at www.margatefl.com under the Building Department by clicking on the link provided for permit fees. You may also contact the Building Department directly at 954-970-3004 for information.

All non-technical questions regarding this bid shall be directed to Mr. Spencer L. Shambray, CPPB, Purchasing Supervisor at 954-935-5346.

All technical questions regarding this bid shall be directed to Mr. Michael Jones, CPRP, Director of Parks & Recreation at 954-972-6458.

BID PROPOSAL FORM BID NO. 2016-009

BID TO: **CITY COMMISSION**
CITY OF MARGATE

1. The undersigned bidder proposes and agrees, if this bid is accepted, to enter into an Agreement with the Owner in the form included in the Contract Documents to perform the Work as specified or indicated in said Contract Documents entitled:

HOLIDAY SPRINGS BOULEVARD MEDIAN IRRIGATION PROJECT
BID NO. 2016-009

2. Bidder accepts all of the terms and conditions of the Contract Documents, including without limitation those in the Notice Inviting Bids and Instructions to Bidders, dealing with the disposition of the Bid Security.

3. The bid will remain open for the period stated in the Notice Inviting Bids unless otherwise required by law. Bidder will enter into an Agreement within the time and in the manner required in the Notice Inviting Bids and the Instructions to Bidders, and will furnish the insurance certificates, payment bond, and performance bond required by the Contract Documents.

4. It is the Contractor's responsibility to contact the City @ (954) 935-5346 prior to the bid opening to determine if any addenda have been issued on the project. Bidder has examined copies of all the Contract Documents including the following addenda (receipt of all of which is acknowledged):

Number _____ Date _____
_____ _____
_____ _____

5. Bidder has familiarized himself with the nature and extent of the Contract Documents, Work, site, locality where the Work is to be performed, the legal requirements (federal, state and local laws, ordinances, rules and regulations), and the conditions affecting cost, progress or performance of the Work and has made such independent investigations as Bidder deems necessary.

6. This bid is genuine and not made in the interest of or on behalf of any undisclosed person, firm, or corporation and is not submitted in conformity with any agreement or rules of any group, association, organization, or corporation. Bidder has not directly or indirectly induced or solicited any other bidder to submit a false or sham bid. Bidder has not solicited or induced any person, firm or corporation to refrain from bidding and bidder has not sought by collusion to obtain for itself any advantage over any other bidder or over Owner.

To all the foregoing, and including all Bid Schedule(s) and Information Required of Bidder contained in this Bid Form, said bidder further agrees to complete the Work required under the Contract Documents within the Contract Time stipulated in said Contract Documents, and to accept in full payment thereof the Contract Price based on the Total Bid Price(s) named in the aforementioned Bidding Schedule(s).

NAME OF FIRM:_____

ADDRESS:_____

NAME OF SIGNER_____
(Print or Type)

TITLE OF SIGNER_____

SIGNATURE:_____ DATE:_____

TELEPHONE NO:_____FACSIMILE NO:_____

SCHEDULE OF BID PRICES – BID NO. 2016-009

TO: CITY COMMSSION

CITY OF MARGATE

(Please fill in all blanks and return with your proposal.)

In accordance with your request for proposals and the specifications contained herein, the undersigned proposes the following:

****

DESCRIPTION	TOTAL COST
ALL MATERIALS, LABOR, EQUIPMENT, TOOLS, TRANSPORTATION AND PERMITS FOR THE HOLIDAY SPRINGS BOULEVARD MEDIAN IRRIGATION PROJECT AS SPECIFIED IN THE BID DOCMENTS FOR BID NO. 2016-009	$_____
CONTINGENCY	$ 5,000.00
GRAND TOTAL	$_____

NOTE: City permit fees shall not be waived and should be included in your bid proposal.

****

ALL BIDS MUST BE SIGNED WITH THE VENDOR NAME AND BY AN OFFICER OR EMPLOYEE HAVING THE AUTHORITY TO BIND THE COMPANY OR FIRM BY SIGNATURE.

MATERIAL SAFETY DATA SHEETS ENCLOSED? YES_____NO_____

SPECIFICATION SHEETS/BROCHURES? YES_____NO_____

HAVE YOUR INSURANCE REPRESENTATIVE REVIEW THE SAMPLE INSURANCE CERTIFICATE TO ENSURE COMPLIANCE.

WILL YOUR FIRM ACCEPT PAYMENT VIA A CITY OF MARGATE PROCUREMENT CARD? PLEASE CHECK ONE YES_____NO_____

BIDDER'S GENERAL INFORMATION: BID NO. 2016-009

The bidder shall furnish the following information. Additional sheets shall be attached as required. Failure to complete Item Nos. 1, 3, and 7 (if required) will cause the bid to be non-responsive and may cause its rejection. In any event, no award will be made until all of the Bidder's General Information (i.e., items I through 7 inclusive) is delivered to the City.

(1) Contractor's name and address:

_____

_____

_____

(2) Contractor's telephone number:_____

(3) Contractor's license: Primary classification _____

State License Number: _____

Supplemental classifications held, if any:_____

Name of Licensee, if different from (1) above:_____

_____

_____

(4) Name of person who inspected site of proposed Work for your firm:

Name:_____ Date of Inspection:_____

(5) Name, address, and telephone number of surety company and agent who will provide the required bonds on this contract:_____

_____

_____

(6) ATTACH TO THIS BID the experience resume of the person who will be designated as Supervisor for this project.

(7) ATTACH TO THIS BID a financial statement **(If Required)**, references, and other information, sufficiently comprehensive to allow an appraisal of Contractor's current financial condition. **(Not Required)**

(8) Subcontractors: The bidder further proposes that as part of their submittal there is attached a list of subcontracting firms or businesses who will be awarded subcontracts for portions of the work in the event the bidder is awarded the Contract.

BID BOND

KNOW ALL MEN BY THESE PRESENTS:

That we_____as Principal, and _____ as Surety, are held and firmly bound unto City of Margate, hereinafter called "City" in the sum of ($_____) _____dollars, (not less than 5 percent of the total amount of the bid) for the payment of which sum, well and truly to be made, we bind ourselves, our heirs, executors, administrators, successors, and assigns, jointly and severally, firmly by these presents.

WHEREAS, said Principal has submitted a bid to said City to perform the Work required under the bidding schedule of the City's Contract Documents entitled:

HOLIDAY SPRINGS BOULEVARD MEDIAN IRRIGATION PROJECT
BID NO 2016-009

NOW THEREFORE, if said Principal is awarded a contract by said City and, within the time and in the manner required in the "Notice Inviting Bids" and the "Instructions to Bidders" enters into a written Agreement on the form of the agreement bound with said Contract Documents, furnishes the required certificates of insurance, and furnishes the required Performance Bond, then this obligation shall be null and void, otherwise it shall remain in full force and effect. In the event suit is brought upon this bond by said City and City prevails, said Surety shall pay all costs incurred by said City in such suit, including a reasonable attorney's fee to be fixed by the court.

SIGNED and SEALED, this_____ day of _____, 2016.

_____	_____
(CONTRACTOR)	(SURETY)
By:_____	By:_____
(SIGNATURE)	(SIGNATURE)

STATE OF FLORIDA, COUNTY OF BROWARD:

BEFORE ME PERSONALLY APPEARED THE ABOVE, KNOWN TO ME TO BE THE PERSONS DESCRIBED IN AND WHO EXECUTED THE FOREGOING INSTRUMENT, AND ACKNOWLEDGED TO AND BEFORE ME THAT THEY EXECUTED SAID INSTRUMENT FOR THE PURPOSES THEREIN EXPRESSED.

WITNESS MY HAND AND OFFICIAL SEAL, THIS_____DAY OF _____, 2016

NOTARY PUBLIC:_____

PERFORMANCE BOND

KNOW ALL MEN BY THESE PRESENTS:
That we,_____as Contractor and _____ as Surety, are held and firmly bound unto the **CITY OF MARGATE, FLORIDA** hereinafter called City in the sum of ($_____) _____ dollars, lawful money of the United States, for the payment of which well and truly to be made, we bind ourselves, our heirs, executors, successors and assigns, jointly and severally, firmly by these presents.

WHEREAS, said Contractor has been awarded and is about to enter into the annexed Agreement with said City to perform the Work as specified or indicated in the Bid Documents entitled:

HOLIDAY SPRINGS BOULEVARD MEDIAN IRRIGATION PROJECT
BID NO 2016-009

NOW, THEREFORE, if the said Contractor shall fully and faithfully perform all the requirements of said Bid Documents required to be performed on its part, at the times and in the manner specified herein, then this obligation shall be null and void, otherwise it shall remain in full force and effect.

PROVIDED, that any alterations in the Work to be done or the materials to be furnished, or changes in the time of completion, which may be made pursuant to the terms of said Bid Documents, shall not in any way release said Contractor or said Surety thereunder, nor shall any extensions of time granted under the provisions of said Bid Documents, release either said Contractor or said Surety, and notice of such alterations or extensions of the Agreement is hereby waived by said Surety.

SIGNED and SEALED, this_____ day of_____, 2016.

_____ _____
(CONTRACTOR) (SURETY)

BY:_____ BY:_____
(SIGNATURE) (SIGNATURE)

STATE OF FLORIDA; COUNTY OF BROWARD:

BEFORE ME PERSONALLY APPEARED THE ABOVE, KNOWN TO ME TO BE THE PERSONS DESCRIBED IN AND WHO EXECUTED THE FOREGOING INSTRUMENT, AND ACKNOWLEDGED TO AND BEFORE ME THAT THEY EXECUTED SAID INSTRUMENT FOR THE PURPOSES THEREIN EXPRESSED.

WITNESS MY HAND AND OFFICIAL SEAL, THIS _____DAY OF _____, 2016.

NOTARY PUBLIC:_____

PAYMENT BOND

KNOW ALL MEN BY THESE PRESENTS:
That we_____ as Contractor and___
_____ as Surety, are held and firmly bound unto the **CITY OF MARGATE, FLORIDA,** hereinafter called City, in the sum of ($_____)
_____dollars, for the payment of which sum well and truly to be made, we bind ourselves, our heirs, executors, administrators, successors, and assigns, jointly and severally, firmly by these presents.

WHEREAS, said Contractor has been awarded and is about to enter into the annexed Agreement with said City to perform the Work as specified or indicated in the Contract Documents entitled:

HOLIDAY SPRINGS BOULEVARD MEDIAN IRRIGATION PROJECT
BID NO 2016-009

NOW THEREFORE, if said Contractor, or subcontractor, fails to pay for any materials, equipment, or other supplies, or for rental of same, used in connection with the performance of work contracted to be done, or for amounts due under applicable State law for any work or labor thereon, said Surety will pay for the same in an amount not exceeding the sum specified above, and, in the event suit is brought upon this bond, a reasonable attorney's fee to be fixed by the court. This bond shall inure to the benefit of any persons, companies, or corporations entitled to file claims under applicable State law.

PROVIDED, that any alterations in the Work to be done or the materials to be furnished, or changes in the time of completion, which may be made pursuant to the terms of said Contract Documents, shall not in any way release said Contractor or said Surety thereunder, nor shall any extensions of time granted under the provisions of said Contract Documents release either said Contractor or said Surety, and notice of such alterations or extensions of the Agreement is hereby waived by said Surety.

SIGNED and SEALED, this_____ day of_____, 2016.

_____	_____
(CONTRACTOR)	(SURETY)
By:_____	By:_____
(SIGNATURE)	(SIGNATURE)

STATE OF FLORIDA, COUNTY OF BROWARD:

BEFORE ME PERSONALLY APPEARED THE ABOVE, KNOWN TO ME TO BE THE PERSONS DESCRIBED IN AND WHO EXECUTED THE FOREGOING INSTRUMENT, AND ACKNOWLEDGED TO AND BEFORE ME THAT THEY EXECUTED SAID INSTRUMENT FOR THE PURPOSES THEREIN EXPRESSED.

WITNESS MY HAND AND OFFICIAL SEAL, THIS_____ DAY OF _____, 2016

NOTARY PUBLIC:_____

REFERENCE SHEET – BID NO. 2016-009

In order to receive bid award consideration on the proposed bid, it is a requirement that this sheet be completed and returned with your bid/proposal. This information may be used in determining the bid award for this Project.

BIDDER (COMPANY NAME):_____

ADDRESS:_____

CONTACT PERSON:_____TITLE:_____

TELEPHONE:_____FACSIMILE:_____

NUMBER OF YEARS IN BUSINESS:_____

ADDRESS OF NEAREST FACILITY:_____

LIST THREE (3) COMPANIES OR GOVERNMENTAL AGENCIES WHERE THESE PRODUCTS OR SERVICES HAVE BEEN PROVIDED IN THE LAST YEAR.

1. Company Name:_____

   Address:_____Phone:_____

   Contact Person:_____Title:_____

2. Company Name:_____

   Address:_____Phone:_____

   Contact Person:_____Title:_____

3. Company Name:_____

   Address:_____Phone:_____

   Contact Person:_____Title:_____

COMPLIANCE WITH OCCUPATIONAL SAFETY AND HEALTH ACT

Bidder certifies that all material, equipment, etc. contained in this bid meets all O.S.H.A. requirements. Bidder further certifies that if he/she is the successful bidder, and the material, equipment, etc., delivered is subsequently found to be deficient in any O.S.H.A. requirement in effect on date of delivery, all costs necessary to bring the material, equipment, etc. into compliance with the aforementioned requirements shall be borne by the bidder.

OCCUPATIONAL HEALTH AND SAFETY MATERIAL SAFETY DATA SHEET REQUIRED:

In compliance with Chapter 442, Florida Statutes, any item delivered from a contract resulting from this bid must be accompanied by a MATERIAL SAFETY DATA SHEET (MSDS). The MSDS must include the following information:

A. The chemical name and the common name of the toxic substance.

B. The hazards or other risks in the use of the toxic substances, including:

   1. The potential for fire, explosion, corrosivity and reactivity;

   2. the known acute and chronic health effects of risks from exposure, including the medical conditions which are generally recognized as being aggravated by exposure to the toxic substance; and

   3. the primary routes of entry and symptoms of overexposure.

C. The proper precautions, handling practices, necessary personal protective equipment, and other safety precautions in the use of or exposure to the toxic substances, including appropriate emergency treatment in case of overexposure.

D. The emergency procedure for spills, fire, disposal and first aid.

E. A description in lay terms of the known specific potential health risks posed by the toxic substances intended to alert any person reading this information.

F. The year and month, if available, that the information was compiled and the name, address and emergency telephone number of the manufacturer responsible for preparing the information.

SIGNATURE:_____DATE:_____

CITY OF MARGATE
STATEMENT OF NO BID

IF YOU DO NOT INTEND TO BID ON THIS PROPOSAL, RETURN THIS FORM TO ADDRESS WHERE BID IS TO BE SUBMITTED:

I/We have declined to bid on your proposal No: 2016-009

Bid Description: **HOLIDAY SPRINGS BOULEVARD MEDIAN IRRIGATION PROJECT BID NO 2016-009**

For the following reason:

_____1. Specifications are too tight, i.e. geared toward one brand or manufacturer only. (Explain reason below.)
_____2. Insufficient time to respond to invitation.
_____3. We do not offer this commodity/service or equivalent.
_____4. Our product/service schedule would not permit us to perform.
_____5. Unable to meet specifications.
_____6. Unable to meet bonding requirements.
_____7. Specifications unclear (Explain below).
_____8. Other (Specify below).

REMARKS:_____
_____
_____

Attach additional pages if required.

I/We understand that if the NO BID form is not executed and returned, our name may be deleted from the list of qualified bidders for the City of Margate.

COMPANY NAME:_____

ADDRESS: _____

_____

TELEPHONE NO: _____DATE:_____

SIGNATURE OF BIDDER:_____

DRUG-FREE WORKPLACE PROGRAM FORM BID NO. 2016-009

In accordance with Section 287.087, State of Florida Statutes, preference shall be given to businesses with Drug-free Workplace Programs. Whenever two or more bids which are equal with respect to price, quality and service are received for the procurement of commodities or contractual service, a bid received from a business that certifies that it has implemented a Drug-free Workplace Program shall be given preference in the award process. In the event that none of the tied vendors have a Drug-free Workplace program in effect the City reserves the right to make final Decisions in the City's best interest. In order to have a Drug-free Workplace Program, a business shall:

1. Publish a statement notifying employees that the unlawful manufacture, distribution, dispensing, possession, or use of a controlled substance is prohibited in the workplace and specifying the actions that will be taken against employees for violations of such prohibition.

2. Inform employees about the dangers of drug abuse in the workplace, the business's policy of maintaining a drug-free workplace, any available drug counseling, rehabilitation, and employee assistance programs, and the penalties that may be imposed upon employees for drug abuse violations.

3. Give each employee engaged in providing the commodities or contractual services that are under bid a copy of the statement specified in subsection (1).

4. In the statement specified in subsection (1), notify employees that, as a condition of working on the commodities or contractual services that are under bid, the employee will abide by the terms of the statement and will notify the employer of any conviction of, or plea of guilty or nolo contenders to, any violation of Chapter 893 or of any controlled substance law of the United States of any State, for a violation occurring in the workplace no later than five (5) days after such conviction.

5. Impose a sanction on, or require the satisfactory participation in a drug abuse assistance or rehabilitation program if such is available in the employee's community by any employee who is convicted.

6. Make a good faith effort to continue to maintain a drug-free workplace through implementation. If bidder's company has a Drug-free Workplace Program, so certify below:

AS THE PERSON AUTHORIZED TO SIGN THE STATEMENT, I CERTIFY THAT THIS FIRM COMPLIES FULLY WITH THE ABOVE REQUIREMENTS.

SIGNATURE OF BIDDER: _____ DATE: _____

OFFEROR'S QUALIFICATION STATEMENT BID NO. 2016-009

The undersigned certifies under oath the truth and correctness of all statements and of all answers to questions made hereinafter:

SUBMITTED TO: City of Margate
(Purchasing Division)

ADDRESS: 5790 Margate Blvd.
Margate, FL 33063

CIRCLE ONE

Corporation
Partnership
Individual
Other

SUBMITTED BY:_____

NAME:_____

ADDRESS:_____

TELEPHONE NO.:_____

FACSIMILE NO.:_____

1. State the true, exact, correct, and complete name of the partnership, corporation, trade or fictitious name under which you do business and the address of the place of business.

   The correct name of the Offeror is:_____

   The address of the principal place of business is:

   _____

   _____

2. If Offeror is a corporation, answer the following:

   a. Date of Incorporation:_____

   b. State of Incorporation:_____

c. President's name:_____

d. Vice President's name:_____

e. Secretary's name:_____

f. Treasurer's name:_____

g. Name and address of Resident Agent:_____

_____

_____

3. If Offeror is an individual or a partnership, answer the following:

a. Date of organization:_____

b. Name, address and ownership units of all partners:

_____

_____

_____

c. State whether general or limited partnership:_____

4. If Offeror is other than an individual, corporation or partnership, describe the organization and give the name and address of principals:

_____

_____

5. If Offeror is operating under a fictitious name, submit evidence of compliance with the Florida Fictitious Name Statute.

6. How many years has your organization been in business under its present business name?_____

   a. Under what other former names has your organization operated?

_____

_____

_____

_____

_____

7. Indicate registration, license numbers or certificate numbers for the businesses or professions which are the subject of this Proposal. Please attach certificate of competency and/or state registration.

_____

_____

_____

8. Have you ever failed to complete any work awarded to you? If so, state when, where and why?

_____

_____

_____

_____

9. State the names, telephone numbers and last known addresses of three (3) owners, individuals or representatives of owners with the most knowledge of work which you have performed or goods you have provided, and to which you refer (government owners are preferred as references).

(name)	(address)	(phone number)
(name)	(address)	(phone number)
(name)	(address)	(phone number)

10. List the pertinent experience of the key individuals of your organization (continue on insert sheet, if necessary).

_____

_____

_____

_____

11. State the name(s) of the individual(s) who will have personal supervision of the work:

_____

_____

_____

_____

THE OFFEROR ACKNOWLEDGES AND UNDERSTANDS THAT THE INFORMATION CONTAINED IN RESPONSE TO THIS QUALIFICATION STATEMENT SHALL BE RELIED UPON BY OWNER IN AWARDING THE CONTRACT AND SUCH INFORMATION IS WARRANTED BY OFFEROR TO BE TRUE. THE DISCOVERY OF ANY OMISSION OR MISSTATEMENT THAT MATERIALLY AFFECTS THE OFFEROR'S QUALIFICATIONS TO PERFORM UNDER THE CONTRACT SHALL CAUSE THE OWNER TO REJECT THE PROPOSAL, AND IF AFTER THE AWARD TO CANCEL AND TERMINATE THE AWARD AND/OR CONTRACT.

Signature:_____

State of Florida County of _____

On this the _____ day of _____, 20___, before me, the undersigned Notary Public of the State of Florida, personally appeared _____ and whose name(s) is/are
(Name(s) of individual(s) who appeared before notary)
Subscribed to the within instrument, and he/she/they acknowledge that he/she/they executed it.

_____
NOTARY PUBLIC, STATE OF FLORIDA

NOTARY PUBLIC
SEAL OF OFFICE:

_____
(Name of Notary Public: Print,
Stamp or Type as Commissioned.)

☐ Personally known to me, or
☐ Produced identification:

_____
(Type of Identification Produced
☐ DID take an oath, or ☐ DID NOT take an oath

_____
OPTIONAL INFORMATION:
Type of Document:_____ Number of Pages:___ Number of Signatures Notarized:___

CERTIFICATE OF LIABILITY INSURANCE

DATE (MM/DD/YYYY)

THIS CERTIFICATE IS ISSUED AS A MATTER OF INFORMATION ONLY AND CONFERS NO RIGHTS UPON THE CERTIFICATE HOLDER. THIS CERTIFICATE DOES NOT AFFIRMATIVELY OR NEGATIVELY AMEND, EXTEND OR ALTER THE COVERAGE AFFORDED BY THE POLICIES BELOW. THIS CERTIFICATE OF INSURANCE DOES NOT CONSTITUTE A CONTRACT BETWEEN THE ISSUING INSURER(S), AUTHORIZED REPRESENTATIVE OR PRODUCER, AND THE CERTIFICATE HOLDER.

IMPORTANT: If the certificate holder is an ADDITIONAL INSURED, the policy(ies) must be endorsed. If SUBROGATION IS WAIVED, subject to the terms and conditions of the policy, certain policies may require an endorsement. A statement on this certificate does not confer rights to the certificate holder in lieu of such endorsement(s).

PRODUCER	CONTACT NAME:
	PHONE (A/C, No, Ext): / FAX (A/C, No):
	E-MAIL ADDRESS:
	PRODUCER CUSTOMER ID #:

INSURED	INSURER(S) AFFORDING COVERAGE	NAIC #
	INSURER A :	
	INSURER B :	
	INSURER C :	
	INSURER D :	
	INSURER E :	
	INSURER F :	

COVERAGES **CERTIFICATE NUMBER:** **REVISION NUMBER:**

THIS IS TO CERTIFY THAT THE POLICIES OF INSURANCE LISTED BELOW HAVE BEEN ISSUED TO THE INSURED NAMED ABOVE FOR THE POLICY PERIOD INDICATED. NOTWITHSTANDING ANY REQUIREMENT, TERM OR CONDITION OF ANY CONTRACT OR OTHER DOCUMENT WITH RESPECT TO WHICH THIS CERTIFICATE MAY BE ISSUED OR MAY PERTAIN, THE INSURANCE AFFORDED BY THE POLICIES DESCRIBED HEREIN IS SUBJECT TO ALL THE TERMS, EXCLUSIONS AND CONDITIONS OF SUCH POLICIES. LIMITS SHOWN MAY HAVE BEEN REDUCED BY PAID CLAIMS.

INSR LTR	TYPE OF INSURANCE	ADDL INSR	SUBR WVD	POLICY NUMBER	POLICY EFF (MM/DD/YYYY)	POLICY EXP (MM/DD/YYYY)	LIMITS	
	GENERAL LIABILITY							
	X COMMERCIAL GENERAL LIABILITY						EACH OCCURRENCE	$ 1M
	CLAIMS-MADE / OCCUR						DAMAGE TO RENTED PREMISES (Ea occurrence)	$
							MED EXP (Any one person)	$ 5K
							PERSONAL & ADV INJURY	$ 1M
							GENERAL AGGREGATE	$ 1M
	GEN'L AGGREGATE LIMIT APPLIES PER:						PRODUCTS - COMP/OP AGG	$ 1M
	POLICY / PRO-JECT / LOC							$
	AUTOMOBILE LIABILITY						COMBINED SINGLE LIMIT (Ea accident)	$ 500K
	X ANY AUTO						BODILY INJURY (Per person)	$
	ALL OWNED AUTOS						BODILY INJURY (Per accident)	$
	SCHEDULED AUTOS						PROPERTY DAMAGE (Per accident)	$
	HIRED AUTOS							$
	NON-OWNED AUTOS							$
	UMBRELLA LIAB / OCCUR						EACH OCCURRENCE	$
	EXCESS LIAB / CLAIMS-MADE						AGGREGATE	$
	DEDUCTIBLE							$
	RETENTION $			Note:				$
	WORKERS COMPENSATION AND EMPLOYERS' LIABILITY						X WC STATU-TORY LIMITS / OTH-ER	
	ANY PROPRIETOR/PARTNER/EXECUTIVE OFFICER/MEMBER EXCLUDED? Y/N	N/A		When applicable, the insured shall provide a copy of authorized certificate or			E.L. EACH ACCIDENT	$ 100,000
	(Mandatory in NH) If yes, describe under SPECIAL PROVISIONS below						E.L. DISEASE - EA EMPLOYEE	$ 100,000
							E.L. DISEASE - POLICY LIMIT	$ 300,000
				Workers Compensation Exemption				

DESCRIPTION OF OPERATIONS / LOCATIONS / VEHICLES (Attach ACORD 101, Additional Remarks Schedule, if more space is required)

The City of Margate additional insured for General Liability Only

CERTIFICATE HOLDER	CANCELLATION
The City of Margate (Department Name) 5790 Margate Blvd Margate, Florida 33063	SHOULD ANY OF THE ABOVE DESCRIBED POLICIES BE CANCELLED BEFORE THE EXPIRATION DATE THEREOF, NOTICE WILL BE DELIVERED IN ACCORDANCE WITH THE POLICY PROVISIONS. AUTHORIZED REPRESENTATIVE

© 1988- 2009 ACORD CORPORATION. All rights reserved.

The ACORD name and logo are registered marks of ACORD

ATTACHMENT "A"

PART II
TECHNICAL SPECIFICATIONS

N/A – (See Drawings/Plans)

PART III
DRAWINGS/PLANS

HOLIDAY SPRINGS BOULEVARD MEDIAN IRRIGATION

MARGATE, FLORIDA

FOR: CITY OF MARGATE, FLORIDA

100% CONSTRUCTION DOCUMENTS

2014-07-22 (REVISED 2015-11-06)

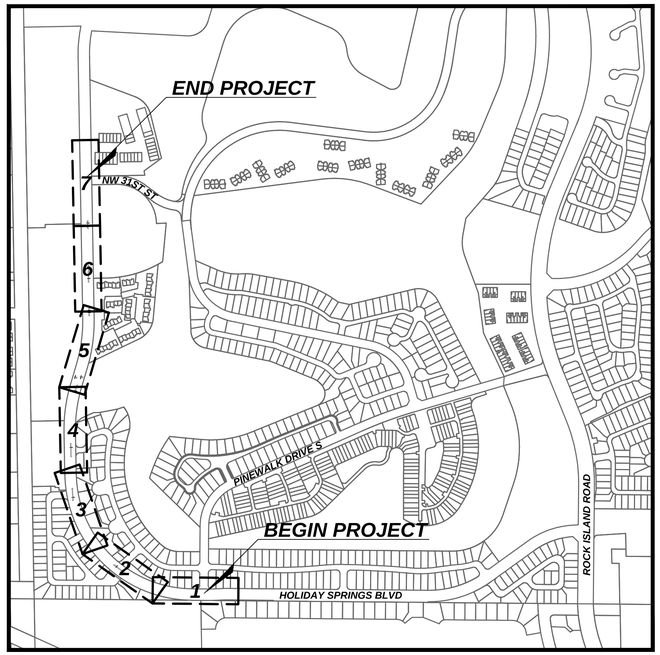

LOCATION MAP

SHEET INDEX

NO.	DRAWING	TITLE
1	L1.00	KEY SHEET
2	L1.01	IRRIGATION PLAN
3	L1.02	IRRIGATION PLAN
4	L1.03	IRRIGATION PLAN
5	L1.04	IRRIGATION PLAN
6	L1.05	IRRIGATION DETAILS
7	L1.06	IRRIGATION SPECIFICATIONS

CITY OF MARGATE, FLORIDA
PARKS AND RECREATION

6199 NW 10th Street
Margate, FL • 33063
(954) 972-6458
www.margatefl.com

CHEN•MOORE
&ASSOCIATES

500 West Cypress Creek Road • Suite 630
Fort Lauderdale, FL • 33309
(954) 730-0707

Fort Lauderdale • Miami • West Palm Beach • North Central Florida • Treasure Coast
www.chenmoore.com

V:\PROJECTS\2014\14-088.004 - HOLIDAY SPRINGS BLVD IRRIGATION\DESIGN\CAD\14-0088.004_IRR.DWG 11/18/15 by SBOMTAK

IRRIGATION LEGEND

SYMBOL	MANUFACTURER/MODEL	RADIUS
	Rain Bird RD-06-S-P30-F-NP 15 Strip Series	4'x15'
	Rain Bird RD-06-S-P30-F-NP 15 Strip Series	4'x30'
	Rain Bird RD-06-S-P30-F-NP HE-VAN-10	10'
	Rain Bird RD-06-S-P30-F-NP HE-VAN-15	15'

SYMBOL	MANUFACTURER/MODEL
	Rain Bird PESBR-PRS-D 1-1/2"
	Nibco T-113 2"
BF	Wilkins 720A 1-1/2"

SYMBOL	MANUFACTURER/MODEL
C	Rain Bird ESP8LXMEF-LXMMPED with 3 ESPLXMSM4
R	Rain Bird ETC-LX with ETM-RG
M	Water Meter 1-1/2"
	Irrigation Lateral Line: PVC Class 200 SDR 21
	Irrigation Mainline: PVC Class 200 SDR 21
	Pipe Sleeve: PVC Schedule 40

Valve Callout
- Valve Number
- Valve Flow
- Valve Size

GENERAL NOTES

1. SITE BASE INFORMATION AND UTILITY LOCATIONS GENERATED FROM PUBLICLY AVAILABLE AERIAL PHOTOGRAPHY AND GIS DATA. CONTRACTOR TO VERITY LOCATION OF ALL EXISTING UTILITIES, TREES, AND SITE FEATURES PRIOR TO CONSTRUCTION.
2. IT SHALL BE THE CONTRACTOR'S SOLE RESPONSIBILITY TO TAKE THE NECESSARY PRECAUTIONS TO ENSURE PROPER SAFETY AND WORKMANSHIP WHEN WORKING IN THE VICINITY OF EXISTING UTILITY LINES.
3. CONTRACTOR SHALL BE RESPONSIBLE TO COORDINATE WITH FPL ON ANY WORK IN THE VICINITY OF OVERHEAD OR UNDERGROUND POWER LINES.
4. CONTRACTOR SHALL VERIFY PROPER CLEARANCE BELOW EXISTING OVERHEAD POWER LINES PRIOR TO WORKING WITHIN THE VICINITY THE POWER LINES.
5. MAINLINE LOCATION, WHERE SHOWN, IS FOR GRAPHIC CLARITY PURPOSES ONLY. INSTALL AT THE BACK OF CURB, FRONT OF WALK, BACK OF WALK, OR ADJACENT TO OTHER HARDSCAPES TO FACILITATE FUTURE LOCATION AND TO PROTECT FROM DAMAGE. ENSURE MAINLINE IS INSTALLED ACCORDING TO THE IRRIGATION SPECIFICATIONS AND DETAILS.
5. IF IT IS NECESSARY TO HAVE PIPING UNDER HARDSCAPE ITEMS, SUCH AS ROADS, WALKS AND PATIOS, THE PIPES MUST BE SLEEVED USING SCH 40 PVC WITH THE SLEEVE DIAMETER BEING AT LEAST TWICE THE SIZE OF THE PIPE IT IS CARRYING.
5. CONTRACTOR SHALL BE RESPONSIBLE FOR REPLACING TURF AREAS AS NECESSARY THAT HAS BEEN DAMAGED BY IRRIGATION SYSTEM INSTALLATION.
6. CONTRACTOR SHALL REPAIR AND REPLACE PAVEMENT REMOVED OR DAMAGED FOR IRRIGATION SLEEVING, REFER TO DETAIL SD-27, SHEET L1.05.
7. ALL SYSTEM COMPONENTS TO COMPLY WITH RECLAIMED WATER IDENTIFICATION REQUIREMENTS FOR FUTURE CONNECTION. PROPERLY MARK/IDENTIFY ALL PIPING, VALVES, SPRINKLER HEADS, VALVE BOXES, CONTROLLERS, AND IRRIGATED AREAS. COLOR CODE USING 'PANTONE PURPLE', AS REQUIRED.

811 KNOW WHAT'S BELOW ALWAYS CALL 811 BEFORE YOU DIG
It's fast. It's free. It's the law.
www.callsunshine.com

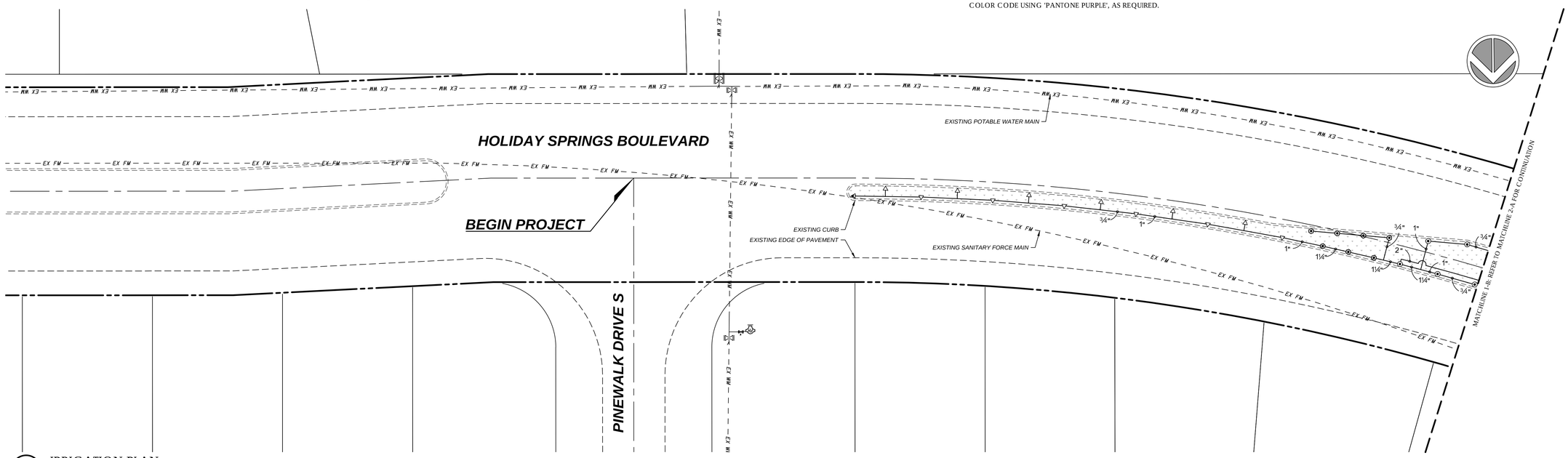

1 IRRIGATION PLAN
1" = 20'-0"

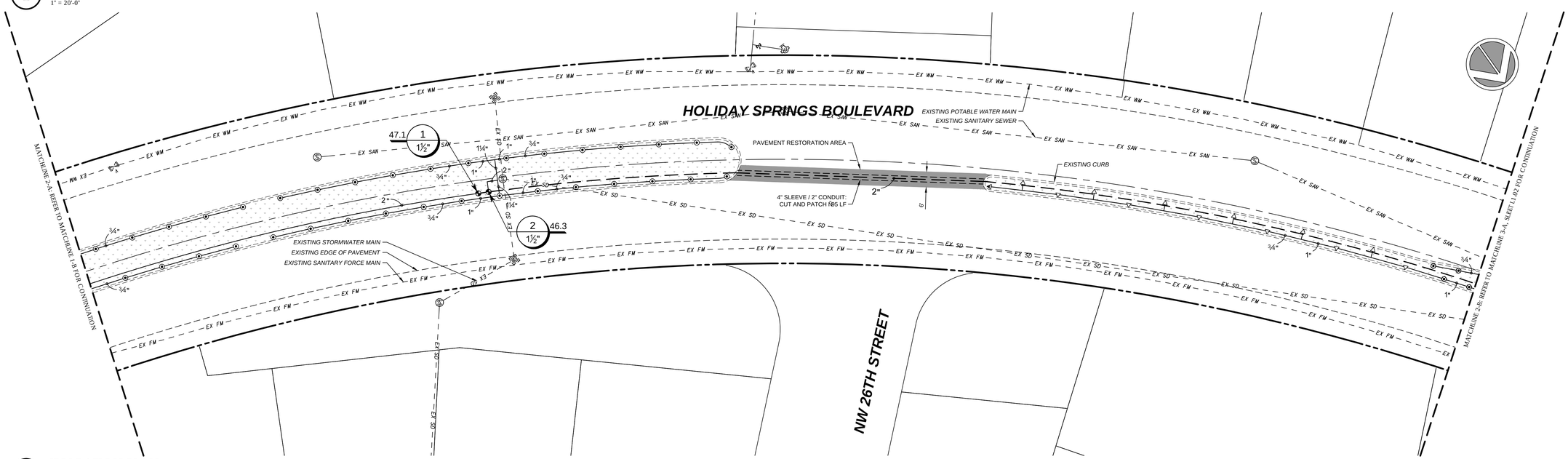

2 IRRIGATION PLAN
1" = 20'-0"

CHEN•MOORE &ASSOCIATES
Civil & Environmental Engineers, Landscape Architects and Planners
Your trusted Advisor for Infrastructure and Planning Needs for 25 Years
500 West Cypress Creek Road • Suite 630
Fort Lauderdale, FL • 33309
(954) 730-0707
www.chenmoore.com
Fort Lauderdale • Miami • West Palm Beach • North Central Florida • Treasure Coast
CERTIFICATES OF AUTHORIZATION
EB0004593 LC26000425

CLIENT:
CITY OF MARGATE, FLORIDA
PARKS AND RECREATION
6199 NW 10th Street
Margate, FL • 33063
(954) 972-6458
www.margatefl.com

PROJECT INFO:
HOLIDAY SPRINGS BOULEVARD MEDIAN IRRIGATION
MARGATE, FLORIDA
FOR: CITY OF MARGATE, FLORIDA

SEAL:

CRISTOBAL BETANCOURT, RLA
FLORIDA REG.# 6666941

NO.	DATE	REVISION
1	11/6/15	GIS/PLAN UPDATES PER CITY COMMENTS

MSB	MSB	CAB
DES.	DWN.	CHK.

100% CONSTRUCTION DOCUMENTS
088.004 | 2014-07-22
IRRIGATION PLAN
L1.01

V:\ PROJECTS \ 2014 \ 14-088.004 - HOLIDAY SPRINGS BLVD IRRIGATION \ DESIGN \ CAD \ 14-0088.004_IRR.DWG 11/18/15 by SBORTAK

IRRIGATION LEGEND

SYMBOL	MANUFACTURER/MODEL	RADIUS
	Rain Bird RD-06-S-P30-F-NP 15 Strip Series	4'x15'
	Rain Bird RD-06-S-P30-F-NP 15 Strip Series	4'x30'
	Rain Bird RD-06-S-P30-F-NP HE-VAN-10	10'
	Rain Bird RD-06-S-P30-F-NP HE-VAN-15	15'

SYMBOL	MANUFACTURER/MODEL
	Rain Bird PESBR-PRS-D 1-1/2"
	Nibco T-113 2"
BF	Wilkins 720A 1-1/2"

SYMBOL	MANUFACTURER/MODEL
C	Rain Bird ESP8LXMEF-LXMMPED with 3 ESPLXMSM4
R	Rain Bird ETC-LX with ETM-RG
M	Water Meter 1-1/2"
	Irrigation Lateral Line: PVC Class 200 SDR 21
	Irrigation Mainline: PVC Class 200 SDR 21
	Pipe Sleeve: PVC Schedule 40

Valve Callout
- Valve Number
- Valve Flow
- Valve Size

GENERAL NOTES

1. SITE BASE INFORMATION AND UTILITY LOCATIONS GENERATED FROM PUBLICLY AVAILABLE AERIAL PHOTOGRAPHY AND GIS DATA. CONTRACTOR TO VERITY LOCATION OF ALL EXISTING UTILITIES, TREES, AND SITE FEATURES PRIOR TO CONSTRUCTION.
2. IT SHALL BE THE CONTRACTOR'S SOLE RESPONSIBILITY TO TAKE THE NECESSARY PRECAUTIONS TO ENSURE PROPER SAFETY AND WORKMANSHIP WHEN WORKING IN THE VICINITY OF EXISTING UTILITY LINES.
3. CONTRACTOR SHALL BE RESPONSIBLE TO COORDINATE WITH FPL ON ANY WORK IN THE VICINITY OF OVERHEAD OR UNDERGROUND POWER LINES.
4. CONTRACTOR SHALL VERIFY PROPER CLEARANCE BELOW EXISTING OVERHEAD POWER LINES PRIOR TO WORKING WITHIN THE VICINITY THE POWER LINES.
5. MAINLINE LOCATION, WHERE SHOWN, IS FOR GRAPHIC CLARITY PURPOSES ONLY. INSTALL AT THE BACK OF CURB, FRONT OF WALK, BACK OF WALK, OR ADJACENT TO OTHER HARDSCAPES TO FACILITATE FUTURE LOCATION AND TO PROTECT FROM DAMAGE. ENSURE MAINLINE IS INSTALLED ACCORDING TO THE IRRIGATION SPECIFICATIONS AND DETAILS.
5. IF IT IS NECESSARY TO HAVE PIPING UNDER HARDSCAPE ITEMS, SUCH AS ROADS, WALKS AND PATIOS, THE PIPES MUST BE SLEEVED USING SCH 40 PVC WITH THE SLEEVE DIAMETER BEING AT LEAST TWICE THE SIZE OF THE PIPE IT IS CARRYING.
5. CONTRACTOR SHALL BE RESPONSIBLE FOR REPLACING TURF AREAS AS NECESSARY THAT HAS BEEN DAMAGED BY IRRIGATION SYSTEM INSTALLATION.
6. CONTRACTOR SHALL REPAIR AND REPLACE PAVEMENT REMOVED OR DAMAGED FOR IRRIGATION SLEEVING, REFER TO DETAIL SD-27, SHEET L1.05.
7. ALL SYSTEM COMPONENTS TO COMPLY WITH RECLAIMED WATER IDENTIFICATION REQUIREMENTS FOR FUTURE CONNECTION. PROPERLY MARK/IDENTIFY ALL PIPING, VALVES, SPRINKLER HEADS, VALVE BOXES, CONTROLLERS, AND IRRIGATED AREAS. COLOR CODE USING 'PANTONE PURPLE', AS REQUIRED.

811 KNOW WHAT'S BELOW ALWAYS CALL 811 BEFORE YOU DIG
It's fast. It's free. It's the law.
www.callsunshine.com

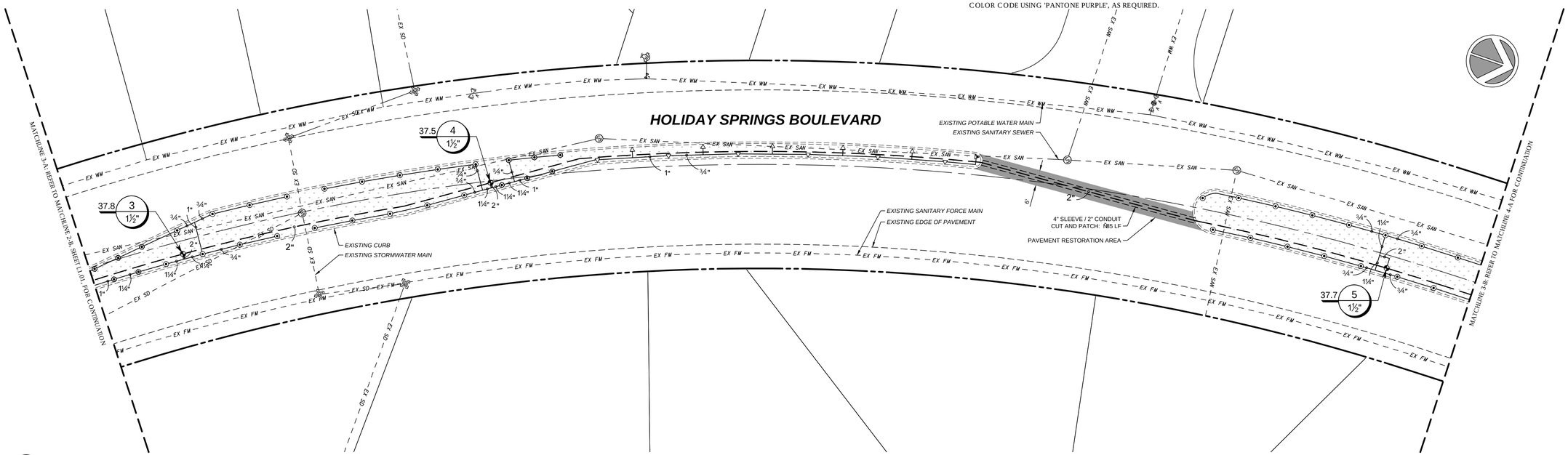

3 IRRIGATION PLAN
1" = 20'-0"

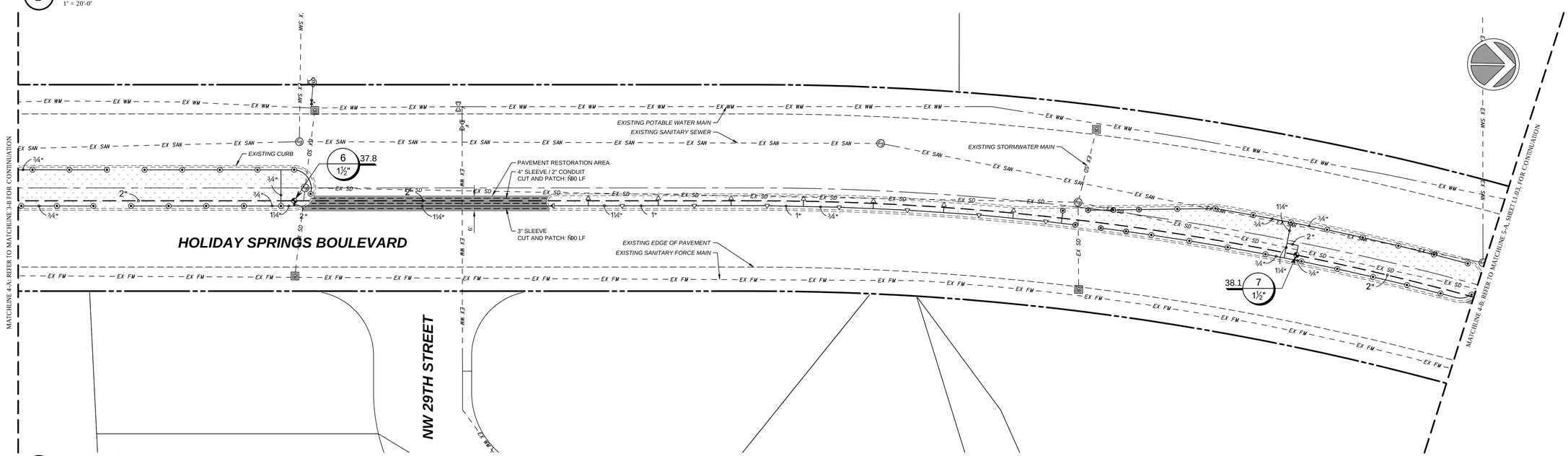

4 IRRIGATION PLAN
1" = 20'-0"

CHEN•MOORE &ASSOCIATES
Civil & Environmental Engineers, Landscape Architects and Planners
Your trusted Advisor for Infrastructure and Planning Needs for 25 Years
500 West Cypress Creek Road • Suite 630
Fort Lauderdale, FL • 33309
(954) 730-0707
www.chenmoore.com
Fort Lauderdale • Miami • West Palm Beach • North Central Florida • Treasure Coast
CERTIFICATES OF AUTHORIZATION
EB0004593 LC26000425

CLIENT:
CITY OF MARGATE, FLORIDA
PARKS AND RECREATION
6199 NW 10th Street
Margate, FL • 33063
(954) 972-6458
www.margatefl.com

PROJECT INFO:
HOLIDAY SPRINGS BOULEVARD MEDIAN IRRIGATION
MARGATE, FLORIDA
FOR: CITY OF MARGATE, FLORIDA

SEAL:

CRISTOBAL BETANCOURT, RLA
FLORIDA REG. # 6666941

NO.	DATE	REVISION
1	11/6/15	GIS/PLAN UPDATES PER CITY COMMENTS.

DES.	DWN.	CHK.
MSB	MSB	CAB

100% CONSTRUCTION DOCUMENTS
088.004 | 2014-07-22
IRRIGATION PLAN
L1.02

V:\ PROJECTS \ 2014 \ 14-088.004 - HOLIDAY SPRINGS BLVD IRRIGATION \ DESIGN \ CAD \ 14-0088.004_IRR.DWG 11/18/15 by SHORTAK

IRRIGATION LEGEND

SYMBOL	MANUFACTURER/MODEL	RADIUS
	Rain Bird RD-06-S-P30-F-NP 15 Strip Series	4'x15'
	Rain Bird RD-06-S-P30-F-NP 15 Strip Series	4'x30'
	Rain Bird RD-06-S-P30-F-NP HE-VAN-10	10'
	Rain Bird RD-06-S-P30-F-NP HE-VAN-15	15'

SYMBOL	MANUFACTURER/MODEL
	Rain Bird PESBR-PRS-D 1-1/2"
	Nibco T-113 2"
BF	Wilkins 720A 1-1/2"

SYMBOL	MANUFACTURER/MODEL
C	Rain Bird ESP8LXMEF-LXMMPED with 3 ESPLXMSM4
R	Rain Bird ETC-LX with ETM-RG
M	Water Meter 1-1/2"
	Irrigation Lateral Line: PVC Class 200 SDR 21
	Irrigation Mainline: PVC Class 200 SDR 21
	Pipe Sleeve: PVC Schedule 40

Valve Callout
- Valve Number
- Valve Flow
- Valve Size

GENERAL NOTES

1. SITE BASE INFORMATION AND UTILITY LOCATIONS GENERATED FROM PUBLICLY AVAILABLE AERIAL PHOTOGRAPHY AND GIS DATA. CONTRACTOR TO VERITY LOCATION OF ALL EXISTING UTILITIES, TREES, AND SITE FEATURES PRIOR TO CONSTRUCTION.
2. IT SHALL BE THE CONTRACTOR'S SOLE RESPONSIBILITY TO TAKE THE NECESSARY PRECAUTIONS TO ENSURE PROPER SAFETY AND WORKMANSHIP WHEN WORKING IN THE VICINITY OF EXISTING UTILITY LINES.
3. CONTRACTOR SHALL BE RESPONSIBLE TO COORDINATE WITH FPL ON ANY WORK IN THE VICINITY OF OVERHEAD OR UNDERGROUND POWER LINES.
4. CONTRACTOR SHALL VERIFY PROPER CLEARANCE BELOW EXISTING OVERHEAD POWER LINES PRIOR TO WORKING WITHIN THE VICINITY THE POWER LINES.
5. MAINLINE LOCATION, WHERE SHOWN, IS FOR GRAPHIC CLARITY PURPOSES ONLY. INSTALL AT THE BACK OF CURB, FRONT OF WALK, BACK OF WALK, OR ADJACENT TO OTHER HARDSCAPES TO FACILITATE FUTURE LOCATION AND TO PROTECT FROM DAMAGE. ENSURE MAINLINE IS INSTALLED ACCORDING TO THE IRRIGATION SPECIFICATIONS AND DETAILS.
5. IF IT IS NECESSARY TO HAVE PIPING UNDER HARDSCAPE ITEMS, SUCH AS ROADS, WALKS AND PATIOS, THE PIPES MUST BE SLEEVED USING SCH 40 PVC WITH THE SLEEVE DIAMETER BEING AT LEAST TWICE THE SIZE OF THE PIPE IT IS CARRYING.
5. CONTRACTOR SHALL BE RESPONSIBLE FOR REPLACING TURF AREAS AS NECESSARY THAT HAS BEEN DAMAGED BY IRRIGATION SYSTEM INSTALLATION.
6. CONTRACTOR SHALL REPAIR AND REPLACE PAVEMENT REMOVED OR DAMAGED FOR IRRIGATION SLEEVING, REFER TO DETAIL SD-27, SHEET L1.05.
7. ALL SYSTEM COMPONENTS TO COMPLY WITH RECLAIMED WATER IDENTIFICATION REQUIREMENTS FOR FUTURE CONNECTION. PROPERLY MARK/IDENTIFY ALL PIPING, VALVES, SPRINKLER HEADS, VALVE BOXES, CONTROLLERS, AND IRRIGATED AREAS. COLOR CODE USING 'PANTONE PURPLE', AS REQUIRED.

811 KNOW WHAT'S BELOW ALWAYS CALL 811 BEFORE YOU DIG
It's fast. It's free. It's the law.
www.callsunshine.com

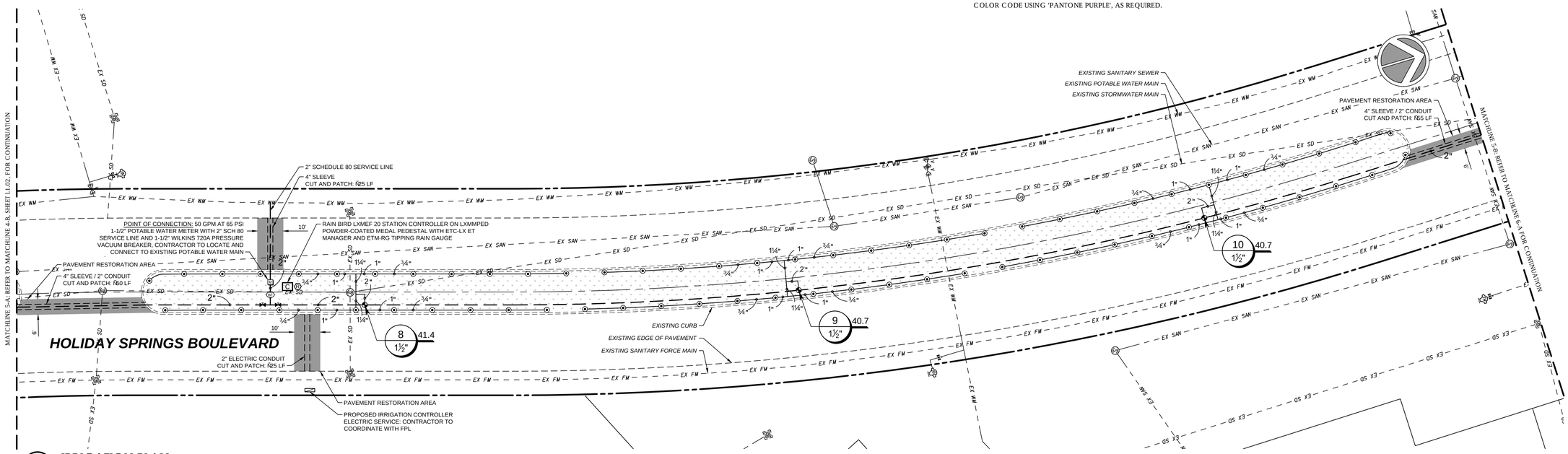

5 IRRIGATION PLAN
1" = 20'-0"

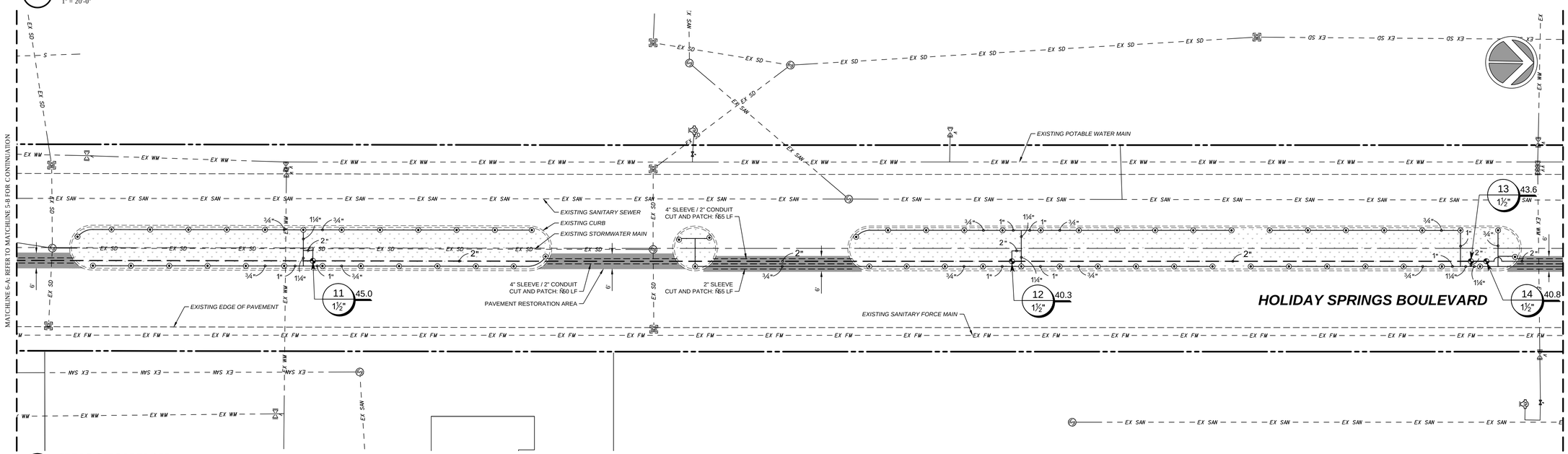

6 IRRIGATION PLAN
1" = 20'-0"

Fort Lauderdale • Miami • West Palm Beach • North Central Florida • Treasure Coast
CHEN•MOORE &ASSOCIATES
Civil & Environmental Engineers, Landscape Architects and Planners
Your trusted Advisor for Infrastructure and Planning Needs for 25 Years
500 West Cypress Creek Road • Suite 630
Fort Lauderdale, FL • 33309
(954) 730-0707
www.chenmoore.com
CERTIFICATES OF AUTHORIZATION
EB0004593 LC26000425

CLIENT:
CITY OF MARGATE, FLORIDA
PARKS AND RECREATION
6199 NW 10th Street
Margate, FL • 33063
(954) 972-6458
www.margatefl.com

PROJECT INFO:
HOLIDAY SPRINGS BOULEVARD MEDIAN IRRIGATION
MARGATE, FLORIDA
FOR: CITY OF MARGATE, FLORIDA

SEAL:

CRISTOBAL BETANCOURT, RLA
FLORIDA REG. # 6666941

NO.	DATE	REVISION
1	11/6/15	GIS/PLAN UPDATES PER CITY COMMENTS

MSB	MSB	CAB
DES.	DWN.	CHK.

100% CONSTRUCTION DOCUMENTS
088.004 | 2014-07-22
IRRIGATION PLAN
L1.03

V:\PROJECTS\2014\14-088.004 - HOLIDAY SPRINGS BLVD IRRIGATION DESIGN\CAD\14-088.004_IRR.DWG 11/18/15 by SBORTAK

IRRIGATION LEGEND

SYMBOL	MANUFACTURER/MODEL	RADIUS
	Rain Bird RD-06-S-P30-F-NP 15 Strip Series	4'x15'
	Rain Bird RD-06-S-P30-F-NP 15 Strip Series	4'x30'
	Rain Bird RD-06-S-P30-F-NP HE-VAN-10	10'
	Rain Bird RD-06-S-P30-F-NP HE-VAN-15	15'

SYMBOL	MANUFACTURER/MODEL
	Rain Bird PESBR-PRS-D 1-1/2"
	Nibco T-113 2"
BF	Wilkins 720A 1-1/2"

SYMBOL	MANUFACTURER/MODEL
C	Rain Bird ESP8LXMEF-LXMMPED with 3 ESPLXMSM4
R	Rain Bird ETC-LX with ETM-RG
M	Water Meter 1-1/2"
	Irrigation Lateral Line: PVC Class 200 SDR 21
	Irrigation Mainline: PVC Class 200 SDR 21
	Pipe Sleeve: PVC Schedule 40

Valve Callout

Valve Number
Valve Flow
Valve Size

GENERAL NOTES

1. SITE BASE INFORMATION AND UTILITY LOCATIONS GENERATED FROM PUBLICLY AVAILABLE AERIAL PHOTOGRAPHY AND GIS DATA. CONTRACTOR TO VERITY LOCATION OF ALL EXISTING UTILITIES, TREES, AND SITE FEATURES PRIOR TO CONSTRUCTION.
2. IT SHALL BE THE CONTRACTOR'S SOLE RESPONSIBILITY TO TAKE THE NECESSARY PRECAUTIONS TO ENSURE PROPER SAFETY AND WORKMANSHIP WHEN WORKING IN THE VICINITY OF EXISTING UTILITY LINES.
3. CONTRACTOR SHALL BE RESPONSIBLE TO COORDINATE WITH FPL ON ANY WORK IN THE VICINITY OF OVERHEAD OR UNDERGROUND POWER LINES.
4. CONTRACTOR SHALL VERIFY PROPER CLEARANCE BELOW EXISTING OVERHEAD POWER LINES PRIOR TO WORKING WITHIN THE VICINITY THE POWER LINES.
5. MAINLINE LOCATION, WHERE SHOWN, IS FOR GRAPHIC CLARITY PURPOSES ONLY. INSTALL AT THE BACK OF CURB, FRONT OF WALK, BACK OF WALK, OR ADJACENT TO OTHER HARDSCAPES TO FACILITATE FUTURE LOCATION AND TO PROTECT FROM DAMAGE. ENSURE MAINLINE IS INSTALLED ACCORDING TO THE IRRIGATION SPECIFICATIONS AND DETAILS.
5. IF IT IS NECESSARY TO HAVE PIPING UNDER HARDSCAPE ITEMS, SUCH AS ROADS, WALKS AND PATIOS, THE PIPES MUST BE SLEEVED USING SCH 40 PVC WITH THE SLEEVE DIAMETER BEING AT LEAST TWICE THE SIZE OF THE PIPE IT IS CARRYING.
5. CONTRACTOR SHALL BE RESPONSIBLE FOR REPLACING TURF AREAS AS NECESSARY THAT HAS BEEN DAMAGED BY IRRIGATION SYSTEM INSTALLATION.
6. CONTRACTOR SHALL REPAIR AND REPLACE PAVEMENT REMOVED OR DAMAGED FOR IRRIGATION SLEEVING, REFER TO DETAIL SD-27, SHEET L1.05.
7. ALL SYSTEM COMPONENTS TO COMPLY WITH RECLAIMED WATER IDENTIFICATION REQUIREMENTS FOR FUTURE CONNECTION. PROPERLY MARK/IDENTIFY ALL PIPING, VALVES, SPRINKLER HEADS, VALVE BOXES, CONTROLLERS, AND IRRIGATED AREAS. COLOR CODE USING 'PANTONE PURPLE', AS REQUIRED.

811 KNOW WHAT'S BELOW ALWAYS CALL 811 BEFORE YOU DIG
It's fast. It's free. It's the law.
www.callsunshine.com

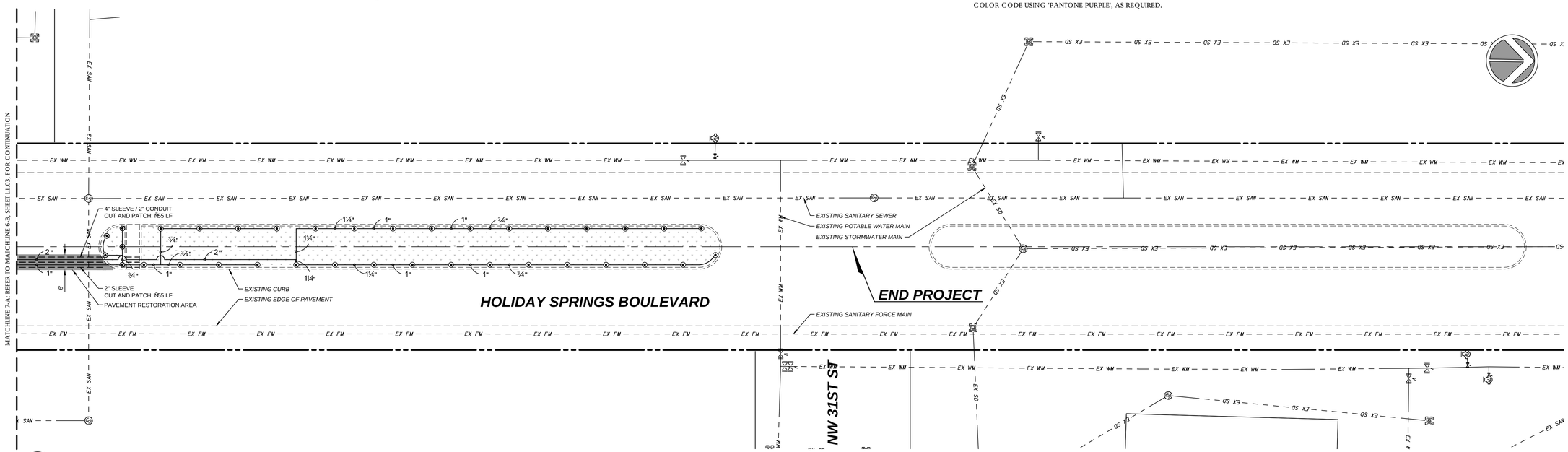

7 IRRIGATION PLAN
1" = 20'-0"

CHEN•MOORE &ASSOCIATES
Civil & Environmental Engineers, Landscape Architects and Planners
Your trusted Advisor for Infrastructure and Planning Needs for 25 Years
500 West Cypress Creek Road • Suite 630
Fort Lauderdale, FL • 33309
(954) 730-0707
www.chenmoore.com
Fort Lauderdale • Miami • West Palm Beach • North Central Florida • Treasure Coast
CERTIFICATES OF AUTHORIZATION
EB0004593 LC26000425

CLIENT:
CITY OF MARGATE, FLORIDA
PARKS AND RECREATION
6199 NW 10th Street
Margate, FL • 33063
(954) 972-6458
www.margatefl.com

PROJECT INFO:
HOLIDAY SPRINGS BOULEVARD MEDIAN IRRIGATION
MARGATE, FLORIDA
FOR: CITY OF MARGATE, FLORIDA

SEAL:

CRISTOBAL BETANCOURT, RLA
FLORIDA REG. # 6666941

NO.	DATE	REVISION
1	11/6/15	GIS/PLAN UPDATES PER CITY COMMENTS

MSB	MSB	CAB
DES.	DWN.	CHK.

100% CONSTRUCTION DOCUMENTS
088.004 | 2014-07-22
IRRIGATION PLAN
L1.04

V:\PROJECTS\2014\14-0088.004 - HOLIDAY SPRINGS BLVD IRRIGATION\DESIGN\CAD\14-0088.004_IRR.DWG 11/18/15 by SHORTAK

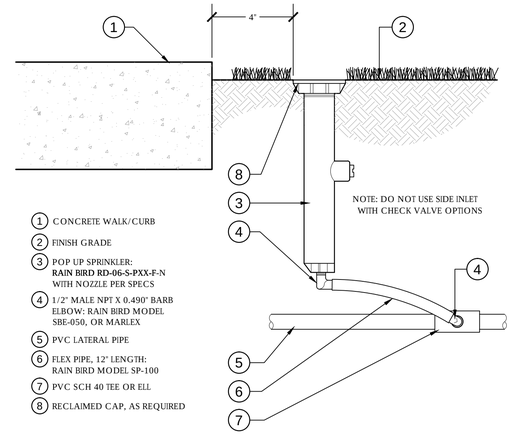

1. CONCRETE WALK/CURB
2. FINISH GRADE
3. POP UP SPRINKLER: **RAIN BIRD RD-06-S-PXX-F-N** WITH NOZZLE PER SPEC'S
4. 1/2" MALE NPT X 0.490" BARB ELBOW: RAIN BIRD MODEL SBE-050, OR MARLEX
5. PVC LATERAL PIPE
6. FLEX PIPE, 12" LENGTH: RAIN BIRD MODEL SP-100
7. PVC SCH 40 TEE OR ELL
8. RECLAIMED CAP, AS REQUIRED

1 6" POP-UP SPRAY

3" = 1'-0" 328403.13-03

1. 30-INCH LINEAR LENGTH OF WIRE, COILED
2. WATERPROOF CONNECTION (1 OF 2)
3. ZONE ID TAG
4. REMOTE CONTROL VALVE WITH PRESSURE REGULATOR
5. STANDARD VALVE BOX
6. PVC SCH 80 NIPPLE
7. PVC SCH 40 ELL
8. PVC SCH 40 TEE
9. PVC MAINLINE PIPE
10. PVC SCH 40 ADAPTER
11. 1/2" WIRE CLOTH GOPHER SCREEN WRAP ALL SIDES
12. BRICK (1 OF 4)
13. 6-INCH MINIMUM DEPTH 3/4" WASHED GRAVEL

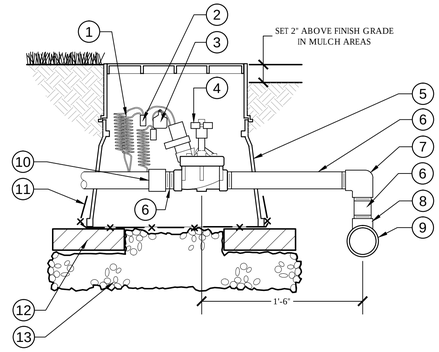

2 PRESSURE REGULATING REMOTE CONTROL VALVE

1 1/2" = 1'-0" 328406.13-11

1. FINISH GRADE
2. VALVE BOX
3. WIRE SCREEN CLOTH
4. BRICK (1 OF 4)
5. 6" DEPTH OF 3/4" MINUS GRAVEL
6. 3" ADS. SIZE AS REQUIRED
7. NIBCO T-113 BRASS GATE VALVE
8. PVC COUPLER AND SCHEDULE 80 TOE NIPPLE (EACH SIDE)

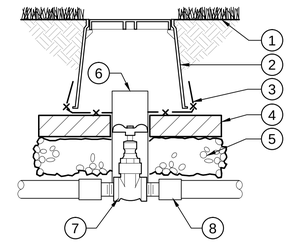

3 ISOLATION VALVE

1 1/2" = 1'-0" 328406.33-11

1. PRESSURE VACUUM BREAKER ASSEMBLY: WILKINS 720A OR EQUAL
2. GALVANIZED RISERS, LENGTH AS REQUIRED
3. GALVANIZED UNION
4. GALVANIZED ELL FITTINGS. PROVIDE THRUST BLOCK OR RESTRAINTS AS REQUIRED.
5. PVC SERVICE LINE PER SPECIFICATIONS
6. PVC COUPLER AND SCHEDULE 80 TOE NIPPLE (EACH SIDE)
7. PVC IRRIGATION MAINLINE PER SPECIFICATIONS
8. FINISH GRADE

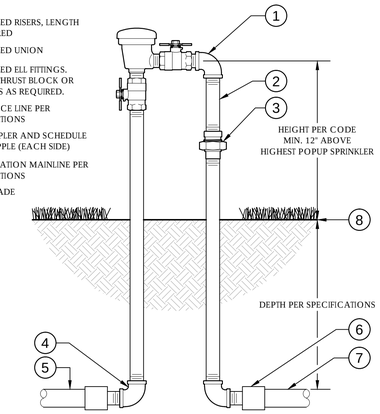

4 PRESSURE VACUUM BREAKER ASSEMBLY

1 1/2" = 1'-0" 328409.43-04

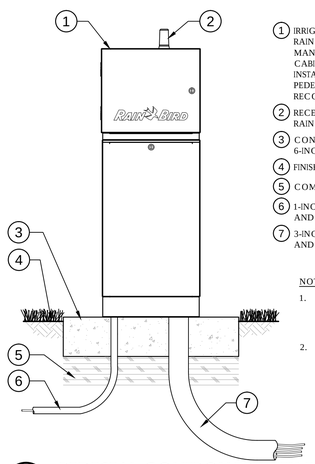

1. IRRIGATION CONTROLLER: RAIN BIRD ESP-LXME CONTROLLER WITH ET MANAGER CARTRIDGE IN LXMM METAL CABINET AND LXMMPED METAL PEDESTAL. INSTALL CONTROLLER, CABINET AND PEDESTAL PER MANUFACTURER'S RECOMMENDATIONS.
2. RECEIVER: RAIN BIRD ETCLX ET MANAGER CARTRIGE
3. CONCRETE PAD: 6-INCH MINIMUM THICKNESS
4. FINISH GRADE
5. COMPACTED SUBGRADE
6. 1-INCH SCH 40 PVC CONDUIT, FITTINGS AND SWEEP ELL FOR POWER SUPPLY
7. 3-INCH SCH 40 PVC CONDUIT, FITTINGS AND SWEEP ELL FOR STATION WIRES

NOTES:

1. PROVIDE PROPER GROUNDING COMPONENTS TO ACHIEVE GROUND RESISTANCE OF 10 OHMS OR LESS.
2. CONTRACTOR SHALL CONFIGURE ET MANAGER AND SCHEDULING SOFTWARE.

5 PEDESTAL CONTROLLER WITH ET MANAGER

3/4" = 1'-0" 32 8409.16-25

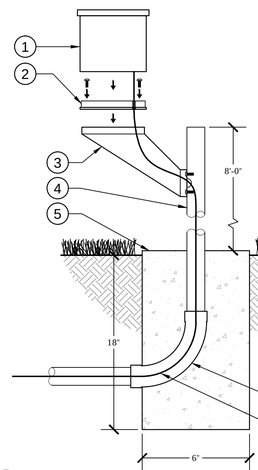

1. TIPPING RAIN GAUGE: RAIN BIRD ETM-RG
2. RAIN GAUGE MOUNTING PLATE
3. GALVANIZED STEEL BRACKET WITH HARDWARE
4. 1" SCH 40 GALVANIZED PIPE, 8' HT
5. CONCRETE FOOTER
6. SCH 40 PVC SWEEP ELL AND PVC CONDUIT TO CONTROLLER
7. SENSOR WIRE TO CONTROLLER

NOTE:

1. MOUNTING PLATE AND UV RESISTANT WIRE INCLUDED WITH TIPPING RAIN GAUGE. ALL MOUNTING HARDWARE AND BRACKET TO BE PROVIDED BY CONTRACTOR.
2. MOUNT WHERE DEVICE WILL BE EXPOSED TO UNOBSTRUCTED RAINFALL, BUT NOT IN PATH OF SPRINKLER SPRAY.

6 TIPPING RAIN GAUGE - POLE MOUNT

3" = 1'-0" 32 8409.83-03

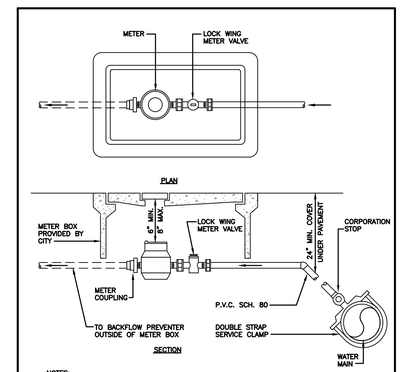

NOTES:

1. LOCATE BOX 12" OUTSIDE OF STREET R/W LINE.
2. CITY RESPONSIBILITY ENDS AT CUSTOMER SIDE OF METER.
3. METERS UP TO 2" SHALL BE FURNISHED AND INSTALLED BY CITY. (ALL OTHER WORK BY CUSTOMER)

DRAWN BY: JJW	SCALE: NONE	
APPROVED BY:	REV. FEB. 2002	
CITY OF MARGATE	STANDARD WATER AND SEWER DETAILS	
DEPT. OF ENVIRONMENTAL & ENGINEERING SERVICES	METER INSTALLATION FOR 1 1/2"	SD-3

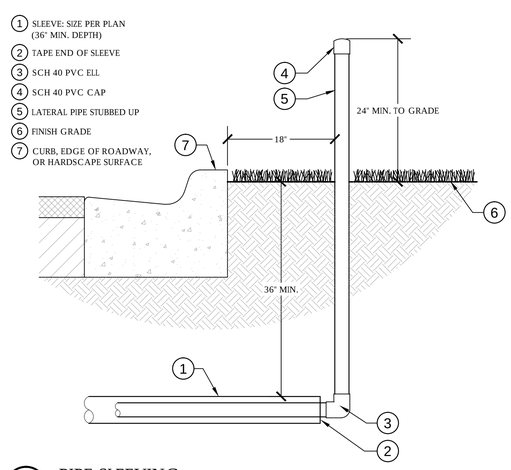

1. SLEEVE: SIZE PER PLAN (36" MIN. DEPTH)
2. TAPE END OF SLEEVE
3. SCH 40 PVC ELL
4. SCH 40 PVC CAP
5. LATERAL PIPE STUBBED UP
6. FINISH GRADE
7. CURB, EDGE OF ROADWAY, OR HARDSCAPE SURFACE

7 PIPE SLEEVING

1" = 1'-0" 328409.76-32

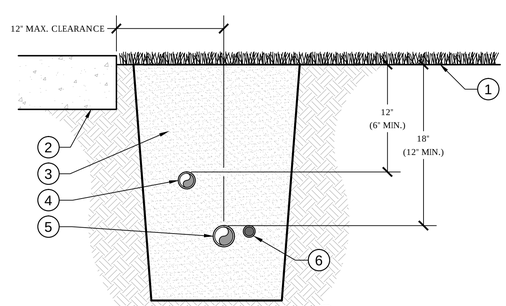

NOTE:

- FIELD ADJUST PIPING AS NECESSARY TO AVOID CONFLICT WITH DRAINAGE STRUCTURES, UTILITIES, AND PLANTINGS.
- REFER TO FLORIDA BUILDING CODE APPENDIX F FOR MINIMUM PIPE DEPTH OF COVER.
- WHERE MINIMUM PIPE DEPTH OF COVER IS NOT POSSIBLE, PIPE SLEEVING SHALL BE NECESSARY TO PROTECT PIPE IN SHALLOW AREAS.

1. FINISH GRADE
2. CURB, EDGE OF ROADWAY, OR HARDSCAPE SURFACE
3. BACKFILL PER IRRIGATION SPECIFICATIONS
4. IRRIGATION LATERAL PIPE (AS SPECIFIED) 12" DEPTH, 6" MINIMUM DEPTH
5. IRRIGATION MAINLINE PIPE (AS SPECIFIED) 18" DEPTH, 12" MINIMUM DEPTH
6. LOW VOLTAGE IRRIGATION CONTROL WIRE IN SCHEDULE 40 PVC CONDUIT (SIZE AS REQUIRED)

8 MAINLINE AND LATERAL PIPING

1 1/2" = 1'-0" 328409.76-37

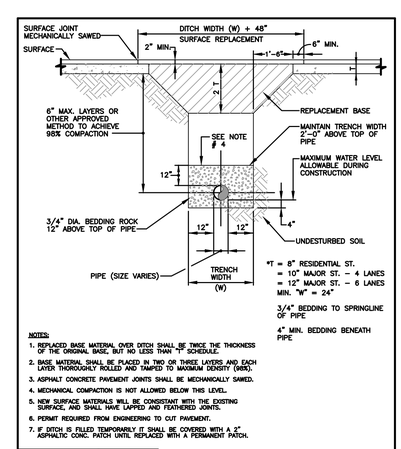

NOTES:

1. REPLACED BASE MATERIAL OVER DITCH SHALL BE TWICE THE THICKNESS OF THE ORIGINAL BASE, BUT NO LESS THAN "T" SCHEDULE.
2. BASE MATERIAL SHALL BE PLACED IN TWO OR THREE LAYERS AND EACH LAYER THOROUGHLY ROLLED AND TAMPED TO MAXIMUM DENSITY (98%).
3. ASPHALT CONCRETE PAVEMENT JOINTS SHALL BE MECHANICALLY SAWED.
4. MECHANICAL COMPACTION IS NOT ALLOWED BELOW THIS LEVEL.
5. NEW SURFACE MATERIALS WILL BE CONSISTANT WITH THE EXISTING SURFACE, AND SHALL HAVE LAPPED AND FEATHERED JOINTS.
6. PERMIT REQUIRED FROM ENGINEERING TO CUT PAVEMENT.
7. IF DITCH IS FILLED TEMPORARILY IT SHALL BE COVERED WITH A 2" ASPHALTIC CONC. PATCH UNTIL REPLACED WITH A PERMANENT PATCH.

DRAWN BY: JJW	SCALE: NONE	
APPROVED BY:	REV. JAN. 2010	
CITY OF MARGATE	STANDARD DETAILS	
DEPT. OF ENVIRONMENTAL & ENGINEERING SERVICES	TRENCH DETAIL	SD-28

IRRIGATION SCHEDULE

SYMBOL	MANUFACTURER/MODEL/DESCRIPTION	QTY	ARC	PSI	GPM	RADIUS
	Rain Bird RD-06-S-P30-F-NP 15 Strip Series 6" pop-up, with 30 psi in-stem pressure regulation, check valve, flow-shield, and non-potable cover.	4	LCS	30	0.49	4'x15'
	Rain Bird RD-06-S-P30-F-NP 15 Strip Series 6" pop-up, with 30 psi in-stem pressure regulation, check valve, flow-shield, and non-potable cover.	49	SST	30	1.21	4'x30'
	Rain Bird RD-06-S-P30-F-NP HE-VAN-10 6" pop-up, with 30 psi in-stem pressure regulation, check valve, flow-shield, and non-potable cover.	34	Ñ180ì	30	Ñ0.89	10'
	Rain Bird RD-06-S-P30-F-NP HE-VAN-15 6" pop-up, with 30 psi in-stem pressure regulation, check valve, flow-shield, and non-potable cover.	273	Ñ180ì	30	Ñ1.85	15'

SYMBOL	MANUFACTURER/MODEL/DESCRIPTION	QTY
	Rain Bird PESBR-PRS-D 1-1/2" Chlorine-resistant remote control valve with scrubber mechanism, purple flow control handle, and pressure regulator module.	14
	Nibco T-113 2" Class 125 bronze gate shut off valve with wheel handle.	2
BF	Wilkins 720A 1-1/2" Pressure vacuum breaker.	1
C	Rain Bird ESP8LXMEF-LXMMPED with 3 ESPLXMSM4 20 station module controller with flow sensing and water management capabilities, mounted on a powder-coated metal pedestal.	1
R	Rain Bird ETC-LX with ETM-RG ET manager cartridge with tipping rain gauge. Contractor to include 2 year subscription service.	1
M	Water Meter 1-1/2" 2" Schedule 80 PVC Service. 50 GPM at 65 PSI.	1
	Irrigation Lateral Line: PVC Class 200 SDR 21 PVC Class 200 irrigation pipe.	6,400 l.f.
	Irrigation Mainline: PVC Class 200 SDR 21 PVC Class 200 irrigation pipe.	3,000 l.f.
	Pipe Sleeve: PVC Schedule 40 Typical pipe sleeve for irrigation pipe. Pipe sleeve size shall allow for irrigation piping and their related couplings to easily slide through sleeving material. Extend sleeves 18 inches beyond edges of paving or construction.	1,000 l.f.

Valve Callout

- Valve Number
- Valve Flow
- Valve Size

CHEN•MOORE &ASSOCIATES
Civil & Environmental Engineers, Landscape Architects and Planners
Your trusted Advisor for Infrastructure and Planning Needs for 25 Years
500 West Cypress Creek Road • Suite 630
Fort Lauderdale, FL • 33309
(954) 730-0707
www.chenmoore.com
Fort Lauderdale • Miami • West Palm Beach • North Central Florida • Treasure Coast
CERTIFICATES OF AUTHORIZATION EB0004593 LC26000425

CLIENT:

CITY OF MARGATE, FLORIDA
PARKS AND RECREATION
6199 NW 10th Street
Margate, FL • 33063
(954) 972-6458
www.margatefl.com

PROJECT INFO:

HOLIDAY SPRINGS BOULEVARD MEDIAN IRRIGATION
MARGATE, FLORIDA
FOR: CITY OF MARGATE, FLORIDA

SEAL:

CRISTOBAL BETANCOURT, RLA
FLORIDA REG.# 6666941

NO.	DATE	REVISION
1	11/6/15	GIS/PLAN UPDATES PER CITY COMMENTS

DES.	DWN.	CHK.
MSB	MSB	CAB

100% CONSTRUCTION DOCUMENTS

088.004 | 2014-07-22

IRRIGATION DETAILS

L1.05

V:\PROJECTS\2014\14-088.004 - HOLIDAY SPRINGS BLVD IRRIGATION\DESIGN\CAD\14-00088.004_IRR.DWG 11/18/15 by SHORTAK

IRRIGATION SPECIFICATIONS

1. GENERAL

1.1. THE SYSTEM HAS BEEN DESIGNED TO CONFORM WITH THE REQUIREMENTS OF ALL APPLICABLE CODES. SHOULD ANY CONFLICT EXIST, THE REQUIREMENTS OF THE CODES SHALL PREVAIL. IT IS THE RESPONSIBILITY OF THE OWNER/INSTALLATION CONTRACTOR TO INSURE THE ENTIRE SYSTEM IS INSTALLED ACCORDING TO ALL APPLICABLE LAWS, RULES, REGULATIONS AND CONVENTIONS. IRRIGATION CONTRACTOR IS RESPONSIBLE FOR OBTAINING ALL REQUIRED PERMITS ACCORDING TO FEDERAL, STATE AND LOCAL LAWS.

1.2. CONTRACTOR TO VERIFY LOCATION OF ALL EXISTING UTILITIES.

1.3. IT SHALL BE THE CONTRACTOR'S SOLE RESPONSIBILITY TO TAKE THE NECESSARY PRECAUTIONS TO ENSURE PROPER SAFETY AND WORKMANSHIP WHEN WORKING IN THE VICINITY OF EXISTING UTILITY LINES.

1.4. CONTRACTOR SHALL BE RESPONSIBLE TO COORDINATE AND VERIFY PROPER CLEARANCE WITH FPL ON ANY WORK IN THE VICINITY OF OVERHEAD OR UNDERGROUND POWER LINES.

1.5. THE CONTRACTOR MUST SUBMIT FOR APPROVAL, PRIOR TO INSTALLATION, COPIES OF THE MANUFACTURER'S CUT SHEETS/SPECIFICATIONS FOR ALL COMPONENTS TO BE USED IN THE IRRIGATION SYSTEM.

1.6. THE IRRIGATION CONTRACTOR SHALL BE CERTIFIED AS A CERTIFIED IRRIGATION CONTRACTOR BY THE IRRIGATION ASSOCIATION. THE CERTIFICATION SHALL BE CURRENT AND IN GOOD STANDING.

2. SCOPE OF WORK

2.1. THE WORK SPECIFIED IN THIS SECTION CONSISTS OF FURNISHING ALL COMPONENTS NECESSARY FOR THE INSTALLATION, TESTING, AND DELIVERY OF A COMPLETE, FULLY FUNCTIONAL AUTOMATIC LANDSCAPE IRRIGATION SYSTEM THAT COMPLETELY COMPLIES WITH THE 100% IRRIGATION PLANS, SPECIFICATIONS, NOTES, DETAILS AND ALL APPLICABLE LAWS, REGULATIONS, CODES AND ORDINANCES. THIS WORK SHALL INCLUDE, BUT NOT BE LIMITED TO, THE PROVIDING OF ALL REQUIRED MATERIAL (PIPE, VALVES, FITTINGS, CONTROLLERS, WIRE, PRIMER, GLUE, ETC.), LAYOUT, PROTECTION OF THE PUBLIC, EXCAVATION, ASSEMBLY, INSTALLATION, BACK FILLING, COMPACTING, REPAIR OF ROAD SURFACES, CONTROLLER AND LOW VOLTAGE FEEDS TO VALVES, CLEANUP, MAINTENANCE, GUARANTEE AND AS-BUILT PLANS.

2.2. ALL IRRIGATED AREAS SHALL PROVIDE 100% HEAD-TO-HEAD COVERAGE FROM A FULLY AUTOMATIC IRRIGATION SYSTEM WITH A RAIN SENSOR AS SHOWN. THE RAIN SENSOR SHALL BE INSTALLED TO PREVENT ITS ACTIVATION BY ADJACENT HEADS. ALL WATERING PROCEDURES SHALL CONFORM TO LOCAL CODES, AS WELL AS THIS PROJECT'S REGIONAL WATER MANAGEMENT DISTRICT RESTRICTIONS AND REGULATIONS. ZONES ARE PRIORITIZED FIRST BY PUBLIC SAFETY AND THEN BY HYDRAULIC CONCERNS. THIS SEQUENCING WILL BE A MANDATORY PUNCH LIST ITEM. THESE PLANS HAVE BEEN DESIGNED TO SATISFY/EXCEED THE FLORIDA BUILDING CODE (FBC) APPENDIX F AND THE FLORIDA IRRIGATION SOCIETY STANDARDS AND SPECIFICATIONS FOR TURF AND LANDSCAPE IRRIGATION SYSTEMS, FOURTH EDITION.

2.3. CONTRACTOR SHALL VERIFY THE LOCATION OF ALL UNDERGROUND UTILITIES 72 HOURS PRIOR TO COMMENCEMENT OF WORK.

2.4. IT IS THE RESPONSIBILITY OF THE IRRIGATION CONTRACTOR TO FAMILIARIZE THEMSELVES WITH ALL GRADE DIFFERENCES, LOCATION OF WALLS, RETAINING WALLS, STRUCTURES AND UTILITIES. DO NOT WILLFULLY INSTALL THE SPRINKLER SYSTEM AS SHOWN ON THE DRAWINGS WHEN IT IS OBVIOUS IN THE FIELD THAT UNKNOWN OBSTRUCTION, GRADE DIFFERENCES OR DIFFERENCES IN THE AREA DIMENSIONS EXIST THAT MIGHT NOT HAVE BEEN CONSIDERED IN THE DESIGN. SUCH OBSTRUCTIONS, OR DIFFERENCES, SHOULD BE BROUGHT TO THE ATTENTION OF THE OWNER' AUTHORIZED REPRESENTATIVE. IN THE EVENT THIS NOTIFICATION IS NOT PERFORMED, THE IRRIGATION CONTRACTOR SHALL ASSUME FULL RESPONSIBILITY FOR ANY REVISIONS NECESSARY.

2.5. IRRIGATION CONTRACTOR SHALL REPAIR OR REPLACE ALL EXISTING SITE ITEMS DAMAGED BY THEIR WORK. IRRIGATION CONTRACTOR SHALL COORDINATE THEIR WORK WITH OTHER CONTRACTORS FOR THE LOCATION AND INSTALLATION OF PIPE SLEEVES AND LATERALS THROUGH WALLS, UNDER ROADWAYS AND PAVING, ETC.

2.6. THE CONTRACTOR SHALL TAKE IMMEDIATE STEPS TO REPAIR, REPLACE, OR RESTORE ALL SERVICES TO ANY UTILITIES WHICH ARE DISRUPTED DUE TO THEIR OPERATIONS. ALL COSTS INVOLVED IN DISRUPTION OF SERVICE AND REPAIRS DUE TO NEGLIGENCE ON THE PART OF THE CONTRACTOR SHALL BE THE CONTRACTOR'S RESPONSIBILITY.

3. SUBMITTALS

3.1. THE CONTRACTOR SHALL PROVIDE FOR APPROVAL PRIOR TO INSTALLATION, MANUFACTURER&S PRODUCT DESCRIPTION SHEETS/SPECIFICATIONS FOR ALL MAJOR COMPONENTS OF THE IRRIGATION SYSTEM. MODEL NUMBERS SHALL BE HIGHLIGHTED OR CIRCLED.

3.2. NO SUBSTITUTIONS OR DEVIATIONS FROM THE SPECIFIED BRANDS, MODELS, OR SIZES SHALL BE PERMITTED, EXCEPT WITH WRITTEN APPROVAL FROM THE LANDSCAPE ARCHITECT OF RECORD.

3.3. ANY MAJOR DESIGN CHANGES SHALL BE BROUGHT TO THE ATTENTION OF THE LANDSCAPE ARCHITECT OF RECORD PRIOR TO CONSTRUCTION; CONTRACTOR PROCEEDS WITH CHANGES AT OWN RISK. DESIGN CHANGES, SUBSTITUTIONS, OR DEVIATIONS NOT APPROVED BY THE LANDSCAPE ARCHITECT OF RECORD WILL RESULT IN REJECTION AND REPLACEMENT OF MATERIALS AT NO ADDITIONAL COST TO THE OWNER.

4. PERMITTING

4.1. CONTRACTOR SHALL OBTAIN AN ENGINEERING PERMIT FROM THE CITY OF MARGATE FOR ANY WORK COMPLETED IN CITY RIGHT-OF-WAY.

4.2. CONTRACTOR SHALL OBTAIN A BUILDING PERMIT FROM THE CITY OF MARGATE FOR IRRIGATION AND ELECTRICAL WORK.

5. POST CONSTRUCTION DOCUMENTATION

5.1. DOCUMENTATION:

5.1.1. PROVIDE THE MANUFACTURERS& RECOMMENDED OPERATING INSTRUCTIONS FOR ALL MAJOR COMPONENTS INCORPORATED INTO THE IRRIGATION SYSTEM.

5.1.2. PROVIDE SYSTEM OPERATION MANUALS, MAINTENANCE SCHEDULES, RECOMMENDED SCHEDULE OF OPERATION INCLUDED AVERAGE APPLICATION RATES WITH SEASONAL ADJUSTMENTS FOR EACH ZONE.

5.1.3. PROVIDE ALL REQUIRED TESTING AND INSPECTION CERTIFICATES TO THE OWNER OR OWNER&S REPRESENTATIVE

5.2. AS-BUILT DRAWINGS: PROVIDE RECORD DRAWINGS AND PLANS SHOWING ALL CHANGES IN THE DESIGN TO INDICATE THE ACTUAL INSTALLATION AND LOCATION OF ALL EQUIPMENT AND MATERIALS. THE FOLLOWING SPECIFIC ITEMS MUST BE INCLUDED:

5.2.1. LOCATION AND SIZE OF MAINLINE PIPING, LATERAL PIPING, AND PIPE SLEEVING.

5.2.2. ISOLATION VALVES

5.2.3. REMOTE CONTROL VALVE LOCATIONS, SIZES, NUMBER, AND AREA OF COVERAGE SHOWN USING DIFFERENT COLORS.

5.2.4. SPLICE BOXES AND LOW VOLTAGE WIRING PATH.

5.2.5. CONTROLLER AND RAIN SHUTOFF DEVICES.

5.2.6. POINT OF CONNECTION INCLUDING THE TYPE OF WATER SOURCE, SIZE, FLOW RATE, AND OPERATING PRESSURE.

5.2.7. DATE AND SCALE.

5.2.8. CONTRACTOR&S NAME, ADDRESS, AND TELEPHONE NUMBER.

5.2.9. THE AS-BUILT DRAWINGS SHALL BE SIGNED BY A FLORIDA REGISTERED LANDSCAPE ARCHITECT OR PROFESSIONAL ENGINEER.

5.3. CONTRACTOR SHALL FURNISH FIVE EXTRA UNITS OF EACH TYPE OF POPUP SPRAY AND EMITTER THAT MATCH PRODUCTS INSTALLED AND THAT ARE PACKAGED WITH PROTECTIVE COVERING FOR STORAGE AND IDENTIFIED WITH LABELS DESCRIBING CONTENTS. INCLUDE TOOLS TO SERVICE THESE PRODUCTS.

6. FINAL ACCEPTANCE

6.1. FINAL ACCEPTANCE OF THE IRRIGATION SYSTEM WILL BE GIVEN AFTER THE FOLLOWING DOCUMENTS AND CONDITIONS HAVE BEEN COMPLETED AND APPROVED. FINAL PAYMENT WILL NOT BE RELEASED UNTIL THESE CONDITIONS ARE SATISFIED.

6.1.1. FINAL WALK-THRU AND CORRECTION OF ALL PUNCH LIST ITEMS.

6.1.2. COMPLETION AND ACCEPTANCE OF AS-BUILT RECORD DRAWINGS.

6.1.3. TURNOVER OF ALL REQUIRED PARTS AND TOOLS AS OUTLINED IN THE PROJECT SPECIFICATIONS.

7. GUARANTEE

7.1. FULLY WARRANT THE LANDSCAPE IRRIGATION SYSTEM FOR A PERIOD OF ONE (1) YEAR AFTER THE WRITTEN FINAL ACCEPTANCE.

7.2. DURING THE WARRANTY PERIOD, ENFORCE MANUFACTURER'S AND SUPPLIER'S WARRANTIES. MALFUNCTIONS, DEFICIENCIES, BREAKS, DAMAGES, DISREPAIR OR OTHER DISORDERS DUE TO MATERIALS, WORKMANSHIP, OR INSTALLATION BY THE CONTRACTOR AND HIS SUPPLIERS SHALL BE IMMEDIATELY AND PROPERLY CORRECTED.

7.3. REPAIR DAMAGES PROMPTLY WHICH ARE CAUSED BY SYSTEM MALFUNCTION.

8. POINT OF CONNECTION (P.O.C.)

8.1. THE POINT OF CONNECTION (P.O.C.) IS A PROPOSED 1-1/2" WATER METER WITH A 2" SCHEDULE 80 SERVICE LINE, UTILIZING AN EXISTING POTABLE WATER MAIN. THE P.O.C. MUST BE CAPABLE OF DELIVERING A MINIMUM OF 50 GPM AT 65 PSI. CONTRACTOR SHALL VERIFY THESE MINIMUM CONDITIONS CAN BE MET PRIOR TO BEGINNING IRRIGATION SYSTEM INSTALLATION.

8.2. IF THE CONDITIONS CAN NOT BE MET, THE CONTRACTOR MUST NOTIFY THE DESIGNER PRIOR TO PROCEEDING WITH THE WORK. IF THE CONTRACTOR DOES NOT DO SO, THE CONTRACTOR PROCEEDS AT THEIR OWN RISK AND BECOMES RESPONSIBLE FOR ANY FUTURE WORK REQUIRED TO MAKE THE SYSTEM PERFORM AS REQUIRED.

9. PIPING

9.1. MAINLINE PIPE: PVC CLASS 200 SDR 21, NON-GASKETED, SOLVENT WELD, WITH SCHEDULE 40 PVC FITTINGS.

9.2. LATERAL PIPE: PVC CLASS 200 SDR 21, NON-GASKETED, SOLVENT WELD, WITH SCHEDULE 40 PVC FITTINGS.

9.3. THREADED PIPE: PVC SCHEDULE 80.

9.4. PIPE LOCATIONS SHOWN ON THE PLAN ARE SCHEMATIC AND SHALL BE ADJUSTED IN THE FIELD. WHEN LAYING OUT MAINLINES PLACE A MAXIMUM OF 12" AWAY FROM EITHER THE BACK OF CURB, FRONT OF WALK, BACK OF WALK, OR OTHER HARDSCAPE TO ALLOW FOR EASE IN LOCATING AND PROTECTION FROM PHYSICAL DAMAGE. INSTALL ALL LATERAL PIPE NEAR EDGES OF PAVEMENT OR AGAINST BUILDINGS WHENEVER POSSIBLE TO ALLOW SPACE FOR PLANT ROOT BALLS. ALWAYS INSTALL PIPING INSIDE PROJECT PROPERTY BOUNDARY.

9.5. PIPES SHALL ALWAYS BE PLACED IN PLANTING BEDS. IF IT IS NECESSARY TO HAVE PIPING UNDER HARDSCAPES, SUCH AS ROADS, WALKS, AND PATIOS, THE PIPES MUST BE SLEEVED USING SCH 40 PVC WITH THE SLEEVE DIAMETER BEING TWICE THE SIZE OF THE PIPE IT IS CARRYING WITH A MINIMUM SLEEVE SIZE OF 2".

9.6. PIPE SIZES SHALL CONFORM TO THOSE SHOWN ON THE DRAWINGS. NO SUBSTITUTIONS OF SMALLER PIPE SIZES SHALL BE PERMITTED, BUT SUBSTITUTIONS OF LARGER SIZES MAY BE APPROVED. ALL DAMAGED AND REJECTED PIPE SHALL BE REMOVED FROM THE SITE AT THE TIME OF SAID REJECTION.

9.7. CONTRACTOR TO ENSURE ALL MAINLINE PIPING IS PROPERLY RESTRAINED USING MECHANICAL JOINT FITTINGS, RESTRAINING COLLARS, THREADED RODS, THRUST BLOCKS, ETC., AS AND WHERE REQUIRED. CONTRACTOR SHALL REFER TO PIPE MANUFACTURER'S RECOMMENDED INSTALLATION PRACTICES FOR FURTHER DIRECTION.

9.8. PVC PIPE JOINT COMPOUND AND PRIMER: SLOW-DRYING, HEAVY DUTY CEMENT AND TINTED (PURPLE) PRIMER THAT IS COMPATIBLE WITH THE CEMENT. THE PVC CEMENT SHALL BE WELD-ON 2711 GREY AND THE PRIMER SHALL BE WELD-ON P70 PURPLE PRIMER, OR APPROVED EQUALS.

9.9. MAIN LINE PIPE DEPTH MEASURED TO THE TOP OF PIPE SHALL BE 18" MINIMUM, 36" MINIMUM AT VEHICULAR CROSSINGS.

9.10. LATERAL LINE DEPTHS MEASURED TO TOP OF PIPE SHALL BE 12" MINIMUM, 30" MINIMUM AT VEHICULAR CROSSINGS.

10. LAYOUT

10.1. LAY OUT IRRIGATION SYSTEM MAINLINES AND LATERAL LINES. MAKE THE NECESSARY ADJUSTMENTS AS REQUIRED TO TAKE INTO ACCOUNT ALL SITE OBSTRUCTIONS AND LIMITATIONS PRIOR TO EXCAVATING TRENCHES.

10.2. STAKE ALL SPRINKLER HEAD LOCATIONS. ADJUST LOCATION AND MAKE THE NECESSARY MODIFICATIONS TO NOZZLE TYPES, ETC. REQUIRED TO INSURE 100% HEAD TO HEAD COVERAGE. REFER TO THE EDGE OF PAVEMENT DETAIL ON THE IRRIGATION DETAIL SHEET.

10.3. SPRAY HEADS SHALL BE INSTALLED 4" FROM SIDEWALKS OR CURBED ROADWAYS AND 12" FROM UNCURBED ROADWAYS AND BUILDING FOUNDATIONS. ROTORS SHALL BE INSTALLED 4" FROM SIDEWALKS OR CURBED ROADWAYS, 12" FROM BUILDING FOUNDATIONS, AND 36" FROM UNCURBED ROADWAYS.

10.4. SHRUB HEADS SHALL BE INSTALLED ON 3/4" SCH 40 PVC RISERS. THE RISERS SHALL BE SET AT A MINIMUM OF 18" OFF SIDEWALKS, ROADWAY CURBING, BUILDING FOUNDATIONS, AND/OR ANY OTHER HARDSCAPED AREAS. SHRUB HEADS SHALL BE INSTALLED TO A STANDARD HEIGHT OF 4" BELOW MAINTAINED HEIGHT OF PLANTS AND SHALL BE INSTALLED WITHIN PLANTED MASSES TO BE LESS VISIBLE AND OFFER PROTECTION. PAINT ALL SHRUB RISERS WITH FLAT BLACK OR FOREST GREEN PAINT, UNLESS IRRIGATION SYSTEM WILL BE INSTALLED FROM A REUSE WATER SYSTEM WITH PURPLE PVC RISERS.

10.5. LOCATE VALVES PRIOR TO EXCAVATION. INSURE THAT THEIR LOCATION PROVIDES FOR EASY ACCESS AND THAT THERE IS NO INTERFERENCE WITH PHYSICAL STRUCTURES, PLANTS, TREES, POLES, ETC. VALVE BOXES MUST BE PLACED A MINIMUM OF 12" AND A MAXIMUM OF 15" FROM THE EDGE OF PAVEMENT, CURBS, ETC., AND THE TOP OF THE BOX MUST BE 2" ABOVE FINISH GRADE. NO VALVE BOXES SHALL BE INSTALLED IN TURF AREAS WITHOUT APPROVAL BY THE IRRIGATION DESIGNER; ONLY IN SHRUB BEDS. NEVER INSTALL VALVE BOXES WITHIN A SPORTS FIELD OR DESIGNATED PLAY AREA.

8. ELECTRICAL POWER SUPPLY

8.1. ELECTRICAL SUPPLY FOR PUMP AND CONTROLLER SHALL TO BE PROVIDED BY THE IRRIGATION CONTRACTOR. CONTRACTOR TO COORDINATE WITH LOCAL UTILITIES FOR THE INSTALLATION OF AND CONNECTION TO AVAILABLE SITE POWER SUPPLY FOR REQUIRED ELECTRICAL COMPONENTS AS SET FORTH IN THE 100% IRRIGATION PLANS.

8.2. ALL ELECTRICAL INSTALLATION TO COMPLY WITH THE NATIONAL ELECTRICAL CODE AND ANY AND ALL OTHER APPLICABLE ELECTRICAL CODES, LAWS AND REGULATIONS. A LICENSED ELECTRICIAN SHALL PERFORM ALL ELECTRICAL HOOK-UPS. POWER FOR THE CONTROLLER SHALL BE 120 VOLT, 20 AMP.

9. CONTROL WIRING

9.1. IRRIGATION CONTROL WIRE SHALL BE THERMOPLASTIC SOLID COPPER, SINGLE CONDUCTOR, LOW VOLTAGE IRRIGATION CONTROLLER WIRE SUITABLE FOR DIRECT BURIAL AND CONTINUOUS OPERATION AT RATED VOLTAGES.

9.2. ALL CONTROL WIRING SHALL BE PLACED IN PVC SCHEDULE 40 GRAY ELECTRICAL CONDUIT. AT TURNS IN DIRECTION UTILIZE JUNCTION BOXES.

9.3. TAPE AND BUNDLE CONTROL WIRES EVERY 10' AND RUN ADJACENT TO THE MAINLINE. AT ALL TURNS IN DIRECTION MAKE A 2' COIL OF WIRE. AT ALL VALVE BOXES COIL WIRE AROUND A 3/4" PIECE OF PVC PIPE TO MAKE A COIL USING 30 LINEAR INCHES OF WIRE. MAKE ELECTRICAL CONNECTIONS WITH 3M-DBY,DBR CONNECTORS.

9.4. NUMBER ALL WIRES USING AN ELECTRICAL BOOK OF NUMBERS ACCORDING TO THE PLANS. NUMBER WIRES IN ALL VALVE BOXES, JUNCTION BOXES AND AT THE CONTROLLER.

9.5. WIRE SIZED, NUMBERED AND COLORED AS FOLLOWS:

#12 WHITE FOR COMMON

#12 SPARE BLACK COMMON

#12 RED FOR HOT WIRES

#12 SPARE YELLOW HOT WIRE

10. CONTROLLER GROUNDING

10.1. CONTRACTOR TO UTILIZE 4"X8'X5/8" COPPER GROUNDING PLATES, 5/8"X10' COPPER CLAD GROUNDING RODS, 'ONE STRIKE' CAD WELLS AT ALL CONNECTION POINTS, #6 BARE COPPER WIRE, AND EARTH CONTACT MATERIAL. INSTALL THESE AND OTHER REQUIRED COMPONENTS AS OUTLINED IN THE DETAIL. CONTRACTOR TO VERIFY THAT THE EARTH TO GROUND RESISTANCE DOES NOT EXCEED 10 OHMS. CONTRACTOR SHALL PROVIDE A WRITTEN CERTIFICATION ON A LICENSED ELECTRICAL CONTRACTORS LETTER HEAD SHOWING THE DATE OF THE TEST, CONTROLLER LOCATION, AND TEST RESULTS. EACH CONTROLLER SHALL BE SO GROUNDED AND TESTED.

11. VALVES

11.1. SEQUENCE ALL VALVES SO THAT THE FARTHEST VALVE FROM THE P.O.C. OPERATES FIRST AND THE CLOSEST TO THE P.O.C. OPERATES LAST. THE CLOSEST VALVE TO THE P.O.C. SHOULD BE THE LAST VALVE IN THE PROGRAMMED SEQUENCE.

11.2. ADJUST THE FLOW CONTROL ON EACH RCV TO ENSURE SHUT OFF IN 10 SECONDS AFTER DEACTIVATION BY THE IRRIGATION CONTROLLER.

11.3. USING 3" HIGH NUMBER STENCILS, PAINT THE VALVE NUMBER IN WHITE ON THE LID OF EACH VALVE BOX.

12. EQUIPMENT

12.1. BUBBLERS SHALL BE INSTALLED USING SCH 80 NIPPLES AND SHALL BE PLACED AT THE BASE OF TREES FOR LOW LEVEL WATERING.

12.2. ALL POP-UP HEADS AND SHRUB RISERS SHALL BE PRESSURE COMPENSATING. ALL POP-UP HEADS SHALL BE MOUNTED ON FLEX-TYPE SWING JOINTS.

12.3. ALL SPRINKLER EQUIPMENT NOT OTHERWISE DETAILED OR SPECIFIED SHALL BE INSTALLED AS PER MANUFACTURER'S RECOMMENDATIONS AND SPECIFICATIONS, AND IN ACCORDANCE WITH LOCAL AND STATE LAWS.

13. SIGNAGE & MARKING

13.1. TO COMPLY WITH A FUTURE RECLAIMED WATER SOURCE, ALL SYSTEM COMPONENTS MUST BE PROPERLY MARKED AND IDENTIFIED AS NON-POTABLE TO PREVENT CROSS CONNECTION OF POTABLE AND NON-POTABLE SYSTEMS.

13.2. PROPERLY MARK AND IDENTIFY ALL PIPING, VALVES, SPRINKLER HEADS, VALVE BOXES, CONTROLLERS, AND IRRIGATED AREAS BY USING 'PANTONE PURPLE', AS REQUIRED. IN ADDITION TO COLOR CODING, SYSTEM COMPONENTS MUST INCLUDE THE TEXT: "DO NOT DRINK" IN ENGLISH AND SPANISH TOGETHER WITH THE EQUIVALENT STANDARD INTERNATIONAL SYMBOL. REFER TO 62-610.468, FAC.

14. TRENCHING

14.1. EXCAVATE STRAIGHT AND VERTICAL TRENCHES WITH SMOOTH, FLAT OR SLOPING BOTTOMS. TRENCH WIDTH AND DEPTH SHOULD BE SUFFICIENT TO ALLOW FOR THE PROPER VERTICAL AND HORIZONTAL SEPARATION BETWEEN PIPING AS SHOWN IN THE PIPE INSTALLATION DETAIL ON THE DETAIL SHEET.

14.2. PROTECT EXISTING LANDSCAPED AREAS. REMOVE AND REPLANT ANY DAMAGED PLANT MATERIAL UPON JOB COMPLETION. THE REPLACEMENT MATERIAL SHALL BE THE SAME GENUS, SPECIES, AND SIZE OF THE MATERIAL IT IS REPLACING. THE FINAL DETERMINATION AS TO WHAT NEEDS TO BE REPLACED AND THE ACCEPTABILITY OF THE REPLACEMENT MATERIAL SHALL BE SOLELY DETERMINED BY THE OWNER OR OWNER'S REPRESENTATIVE.

15. INSTALLATION

15.1. CUT ALL PIPE SQUARE AND DEBURR. CLEAN PIPE AND FITTINGS OF FOREIGN MATERIAL, THEN APPLY A SMALL AMOUNT OF PRIMER WHILE ENSURING THAT ANY EXCESS IS WIPED OFF IMMEDIATELY. PRIMER SHOULD NOT PUDDLE OR DRIP FROM PIPE OR FITTINGS. NEXT APPLY A THIN COAT OF PVC CEMENT. FIRST APPLY A THIN LAYER TO THE PIPE, THEN A THIN LAYER INSIDE THE FITTING, AND FINALLY ANOTHER VERY THIN LAYER ON THE PIPE. INSERT THE PIPE INTO THE FITTING. INSURE THAT THE PIPE IS INSERTED TO THE BOTTOM OF THE FITTING, THEN TURN THE PIPE A 1/4 TURN AND HOLD FOR 10 SECONDS. MAKE SURE THAT THE PIPE DOESN'T RECEDE FROM THE FITTING. IF THE PIPE ISN'T AT THE BOTTOM OF THE FITTING UPON COMPLETION, THE GLUE JOINT IS UNACCEPTABLE AND MUST BE DISCARDED.

15.2. PIPES MUST CURE A MINIMUM OF 30 MINUTES PRIOR TO HANDLING AND PLACING INTO TRENCHES. A LONGER CURING TIME MAY BE REQUIRED; REFER TO THE MANUFACTURER'S SPECIFICATIONS. THE PIPE MUST CURE A MINIMUM OF 24 HOURS PRIOR TO FILLING WITH WATER.

16. BACKFILLING

16.1. THE BACKFILL 6" BELOW AND 6" ABOVE ALL PIPING SHALL BE CLEAN SAND. ALL OTHER TRCNCH BACKFILL CAN BE NATIVE MATERIAL BUT SHALL NOT CONTAIN ANYTHING LARGER THAN 2" IN DIAMETER.

16.2. CONTRACTOR SHALL BACKFILL ALL PIPING, BOTH MAINLINE AND LATERALS, PRIOR TO PERFORMING ANY PRESSURE TESTS. THE PIPE SHALL BE BACKFILLED WITH THE EXCEPTION OF 2' ON EACH SIDE OF EVERY JOINT (BELL FITTINGS, 90'S, TEES, 45'S, ETC.). THESE JOINTS SHALL NOT BE BACKFILLED UNTIL ALL PIPING HAS SATISFACTORILY PASSED ITS APPROPRIATE PRESSURE TEST AS OUTLINED BELOW.

17. TESTING & FLUSHING

17.1. LEAKAGE TESTING

17.1.1. REMOVE ALL REMOTE CONTROL VALVES AND CAP USING A THREADED CAP. FILL MAINLINE WITH WATER AND PRESSURIZE THE SYSTEM TO 125 PSI. MONITOR THE SYSTEM PRESSURE AT TWO GAUGE LOCATIONS; THE GAUGE LOCATIONS MUST BE AT OPPOSITE ENDS OF THE MAINLINE. WITH THE SAME RESPECTIVE PRESSURES, MONITOR THE GAUGES FOR TWO HOURS.

17.1.2. PVC SOLVENT-WELD PIPE CONNECTIONS SHALL HAVE NO LEAKAGE. GASKETED PIPING SHALL LOSE NO MORE WATER THAN ALLOWED PER THE FLORIDA STATE BUILDING CODE, VOLUME II PLUMBING, PART VI, APPENDIX 'F'. REFER TO THIS SECTION FOR THE FORMULA TO BE USED TO CALCULATE THE MAXIMUM ALLOWABLE WATER LOSS DURING THE TESTING TIME.

17.1.3. REPAIR ALL LEAKS AND RETEST MAINLINE PIPING UNTIL THE TEST IS SUCCESSFUL.

17.1.4. LATERAL PIPE MUST BE FILLED AND VISUALLY CHECKED FOR LEAKS. ANY LEAKS DETECTED MUST BE REPAIRED. NO PRESSURE TEST OF THE LATERAL LINES IS REQUIRED.

17.2. FLUSHING:

17.2.1. PRIOR TO THE PLACEMENT OF HEADS, FLUSH ALL LINES FOR A MINIMUM OF 10 MINUTES OR UNTIL LINES ARE COMPLETELY CLEAN OF DEBRIS, WHICHEVER IS LONGER.

17.2.2. USE SCREENS IN HEADS AND ADJUST HEADS FOR PROPER COVERAGE AVOIDING EXCESS WATER ON WALLS, WALKS AND PAVING.

17.3. OPERATIONAL TESTING:

17.3.1. UPON COMPLETION OF BACKFILLING, FINISH GRADING AND CONTOURING, TEST THE ENTIRE SYSTEM FOR PROPER OPERATION, INCLUDING ELECTRICALLY ACTUATING THE REMOTE CONTROL VALVES. RUN EACH ZONE UNTIL WATER BEGINS TO PUDDLE OR RUN OFF. THIS WILL ALLOW DETERMINATION OF THE NUMBER OF IRRIGATION START TIMES NECESSARY TO MEET THE WEEKLY EVAPOTRANSPIRATION REQUIREMENTS OF THE PLANTING MATERIAL IN EACH ZONE. IN SANDY SOILS NO PUDDLING WILL OCCUR. IN THESE CASES, CALCULATE THE REQUIRED RUN TIMES.

17.3.2. ONCE THE MAINLINE AND LATERAL LINES HAVE PASSED THEIR RESPECTIVE TESTS AND THE SYSTEM IS COMPLETELY OPERATIONAL, A COVERAGE TEST AND DEMONSTRATION OF THE SYSTEM IS REQUIRED. THE IRRIGATION CONTRACTOR MUST DEMONSTRATE TO THE OWNER OR HIS/HER REPRESENTATIVE THAT PROPER COVERAGE IS OBTAINED AND THAT THE SYSTEM WORKS AUTOMATICALLY FROM THE CONTROLLER. THIS DEMONSTRATION REQUIRES THAT EACH ZONE BE TURNED ON IN THE PROPER SEQUENCE AS SHOWN ON THE PLANS FROM THE CONTROLLER. EACH ZONE WILL BE INSPECTED FOR PROPER COVERAGE AND FUNCTION. THE DETERMINATION OF PROPER COVERAGE AND FUNCTION WILL BE SOLELY DETERMINED BY THE OWNER OR OWNER'S REPRESENTATIVE.

VALVE SCHEDULE

NUMBER	MODEL	SIZE	TYPE	PSI	PSI @ POC	GPM	PRECIP
1	Rain Bird PESBR-PRS-D	1-1/2"	Turf Spray	38.82	69.55	47.08	1.48 in/h
2	Rain Bird PESBR-PRS-D	1-1/2"	Turf Spray	34.37	64.15	46.26	1.45 in/h
3	Rain Bird PESBR-PRS-D	1-1/2"	Turf Spray	37.53	54.95	37.82	1.48 in/h
4	Rain Bird PESBR-PRS-D	1-1/2"	Turf Spray	36.57	52.66	37.55	1.49 in/h
5	Rain Bird PESBR-PRS-D	1-1/2"	Turf Spray	34.15	47.02	37.66	1.42 in/h
6	Rain Bird PESBR-PRS-D	1-1/2"	Turf Spray	38.93	50.53	37.76	1.48 in/h
7	Rain Bird PESBR-PRS-D	1-1/2"	Turf Spray	34.08	42.09	38.11	1.52 in/h
8	Rain Bird PESBR-PRS-D	1-1/2"	Turf Spray	34.12	41.43	41.39	1.41 in/h
9	Rain Bird PESBR-PRS-D	1-1/2"	Turf Spray	34.00	43.07	40.70	1.36 in/h
10	Rain Bird PESBR-PRS-D	1-1/2"	Turf Spray	34.06	44.85	40.65	1.43 in/h
11	Rain Bird PESBR-PRS-D	1-1/2"	Turf Spray	34.41	49.79	45.02	1.48 in/h
12	Rain Bird PESBR-PRS-D	1-1/2"	Turf Spray	34.37	50.34	40.33	1.39 in/h
13	Rain Bird PESBR-PRS-D	1-1/2"	Turf Spray	36.33	56.52	43.60	1.33 in/h
14	Rain Bird PESBR-PRS-D	1-1/2"	Turf Spray	37.72	55.96	40.78	1.42 in/h

RUNTIME SUMMARY

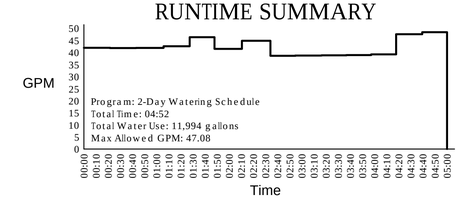

CHEN•MOORE &ASSOCIATES
Civil & Environmental Engineers, Landscape Architects and Planners
Your trusted Advisor for Infrastructure and Planning Needs for 25 Years
500 West Cypress Creek Road • Suite 630
Fort Lauderdale, FL • 33309
(954) 730-0707
www.chenmoore.com
Fort Lauderdale • Miami • West Palm Beach • North Central Florida • Treasure Coast
CERTIFICATES OF AUTHORIZATION
EB0004593 LC26000425

CLIENT:

CITY OF MARGATE, FLORIDA
PARKS AND RECREATION
6199 NW 10th Street
Margate, FL • 33063
(954) 972-6458
www.margatefl.com

PROJECT INFO:

HOLIDAY SPRINGS BOULEVARD MEDIAN IRRIGATION
MARGATE, FLORIDA
FOR: CITY OF MARGATE, FLORIDA

SEAL:

CRISTOBAL BETANCOURT, RLA
FLORIDA REG.# 6666941

NO.	DATE	REVISION
1	11/6/15	GIS/PLAN UPDATES PER CITY COMMENTS

MSB	MSB	CAB
DES.	DWN.	CHK.

100% CONSTRUCTION DOCUMENTS

088.004 | 2014-07-22

IRRIGATION SPECIFICATIONS

L1.06

V:\PROJECTS\2014\14-0088.004 - HOLIDAY SPRINGS BLVD IRRIGATION\DESIGN\CAD\14-0088.004_IRR.DWG 11/18/15 by SHORTAK

CITY OF
MARGATE
Together We Make It Great

ADDENDUM NO. 1

BID NO. 2016-009
HOLIDAY SPRINGS BOULEVARD MEDIAN IRRIGATION PROJECT

DATE: MARCH 22, 2016

TO ALL BIDDERS:

Please be aware of the following clarifications and/or changes to the above referenced bid:

1. **Please make the following changes:**

   a. The bid opening date and time for Bid No. 2016-009 - Holiday Springs Boulevard Median Irrigation Project has been revised. The new bid opening date and time shall be Tuesday, March 29, 2016 at 3:00 PM. A second addendum clarifying water and electrical service requirements will be issued soon.

   DELETE: All references to a March 23, 2016 bid opening.

   INSERT: Tuesday, March 29, 2016 at 3:00 PM as the new bid due date and time.

All other terms and conditions remain the same unless and until clarified by a future addendum.

Please sign and return the acknowledgment page of this addendum by email or by fax. The original acknowledgement page is to be included with your RFP proposal.

Spencer Shambray, CPPB
Purchasing Supervisor

ADDENDUM NO. 1 ACKNOWLEDGEMENT FORM
HOLIDAY SPRINGS BOULEVARD MEDIAN IRRIGATION PROJECT

BID NO. 2016-009

I acknowledge receipt of Addendum No. 1 for Bid No. 2016-009. This addendum contains two (2) pages.

Company Name:_____

Address:_____

Name of Signer:_____
(please print)

Signature:_____Date:_____

Telephone:_____Facsimile:_____

Please fax your completed form to (954) 935-5258 or e-mail to purchase@margatefl.com.

_____
Spencer Shambray, CPPB
Purchasing Supervisor

NOTE: The original of this form must be included with your RFP proposal and acknowledged on Page 30, "BID Proposal Form RFP No. 2016-009."

CITY OF
MARGATE
Together We Make It Great

ADDENDUM NO. 2

BID NO. 2016-009
HOLIDAY SPRINGS BOULEVARD MEDIAN IRRIGATION PROJECT

DATE: MARCH 24, 2016

TO ALL BIDDERS:

Please be aware of the following clarifications and/or changes to the above referenced bid:

1. **CLARIFICATIONS:**

   a. The contractor shall be responsible for making the water tap. The City will provide the meter and be responsible for all water usage costs.
   b. The contractor shall be responsible for coordinating the FPL electrical services and location. The City shall take ownership of the service and be responsible for all charges from FPL including electrical usage fees.

2. **Please make the following changes:**

   a. Part III "Drawings/Plans" of the bid document has been revised.

      DELETE: The cover and all six (6) pages (L1.01 – L1.06) of the existing drawings/plans found in Part III

      INSERT: The revised cover and six (6) pages (L1.01 – L1.06) of the revised drawings/plans and note the cloud revisions on page L1.03.

All other terms and conditions remain the same. **The bid submission date and time remains March 29, 2016 at 3:00 PM as stated in Addendum No. 1.**

Please sign and return the acknowledgment page of this addendum by email or by fax. The original acknowledgement page is to be included with your RFP proposal.

Spencer Shambray, CPPB
Purchasing Supervisor

ADDENDUM NO. 2 ACKNOWLEDGEMENT FORM
HOLIDAY SPRINGS BOULEVARD MEDIAN IRRIGATION PROJECT

BID NO. 2016-009

I acknowledge receipt of Addendum No. 2 for Bid No. 2016-009. This addendum contains nine (9) pages including the revised Drawings/Plans.

Company Name:_____

Address:_____

Name of Signer:_____
(please print)

Signature:_____Date:_____

Telephone:_____Facsimile:_____

Please fax your completed form to (954) 935-5258 or e-mail to purchase@margatefl.com.

Spencer Shambray, CPPB
Purchasing Supervisor

NOTE: The original of this form must be included with your Bid and acknowledged on Page 30, "Bid Proposal Form Bid No. 2016-009."

HOLIDAY SPRINGS BOULEVARD MEDIAN IRRIGATION

MARGATE, FLORIDA

FOR: CITY OF MARGATE, FLORIDA

100% CONSTRUCTION DOCUMENTS

2014-07-22 (ADDENDUM 1, 2016-03-23)

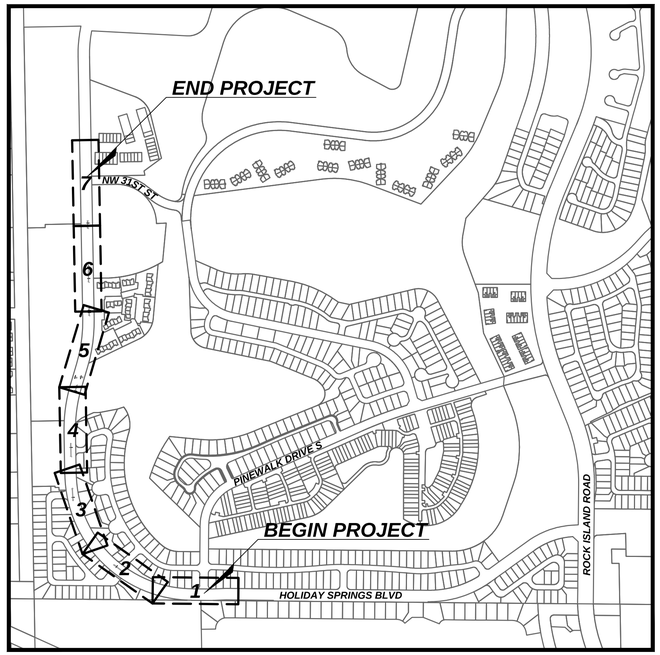

LOCATION MAP

SHEET INDEX

NO.	DRAWING	TITLE
1	L1.00	KEY SHEET
2	L1.01	IRRIGATION PLAN
3	L1.02	IRRIGATION PLAN
4	L1.03	IRRIGATION PLAN
5	L1.04	IRRIGATION PLAN
6	L1.05	IRRIGATION DETAILS
7	L1.06	IRRIGATION SPECIFICATIONS

CITY OF MARGATE, FLORIDA
PARKS AND RECREATION

6199 NW 10th Street
Margate, FL • 33063
(954) 972-6458
www.margatefl.com

CHEN•MOORE
&ASSOCIATES

500 West Cypress Creek Road • Suite 630
Fort Lauderdale, FL • 33309
(954) 730-0707

Fort Lauderdale • Miami • West Palm Beach • North Central Florida • Treasure Coast
www.chenmoore.com

V:\PROJECTS\2014\14-088.004 - HOLIDAY SPRINGS BLVD IRRIGATION\DESIGN\CAD\14-0088.004_IRR.DWG 3/23/16 by SBORTAK

IRRIGATION LEGEND

SYMBOL	MANUFACTURER/MODEL	RADIUS
	Rain Bird RD-06-S-P30-F-NP 15 Strip Series	4'x15'
	Rain Bird RD-06-S-P30-F-NP 15 Strip Series	4'x30'
	Rain Bird RD-06-S-P30-F-NP HE-VAN-10	10'
	Rain Bird RD-06-S-P30-F-NP HE-VAN-15	15'

SYMBOL	MANUFACTURER/MODEL
	Rain Bird PESBR-PRS-D 1-1/2"
	Nibco T-113 2"
BF	Wilkins 720A 1-1/2"

SYMBOL	MANUFACTURER/MODEL
C	Rain Bird ESP8LXMEF-LXMMPED with 3 ESPLXMSM4
R	Rain Bird ETC-LX with ETM-RG
M	Water Meter 1-1/2"
	Irrigation Lateral Line: PVC Class 200 SDR 21
	Irrigation Mainline: PVC Class 200 SDR 21
	Pipe Sleeve: PVC Schedule 40

Valve Callout
- Valve Number
- Valve Flow
- Valve Size

GENERAL NOTES

1. SITE BASE INFORMATION AND UTILITY LOCATIONS GENERATED FROM PUBLICLY AVAILABLE AERIAL PHOTOGRAPHY AND GIS DATA. CONTRACTOR TO VERITY LOCATION OF ALL EXISTING UTILITIES, TREES, AND SITE FEATURES PRIOR TO CONSTRUCTION.
2. IT SHALL BE THE CONTRACTOR'S SOLE RESPONSIBILITY TO TAKE THE NECESSARY PRECAUTIONS TO ENSURE PROPER SAFETY AND WORKMANSHIP WHEN WORKING IN THE VICINITY OF EXISTING UTILITY LINES.
3. CONTRACTOR SHALL BE RESPONSIBLE TO COORDINATE WITH FPL ON ANY WORK IN THE VICINITY OF OVERHEAD OR UNDERGROUND POWER LINES.
4. CONTRACTOR SHALL VERIFY PROPER CLEARANCE BELOW EXISTING OVERHEAD POWER LINES PRIOR TO WORKING WITHIN THE VICINITY THE POWER LINES.
5. MAINLINE LOCATION, WHERE SHOWN, IS FOR GRAPHIC CLARITY PURPOSES ONLY. INSTALL AT THE BACK OF CURB, FRONT OF WALK, BACK OF WALK, OR ADJACENT TO OTHER HARDSCAPES TO FACILITATE FUTURE LOCATION AND TO PROTECT FROM DAMAGE. ENSURE MAINLINE IS INSTALLED ACCORDING TO THE IRRIGATION SPECIFICATIONS AND DETAILS.
5. IF IT IS NECESSARY TO HAVE PIPING UNDER HARDSCAPE ITEMS, SUCH AS ROADS, WALKS AND PATIOS, THE PIPES MUST BE SLEEVED USING SCH 40 PVC WITH THE SLEEVE DIAMETER BEING AT LEAST TWICE THE SIZE OF THE PIPE IT IS CARRYING.
5. CONTRACTOR SHALL BE RESPONSIBLE FOR REPLACING TURF AREAS AS NECESSARY THAT HAS BEEN DAMAGED BY IRRIGATION SYSTEM INSTALLATION.
6. CONTRACTOR SHALL REPAIR AND REPLACE PAVEMENT REMOVED OR DAMAGED FOR IRRIGATION SLEEVING, REFER TO DETAIL SD-27, SHEET L1.05.
7. ALL SYSTEM COMPONENTS TO COMPLY WITH RECLAIMED WATER IDENTIFICATION REQUIREMENTS FOR FUTURE CONNECTION. PROPERLY MARK/IDENTIFY ALL PIPING, VALVES, SPRINKLER HEADS, VALVE BOXES, CONTROLLERS, AND IRRIGATED AREAS. COLOR CODE USING 'PANTONE PURPLE', AS REQUIRED.

811 KNOW WHAT'S BELOW ALWAYS CALL 811 BEFORE YOU DIG
It's fast. It's free. It's the law.
www.callsunshine.com

GRAPHIC SCALE
0 10 20 40
1 INCH = 20 FEET

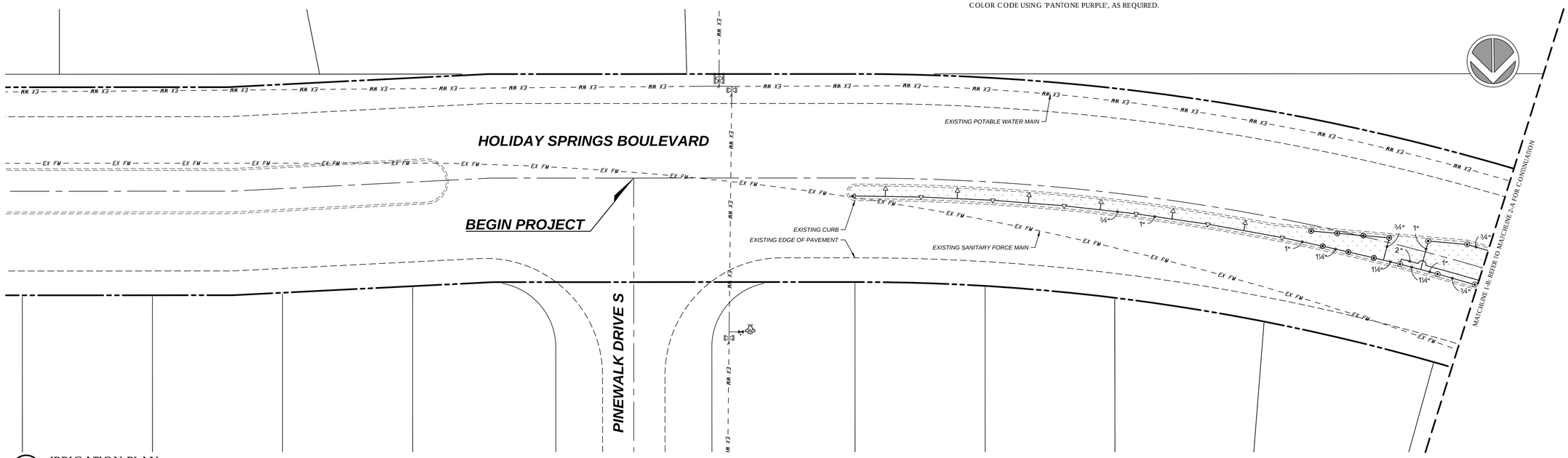

1 IRRIGATION PLAN
1" = 20'-0"

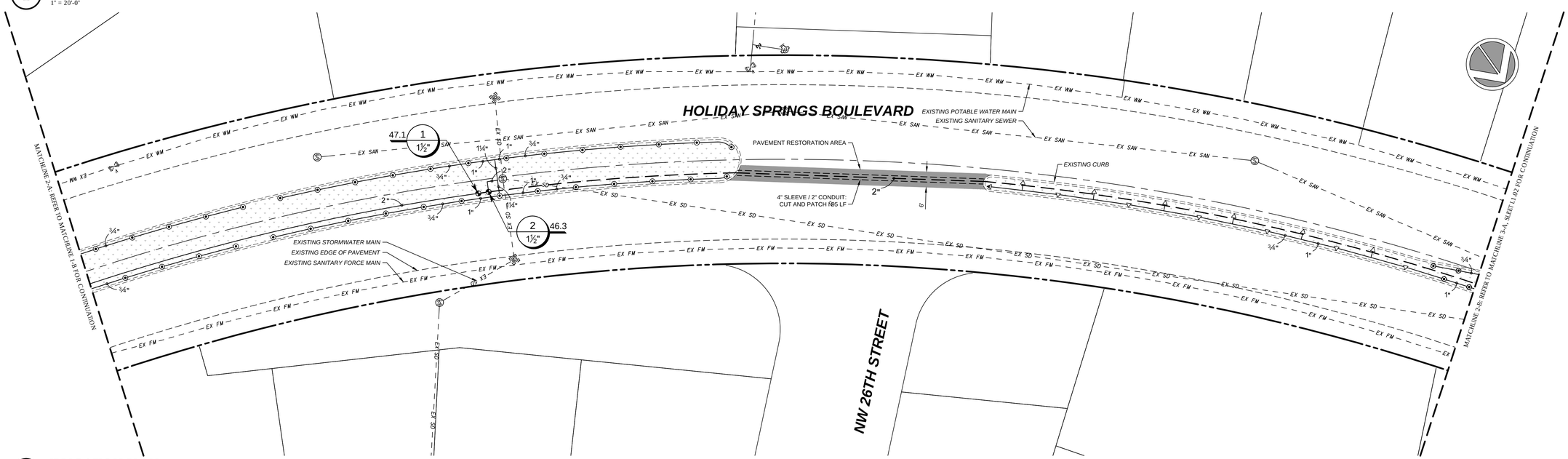

2 IRRIGATION PLAN
1" = 20'-0"

CHEN•MOORE &ASSOCIATES
Civil & Environmental Engineers, Landscape Architects and Planners
Your trusted Advisor for Infrastructure and Planning Needs for 25 Years
500 West Cypress Creek Road • Suite 630
Fort Lauderdale, FL • 33309
(954) 730-0707
www.chenmoore.com
Fort Lauderdale • Miami • West Palm Beach • North Central Florida • Treasure Coast
CERTIFICATES OF AUTHORIZATION
EB0004593 LC26000425

CLIENT:
CITY OF MARGATE, FLORIDA
PARKS AND RECREATION
6199 NW 10th Street
Margate, FL • 33063
(954) 972-6458
www.margatefl.com

PROJECT INFO:
HOLIDAY SPRINGS BOULEVARD MEDIAN IRRIGATION
MARGATE, FLORIDA
FOR: CITY OF MARGATE, FLORIDA

SEAL:

CRISTOBAL BETANCOURT, RLA
FLORIDA REG.# 6666941

NO.	DATE	REVISION
1	11/6/15	GIS/PLAN UPDATES PER CITY COMMENTS
2	3/23/16	ADDENDUM 1 PER CITY COMMENTS

MSB	MSB	CAB
DES.	DWN.	CHK.

100% CONSTRUCTION DOCUMENTS
088.004 | 2014-07-22
IRRIGATION PLAN
L1.01

V:\ PROJECTS \ 2014 \ 14-088.004 - HOLIDAY SPRINGS BLVD IRRIGATION \ DESIGN \ CAD \ 14-0088.004_IRR.DWG 3/23/16 by SBOREAK

IRRIGATION LEGEND

SYMBOL	MANUFACTURER/MODEL	RADIUS
	Rain Bird RD-06-S-P30-F-NP 15 Strip Series	4'x15'
	Rain Bird RD-06-S-P30-F-NP 15 Strip Series	4'x30'
	Rain Bird RD-06-S-P30-F-NP HE-VAN-10	10'
	Rain Bird RD-06-S-P30-F-NP HE-VAN-15	15'

SYMBOL	MANUFACTURER/MODEL
	Rain Bird PESBR-PRS-D 1-1/2"
	Nibco T-113 2"
BF	Wilkins 720A 1-1/2"

SYMBOL	MANUFACTURER/MODEL
C	Rain Bird ESP8LXMEF-LXMMPED with 3 ESPLXMSM4
R	Rain Bird ETC-LX with ETM-RG
M	Water Meter 1-1/2"
	Irrigation Lateral Line: PVC Class 200 SDR 21
	Irrigation Mainline: PVC Class 200 SDR 21
	Pipe Sleeve: PVC Schedule 40

Valve Callout
- Valve Number
- Valve Flow
- Valve Size

GENERAL NOTES

1. SITE BASE INFORMATION AND UTILITY LOCATIONS GENERATED FROM PUBLICLY AVAILABLE AERIAL PHOTOGRAPHY AND GIS DATA. CONTRACTOR TO VERITY LOCATION OF ALL EXISTING UTILITIES, TREES, AND SITE FEATURES PRIOR TO CONSTRUCTION.
2. IT SHALL BE THE CONTRACTOR'S SOLE RESPONSIBILITY TO TAKE THE NECESSARY PRECAUTIONS TO ENSURE PROPER SAFETY AND WORKMANSHIP WHEN WORKING IN THE VICINITY OF EXISTING UTILITY LINES.
3. CONTRACTOR SHALL BE RESPONSIBLE TO COORDINATE WITH FPL ON ANY WORK IN THE VICINITY OF OVERHEAD OR UNDERGROUND POWER LINES.
4. CONTRACTOR SHALL VERIFY PROPER CLEARANCE BELOW EXISTING OVERHEAD POWER LINES PRIOR TO WORKING WITHIN THE VICINITY THE POWER LINES.
5. MAINLINE LOCATION, WHERE SHOWN, IS FOR GRAPHIC CLARITY PURPOSES ONLY. INSTALL AT THE BACK OF CURB, FRONT OF WALK, BACK OF WALK, OR ADJACENT TO OTHER HARDSCAPES TO FACILITATE FUTURE LOCATION AND TO PROTECT FROM DAMAGE. ENSURE MAINLINE IS INSTALLED ACCORDING TO THE IRRIGATION SPECIFICATIONS AND DETAILS.
5. IF IT IS NECESSARY TO HAVE PIPING UNDER HARDSCAPE ITEMS, SUCH AS ROADS, WALKS AND PATIOS, THE PIPES MUST BE SLEEVED USING SCH 40 PVC WITH THE SLEEVE DIAMETER BEING AT LEAST TWICE THE SIZE OF THE PIPE IT IS CARRYING.
5. CONTRACTOR SHALL BE RESPONSIBLE FOR REPLACING TURF AREAS AS NECESSARY THAT HAS BEEN DAMAGED BY IRRIGATION SYSTEM INSTALLATION.
6. CONTRACTOR SHALL REPAIR AND REPLACE PAVEMENT REMOVED OR DAMAGED FOR IRRIGATION SLEEVING, REFER TO DETAIL SD-27, SHEET L1.05.
7. ALL SYSTEM COMPONENTS TO COMPLY WITH RECLAIMED WATER IDENTIFICATION REQUIREMENTS FOR FUTURE CONNECTION. PROPERLY MARK/IDENTIFY ALL PIPING, VALVES, SPRINKLER HEADS, VALVE BOXES, CONTROLLERS, AND IRRIGATED AREAS. COLOR CODE USING 'PANTONE PURPLE', AS REQUIRED.

811 KNOW WHAT'S BELOW ALWAYS CALL 811 BEFORE YOU DIG
It's fast. It's free. It's the law.
www.callsunshine.com

GRAPHIC SCALE
0 10 20 40
1 INCH = 20 FEET

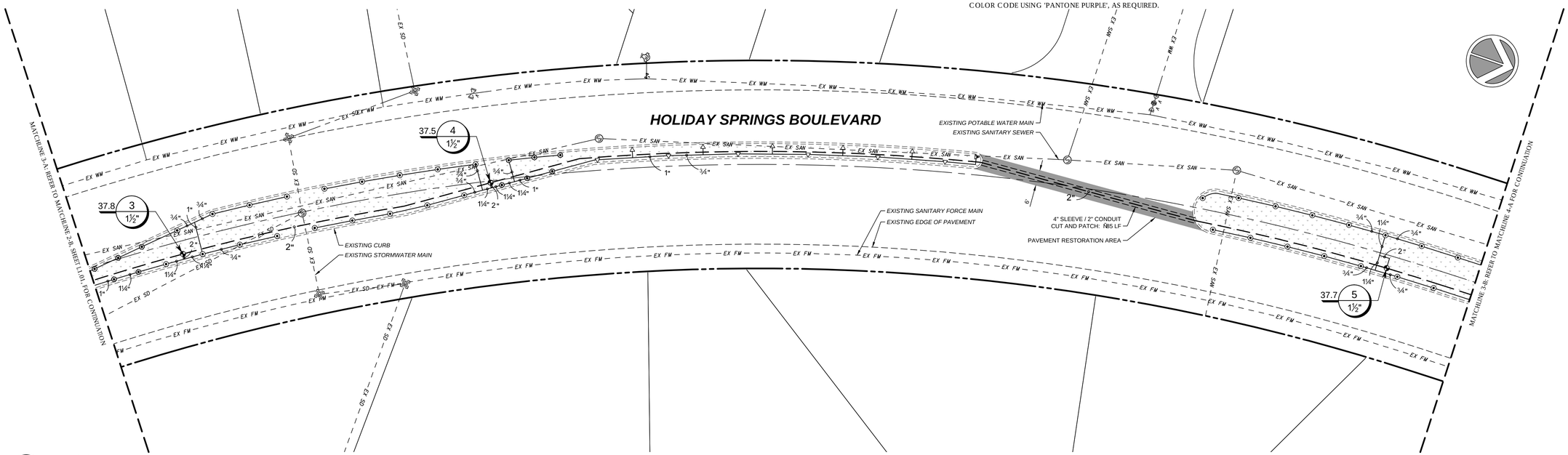

3 IRRIGATION PLAN
1" = 20'-0"

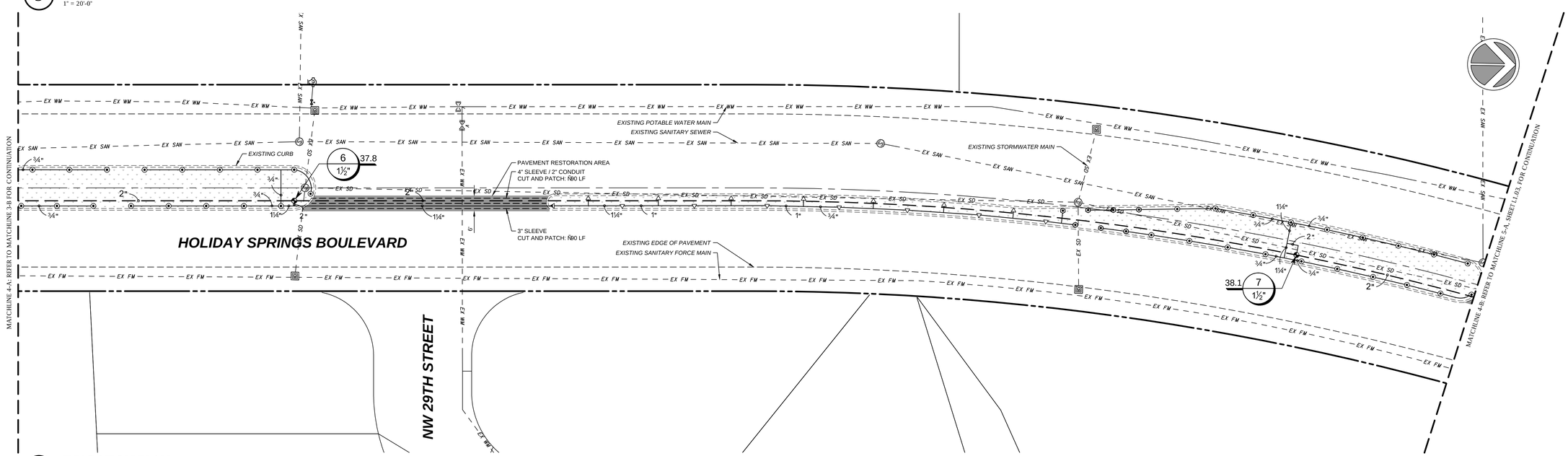

4 IRRIGATION PLAN
1" = 20'-0"

CHEN•MOORE &ASSOCIATES
Civil & Environmental Engineers, Landscape Architects and Planners
Your trusted Advisor for Infrastructure and Planning Needs for 25 Years
500 West Cypress Creek Road • Suite 630
Fort Lauderdale, FL • 33309
(954) 730-0707
www.chenmoore.com
Fort Lauderdale • Miami • West Palm Beach • North Central Florida • Treasure Coast
CERTIFICATES OF AUTHORIZATION
EB0004593 LC26000425

CLIENT:
CITY OF MARGATE, FLORIDA
PARKS AND RECREATION
6199 NW 10th Street
Margate, FL • 33063
(954) 972-6458
www.margatefl.com

PROJECT INFO:
HOLIDAY SPRINGS BOULEVARD MEDIAN IRRIGATION
MARGATE, FLORIDA
FOR: CITY OF MARGATE, FLORIDA

SEAL:

CRISTOBAL BETANCOURT, RLA
FLORIDA REG. # 6666941

NO.	DATE	REVISION
1	11/6/15	GIS/PLAN UPDATES PER CITY COMMENTS
2	3/23/16	ADDENDUM 1 PER CITY COMMENTS

DES.	DWN.	CHK.
MSB	MSB	CAB

100% CONSTRUCTION DOCUMENTS
088.004 | 2014-07-22
IRRIGATION PLAN
L1.02

V:\ PROJECTS \ 2014 \ 14-088.004 - HOLIDAY SPRINGS BLVD IRRIGATION \ DESIGN \ CAD \ 14-0088.004_IRR.DWG 3/23/16 by SBOHEAK

IRRIGATION LEGEND

SYMBOL	MANUFACTURER/MODEL	RADIUS
	Rain Bird RD-06-S-P30-F-NP 15 Strip Series	4'x15'
	Rain Bird RD-06-S-P30-F-NP 15 Strip Series	4'x30'
	Rain Bird RD-06-S-P30-F-NP HE-VAN-10	10'
	Rain Bird RD-06-S-P30-F-NP HE-VAN-15	15'

SYMBOL	MANUFACTURER/MODEL
	Rain Bird PESBR-PRS-D 1-1/2"
	Nibco T-113 2"
BF	Wilkins 720A 1-1/2"

SYMBOL	MANUFACTURER/MODEL
C	Rain Bird ESP8LXMEF-LXMMPED with 3 ESPLXMSM4
R	Rain Bird ETC-LX with ETM-RG
M	Water Meter 1-1/2"
	Irrigation Lateral Line: PVC Class 200 SDR 21
	Irrigation Mainline: PVC Class 200 SDR 21
	Pipe Sleeve: PVC Schedule 40

Valve Callout
- Valve Number
- Valve Flow
- Valve Size

GENERAL NOTES

1. SITE BASE INFORMATION AND UTILITY LOCATIONS GENERATED FROM PUBLICLY AVAILABLE AERIAL PHOTOGRAPHY AND GIS DATA. CONTRACTOR TO VERITY LOCATION OF ALL EXISTING UTILITIES, TREES, AND SITE FEATURES PRIOR TO CONSTRUCTION.
2. IT SHALL BE THE CONTRACTOR'S SOLE RESPONSIBILITY TO TAKE THE NECESSARY PRECAUTIONS TO ENSURE PROPER SAFETY AND WORKMANSHIP WHEN WORKING IN THE VICINITY OF EXISTING UTILITY LINES.
3. CONTRACTOR SHALL BE RESPONSIBLE TO COORDINATE WITH FPL ON ANY WORK IN THE VICINITY OF OVERHEAD OR UNDERGROUND POWER LINES.
4. CONTRACTOR SHALL VERIFY PROPER CLEARANCE BELOW EXISTING OVERHEAD POWER LINES PRIOR TO WORKING WITHIN THE VICINITY THE POWER LINES.
5. MAINLINE LOCATION, WHERE SHOWN, IS FOR GRAPHIC CLARITY PURPOSES ONLY. INSTALL AT THE BACK OF CURB, FRONT OF WALK, BACK OF WALK, OR ADJACENT TO OTHER HARDSCAPES TO FACILITATE FUTURE LOCATION AND TO PROTECT FROM DAMAGE. ENSURE MAINLINE IS INSTALLED ACCORDING TO THE IRRIGATION SPECIFICATIONS AND DETAILS.
5. IF IT IS NECESSARY TO HAVE PIPING UNDER HARDSCAPE ITEMS, SUCH AS ROADS, WALKS AND PATIOS, THE PIPES MUST BE SLEEVED USING SCH 40 PVC WITH THE SLEEVE DIAMETER BEING AT LEAST TWICE THE SIZE OF THE PIPE IT IS CARRYING.
5. CONTRACTOR SHALL BE RESPONSIBLE FOR REPLACING TURF AREAS AS NECESSARY THAT HAS BEEN DAMAGED BY IRRIGATION SYSTEM INSTALLATION.
6. CONTRACTOR SHALL REPAIR AND REPLACE PAVEMENT REMOVED OR DAMAGED FOR IRRIGATION SLEEVING, REFER TO DETAIL SD-27, SHEET L1.05.
7. ALL SYSTEM COMPONENTS TO COMPLY WITH RECLAIMED WATER IDENTIFICATION REQUIREMENTS FOR FUTURE CONNECTION. PROPERLY MARK/IDENTIFY ALL PIPING, VALVES, SPRINKLER HEADS, VALVE BOXES, CONTROLLERS, AND IRRIGATED AREAS. COLOR CODE USING 'PANTONE PURPLE', AS REQUIRED.

811 KNOW WHAT'S BELOW ALWAYS CALL 811 BEFORE YOU DIG
It's fast. It's free. It's the law.
www.callsunshine.com

GRAPHIC SCALE
0 10 20 40
1 INCH = 20 FEET

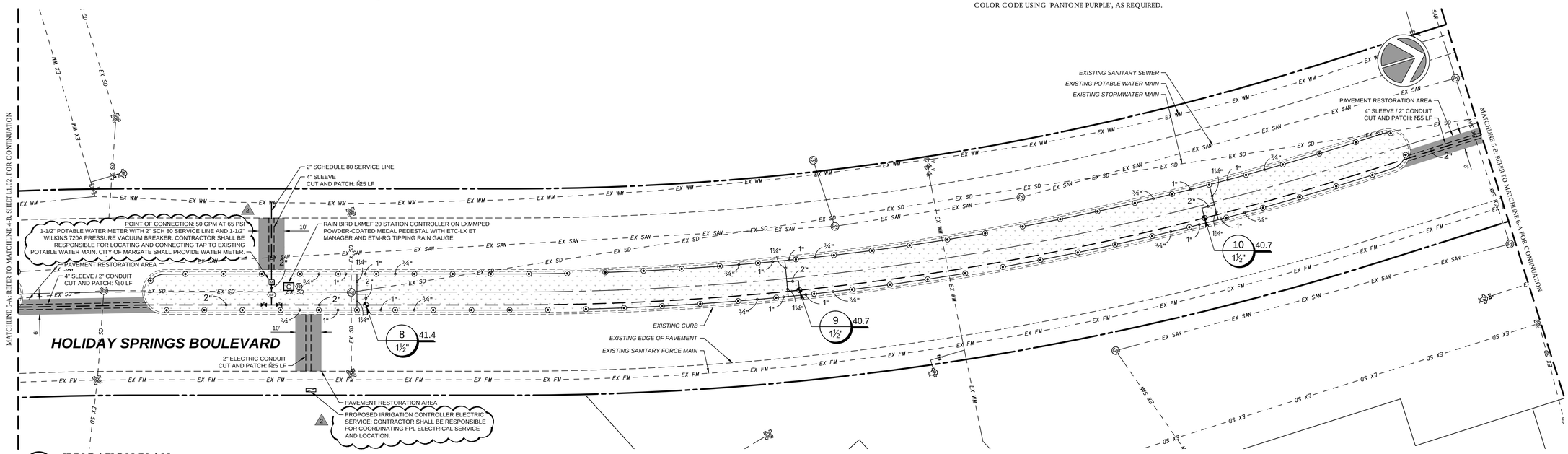

5 IRRIGATION PLAN
1" = 20'-0"

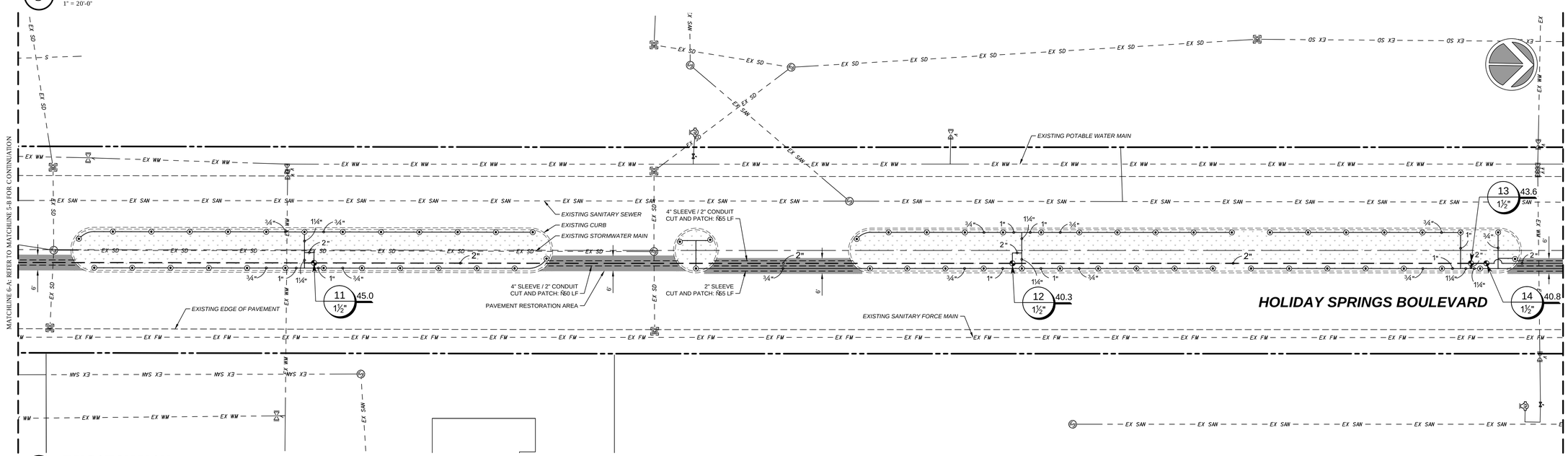

6 IRRIGATION PLAN
1" = 20'-0"

CHEN•MOORE &ASSOCIATES
Civil & Environmental Engineers, Landscape Architects and Planners
Your trusted Advisor for Infrastructure and Planning Needs for 25 Years
500 West Cypress Creek Road • Suite 630
Fort Lauderdale, FL • 33309
(954) 730-0707
www.chenmoore.com
CERTIFICATES OF AUTHORIZATION
EB0004593 LC26000425
Fort Lauderdale • Miami • West Palm Beach • North Central Florida • Treasure Coast

CLIENT:
CITY OF MARGATE, FLORIDA
PARKS AND RECREATION
6199 NW 10th Street
Margate, FL • 33063
(954) 972-6458
www.margatefl.com

PROJECT INFO:
HOLIDAY SPRINGS BOULEVARD MEDIAN IRRIGATION
MARGATE, FLORIDA
FOR: CITY OF MARGATE, FLORIDA

SEAL:

CRISTOBAL BETANCOURT, RLA
FLORIDA REG.# 6666941

NO.	DATE	REVISION
1	11/6/15	GIS/PLAN UPDATES PER CITY COMMENTS
2	3/23/16	ADDENDUM 1 PER CITY COMMENTS

MSB	MSB	CAB
DES.	DWN.	CHK.

100% CONSTRUCTION DOCUMENTS
088.004 | 2014-07-22
IRRIGATION PLAN
L1.03

V:\ PROJECTS \ 2014 \ 14-088.004 - HOLIDAY SPRINGS BLVD IRRIGATION \ DESIGN \ CAD \ 14-0088.004_IRR.DWG 3/23/16 by SBOREAK

IRRIGATION LEGEND

SYMBOL	MANUFACTURER/MODEL	RADIUS
◁	Rain Bird RD-06-S-P30-F-NP 15 Strip Series	4'x15'
◁	Rain Bird RD-06-S-P30-F-NP 15 Strip Series	4'x30'
⊙	Rain Bird RD-06-S-P30-F-NP HE-VAN-10	10'
⊙	Rain Bird RD-06-S-P30-F-NP HE-VAN-15	15'

SYMBOL	MANUFACTURER/MODEL
◔	Rain Bird PESBR-PRS-D 1-1/2"
⧗	Nibco T-113 2"
BF	Wilkins 720A 1-1/2"

SYMBOL	MANUFACTURER/MODEL
C	Rain Bird ESP8LXMEF-LXMMPED with 3 ESPLXMSM4
R	Rain Bird ETC-LX with ETM-RG
M	Water Meter 1-1/2"
———	Irrigation Lateral Line: PVC Class 200 SDR 21
— — —	Irrigation Mainline: PVC Class 200 SDR 21
- - - -	Pipe Sleeve: PVC Schedule 40

Valve Callout

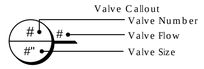

GENERAL NOTES

1. SITE BASE INFORMATION AND UTILITY LOCATIONS GENERATED FROM PUBLICLY AVAILABLE AERIAL PHOTOGRAPHY AND GIS DATA. CONTRACTOR TO VERITY LOCATION OF ALL EXISTING UTILITIES, TREES, AND SITE FEATURES PRIOR TO CONSTRUCTION.
2. IT SHALL BE THE CONTRACTOR'S SOLE RESPONSIBILITY TO TAKE THE NECESSARY PRECAUTIONS TO ENSURE PROPER SAFETY AND WORKMANSHIP WHEN WORKING IN THE VICINITY OF EXISTING UTILITY LINES.
3. CONTRACTOR SHALL BE RESPONSIBLE TO COORDINATE WITH FPL ON ANY WORK IN THE VICINITY OF OVERHEAD OR UNDERGROUND POWER LINES.
4. CONTRACTOR SHALL VERIFY PROPER CLEARANCE BELOW EXISTING OVERHEAD POWER LINES PRIOR TO WORKING WITHIN THE VICINITY THE POWER LINES.
5. MAINLINE LOCATION, WHERE SHOWN, IS FOR GRAPHIC CLARITY PURPOSES ONLY. INSTALL AT THE BACK OF CURB, FRONT OF WALK, BACK OF WALK, OR ADJACENT TO OTHER HARDSCAPES TO FACILITATE FUTURE LOCATION AND TO PROTECT FROM DAMAGE. ENSURE MAINLINE IS INSTALLED ACCORDING TO THE IRRIGATION SPECIFICATIONS AND DETAILS.
5. IF IT IS NECESSARY TO HAVE PIPING UNDER HARDSCAPE ITEMS, SUCH AS ROADS, WALKS AND PATIOS, THE PIPES MUST BE SLEEVED USING SCH 40 PVC WITH THE SLEEVE DIAMETER BEING AT LEAST TWICE THE SIZE OF THE PIPE IT IS CARRYING.
5. CONTRACTOR SHALL BE RESPONSIBLE FOR REPLACING TURF AREAS AS NECESSARY THAT HAS BEEN DAMAGED BY IRRIGATION SYSTEM INSTALLATION.
6. CONTRACTOR SHALL REPAIR AND REPLACE PAVEMENT REMOVED OR DAMAGED FOR IRRIGATION SLEEVING, REFER TO DETAIL SD-27, SHEET L1.05.
7. ALL SYSTEM COMPONENTS TO COMPLY WITH RECLAIMED WATER IDENTIFICATION REQUIREMENTS FOR FUTURE CONNECTION. PROPERLY MARK/IDENTIFY ALL PIPING, VALVES, SPRINKLER HEADS, VALVE BOXES, CONTROLLERS, AND IRRIGATED AREAS. COLOR CODE USING 'PANTONE PURPLE', AS REQUIRED.

811 KNOW WHAT'S BELOW ALWAYS CALL 811 BEFORE YOU DIG
It's fast. It's free. It's the law.
www.callsunshine.com

GRAPHIC SCALE
0 10 20 40
1 INCH = 20 FEET

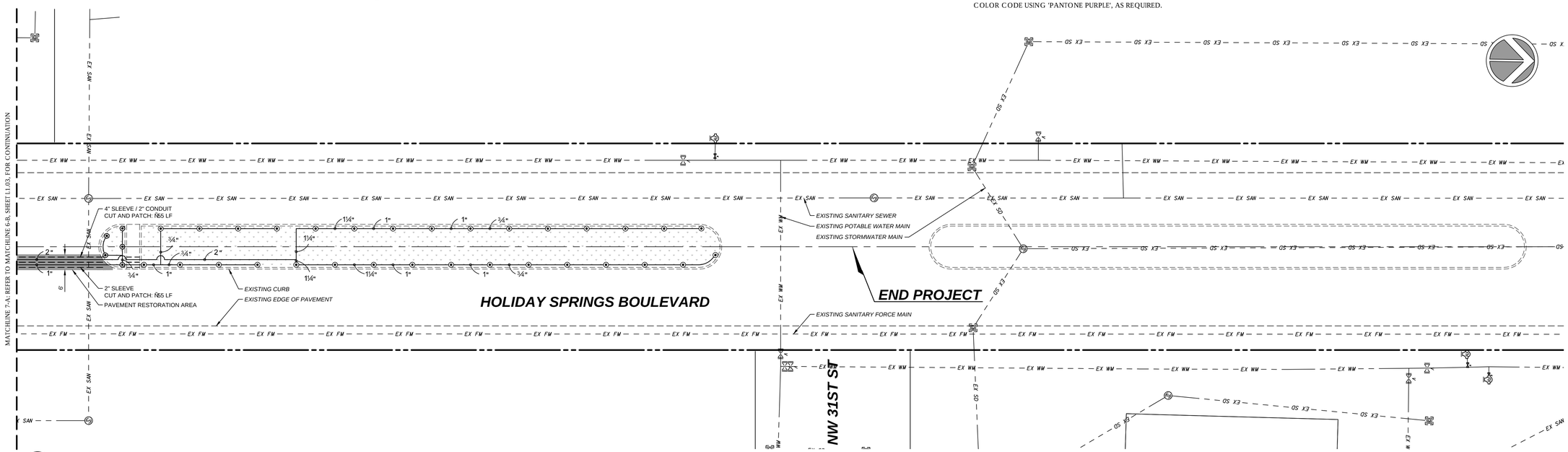

7 IRRIGATION PLAN
1" = 20'-0"

CHEN•MOORE &ASSOCIATES
Civil & Environmental Engineers, Landscape Architects and Planners
Your trusted Advisor for Infrastructure and Planning Needs for 25 Years
500 West Cypress Creek Road • Suite 630
Fort Lauderdale, FL • 33309
(954) 730-0707
www.chenmoore.com
Fort Lauderdale • Miami • West Palm Beach • North Central Florida • Treasure Coast
CERTIFICATES OF AUTHORIZATION
EB0004593 LC26000425

CLIENT:
CITY OF MARGATE, FLORIDA
PARKS AND RECREATION
6199 NW 10th Street
Margate, FL • 33063
(954) 972-6458
www.margatefl.com

PROJECT INFO:

HOLIDAY SPRINGS BOULEVARD MEDIAN IRRIGATION
MARGATE, FLORIDA
FOR: CITY OF MARGATE, FLORIDA

SEAL:

CRISTOBAL BETANCOURT, RLA
FLORIDA REG. # 6666941

NO.	DATE	REVISION
1	11/6/15	GIS/PLAN UPDATES PER CITY COMMENTS
2	3/23/16	ADDENDUM 1 PER CITY COMMENTS

MSB	MSB	CAB
DES.	DWN.	CHK.

100% CONSTRUCTION DOCUMENTS
088.004 | 2014-07-22
IRRIGATION PLAN
L1.04

V:\PROJECTS\2014\14-0088.004 - HOLIDAY SPRINGS BLVD IRRIGATION\DESIGN\CAD\14-0088.004_IRR.DWG 3/23/16 by SBORTAK

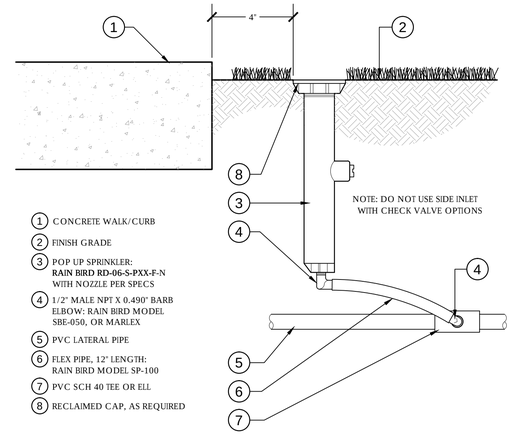

1. CONCRETE WALK/CURB
2. FINISH GRADE
3. POP UP SPRINKLER: **RAIN BIRD RD-06-S-PXX-F-N** WITH NOZZLE PER SPEC'S
4. 1/2" MALE NPT X 0.490" BARB ELBOW: RAIN BIRD MODEL SBE-050, OR MARLEX
5. PVC LATERAL PIPE
6. FLEX PIPE, 12" LENGTH: RAIN BIRD MODEL SP-100
7. PVC SCH 40 TEE OR ELL
8. RECLAIMED CAP, AS REQUIRED

1 6" POP-UP SPRAY

3" = 1'-0" 328403.13-03

1. 30-INCH LINEAR LENGTH OF WIRE, COILED
2. WATERPROOF CONNECTION (1 OF 2)
3. ZONE ID TAG
4. REMOTE CONTROL VALVE WITH PRESSURE REGULATOR
5. STANDARD VALVE BOX
6. PVC SCH 80 NIPPLE
7. PVC SCH 40 ELL
8. PVC SCH 40 TEE
9. PVC MAINLINE PIPE
10. PVC SCH 40 ADAPTER
11. 1/2" WIRE CLOTH GOPHER SCREEN WRAP ALL SIDES
12. BRICK (1 OF 4)
13. 6-INCH MINIMUM DEPTH 3/4" WASHED GRAVEL

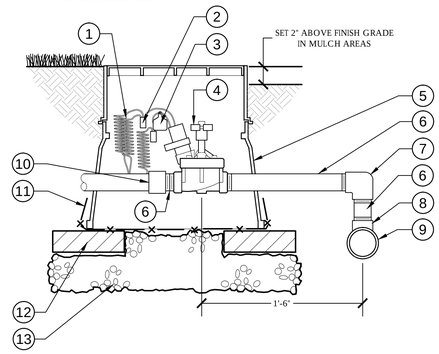

2 PRESSURE REGULATING REMOTE CONTROL VALVE

1 1/2" = 1'-0" 328406.13-11

1. FINISH GRADE
2. VALVE BOX
3. WIRE SCREEN CLOTH
4. BRICK (1 OF 4)
5. 6" DEPTH OF 3/4" MINUS GRAVEL
6. 3" ADS. SIZE AS REQUIRED
7. NIBCO T-113 BRASS GATE VALVE
8. PVC COUPLER AND SCHEDULE 80 TOE NIPPLE (EACH SIDE)

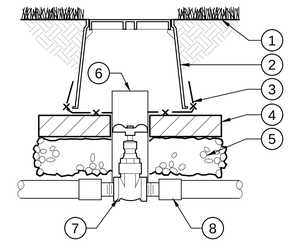

3 ISOLATION VALVE

1 1/2" = 1'-0" 328406.33-11

1. PRESSURE VACUUM BREAKER ASSEMBLY: WILKINS 720A OR EQUAL
2. GALVANIZED RISERS, LENGTH AS REQUIRED
3. GALVANIZED UNION
4. GALVANIZED ELL FITTINGS. PROVIDE THRUST BLOCK OR RESTRAINTS AS REQUIRED.
5. PVC SERVICE LINE PER SPECIFICATIONS
6. PVC COUPLER AND SCHEDULE 80 TOE NIPPLE (EACH SIDE)
7. PVC IRRIGATION MAINLINE PER SPECIFICATIONS
8. FINISH GRADE

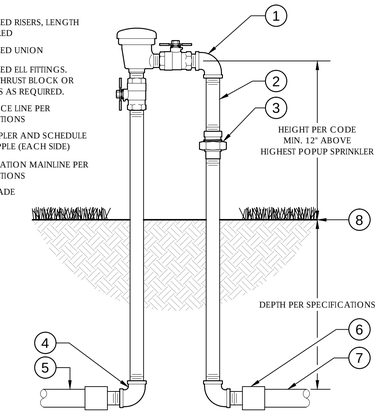

4 PRESSURE VACUUM BREAKER ASSEMBLY

1 1/2" = 1'-0" 328409.43-04

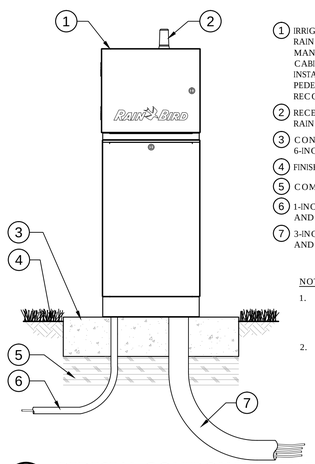

1. IRRIGATION CONTROLLER: RAIN BIRD ESP-LXME CONTROLLER WITH ET MANAGER CARTRIDGE IN LXMM METAL CABINET AND LXMMPED METAL PEDESTAL. INSTALL CONTROLLER, CABINET AND PEDESTAL PER MANUFACTURER'S RECOMMENDATIONS.
2. RECEIVER: RAIN BIRD ETCLX ET MANAGER CARTRIGE
3. CONCRETE PAD: 6-INCH MINIMUM THICKNESS
4. FINISH GRADE
5. COMPACTED SUBGRADE
6. 1-INCH SCH 40 PVC CONDUIT, FITTINGS AND SWEEP ELL FOR POWER SUPPLY
7. 3-INCH SCH 40 PVC CONDUIT, FITTINGS AND SWEEP ELL FOR STATION WIRES

NOTES:

1. PROVIDE PROPER GROUNDING COMPONENTS TO ACHIEVE GROUND RESISTANCE OF 10 OHMS OR LESS.
2. CONTRACTOR SHALL CONFIGURE ET MANAGER AND SCHEDULING SOFTWARE.

5 PEDESTAL CONTROLLER WITH ET MANAGER

3/4" = 1'-0" 32 8409.16-25

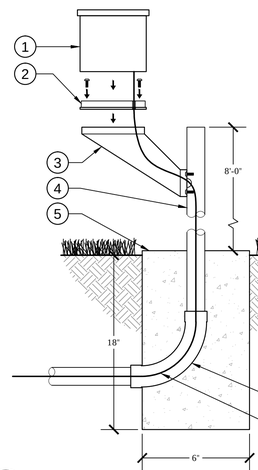

1. TIPPING RAIN GAUGE: RAIN BIRD ETM-RG
2. RAIN GAUGE MOUNTING PLATE
3. GALVANIZED STEEL BRACKET WITH HARDWARE
4. 1" SCH 40 GALVANIZED PIPE, 8' HT
5. CONCRETE FOOTER
6. SCH 40 PVC SWEEP ELL AND PVC CONDUIT TO CONTROLLER
7. SENSOR WIRE TO CONTROLLER

NOTE:

1. MOUNTING PLATE AND UV RESISTANT WIRE INCLUDED WITH TIPPING RAIN GAUGE. ALL MOUNTING HARDWARE AND BRACKET TO BE PROVIDED BY CONTRACTOR.
2. MOUNT WHERE DEVICE WILL BE EXPOSED TO UNOBSTRUCTED RAINFALL, BUT NOT IN PATH OF SPRINKLER SPRAY.

6 TIPPING RAIN GAUGE - POLE MOUNT

3" = 1'-0" 32 8409.83-03

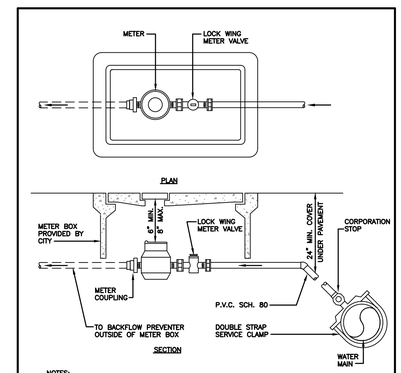

NOTES:

1. LOCATE BOX 12" OUTSIDE OF STREET R/W LINE.
2. CITY RESPONSIBILITY ENDS AT CUSTOMER SIDE OF METER.
3. METERS UP TO 2" SHALL BE FURNISHED AND INSTALLED BY CITY. (ALL OTHER WORK BY CUSTOMER)

DRAWN BY: JJW	SCALE: NONE	
APPROVED BY:	REV. FEB. 2002	
CITY OF MARGATE	STANDARD WATER AND SEWER DETAILS	
DEPT. OF ENVIRONMENTAL & ENGINEERING SERVICES	METER INSTALLATION FOR 1 1/2"	SD-3

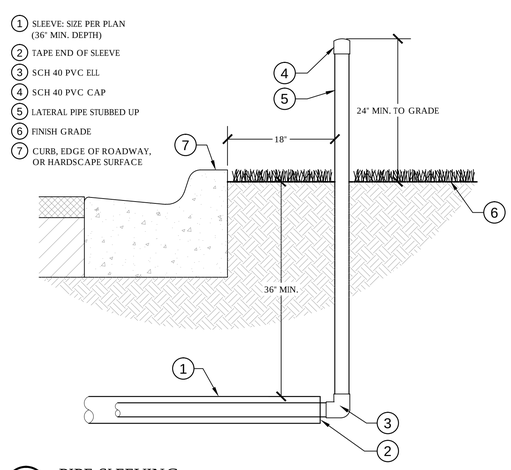

1. SLEEVE: SIZE PER PLAN (36" MIN. DEPTH)
2. TAPE END OF SLEEVE
3. SCH 40 PVC ELL
4. SCH 40 PVC CAP
5. LATERAL PIPE STUBBED UP
6. FINISH GRADE
7. CURB, EDGE OF ROADWAY, OR HARDSCAPE SURFACE

7 PIPE SLEEVING

1" = 1'-0" 328409.76-32

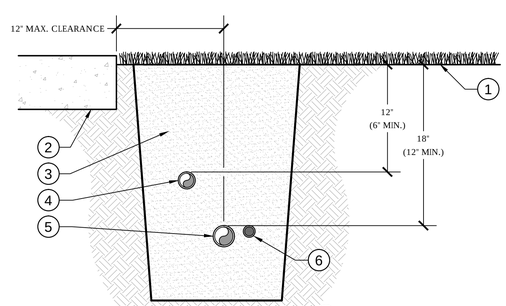

NOTE:

- FIELD ADJUST PIPING AS NECESSARY TO AVOID CONFLICT WITH DRAINAGE STRUCTURES, UTILITIES, AND PLANTINGS.
- REFER TO FLORIDA BUILDING CODE APPENDIX F FOR MINIMUM PIPE DEPTH OF COVER.
- WHERE MINIMUM PIPE DEPTH OF COVER IS NOT POSSIBLE, PIPE SLEEVING SHALL BE NECESSARY TO PROTECT PIPE IN SHALLOW AREAS.

1. FINISH GRADE
2. CURB, EDGE OF ROADWAY, OR HARDSCAPE SURFACE
3. BACKFILL PER IRRIGATION SPECIFICATIONS
4. IRRIGATION LATERAL PIPE (AS SPECIFIED) 12" DEPTH, 6" MINIMUM DEPTH
5. IRRIGATION MAINLINE PIPE (AS SPECIFIED) 18" DEPTH, 12" MINIMUM DEPTH
6. LOW VOLTAGE IRRIGATION CONTROL WIRE IN SCHEDULE 40 PVC CONDUIT (SIZE AS REQUIRED)

8 MAINLINE AND LATERAL PIPING

1 1/2" = 1'-0" 328409.76-37

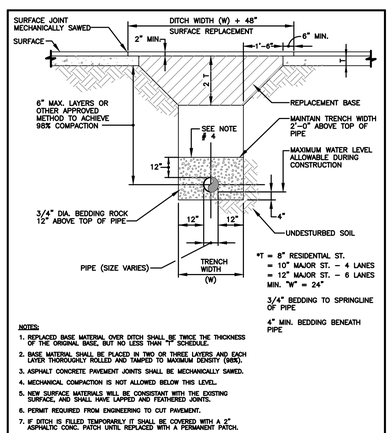

NOTES:

1. REPLACED BASE MATERIAL OVER DITCH SHALL BE TWICE THE THICKNESS OF THE ORIGINAL BASE, BUT NO LESS THAN "T" SCHEDULE.
2. BASE MATERIAL SHALL BE PLACED IN TWO OR THREE LAYERS AND EACH LAYER THOROUGHLY ROLLED AND TAMPED TO MAXIMUM DENSITY (98%).
3. ASPHALT CONCRETE PAVEMENT JOINTS SHALL BE MECHANICALLY SAWED.
4. MECHANICAL COMPACTION IS NOT ALLOWED BELOW THIS LEVEL.
5. NEW SURFACE MATERIALS WILL BE CONSISTANT WITH THE EXISTING SURFACE, AND SHALL HAVE LAPPED AND FEATHERED JOINTS.
6. PERMIT REQUIRED FROM ENGINEERING TO CUT PAVEMENT.
7. IF DITCH IS FILLED TEMPORARILY IT SHALL BE COVERED WITH A 2" ASPHALTIC CONC. PATCH UNTIL REPLACED WITH A PERMANENT PATCH.

DRAWN BY: JJW	SCALE: NONE	
APPROVED BY:	REV. JAN. 2010	
CITY OF MARGATE	STANDARD DETAILS	
DEPT. OF ENVIRONMENTAL & ENGINEERING SERVICES	TRENCH DETAIL	SD-28

IRRIGATION SCHEDULE

SYMBOL	MANUFACTURER/MODEL/DESCRIPTION	QTY	ARC	PSI	GPM	RADIUS
	Rain Bird RD-06-S-P30-F-NP 15 Strip Series 6" pop-up, with 30 psi in-stem pressure regulation, check valve, flow-shield, and non-potable cover.	4	LCS	30	0.49	4'x15'
	Rain Bird RD-06-S-P30-F-NP 15 Strip Series 6" pop-up, with 30 psi in-stem pressure regulation, check valve, flow-shield, and non-potable cover.	49	SST	30	1.21	4'x30'
	Rain Bird RD-06-S-P30-F-NP HE-VAN-10 6" pop-up, with 30 psi in-stem pressure regulation, check valve, flow-shield, and non-potable cover.	34	Ñ180ì	30	Ñ0.89	10'
	Rain Bird RD-06-S-P30-F-NP HE-VAN-15 6" pop-up, with 30 psi in-stem pressure regulation, check valve, flow-shield, and non-potable cover.	273	Ñ180ì	30	Ñ1.85	15'

SYMBOL	MANUFACTURER/MODEL/DESCRIPTION	QTY
	Rain Bird PESBR-PRS-D 1-1/2" Chlorine-resistant remote control valve with scrubber mechanism, purple flow control handle, and pressure regulator module.	14
	Nibco T-113 2" Class 125 bronze gate shut off valve with wheel handle.	2
BF	Wilkins 720A 1-1/2" Pressure vacuum breaker.	1
C	Rain Bird ESP8LXMEF-LXMMPED with 3 ESPLXMSM4 20 station module controller with flow sensing and water management capabilities, mounted on a powder-coated metal pedestal.	1
R	Rain Bird ETC-LX with ETM-RG ET manager cartridge with tipping rain gauge. Contractor to include 2 year subscription service.	1
M	Water Meter 1-1/2" 2" Schedule 80 PVC Service. 50 GPM at 65 PSI.	1
	Irrigation Lateral Line: PVC Class 200 SDR 21 PVC Class 200 irrigation pipe.	6,400 l.f.
	Irrigation Mainline: PVC Class 200 SDR 21 PVC Class 200 irrigation pipe.	3,000 l.f.
	Pipe Sleeve: PVC Schedule 40 Typical pipe sleeve for irrigation pipe. Pipe sleeve size shall allow for irrigation piping and their related couplings to easily slide through sleeving material. Extend sleeves 18 inches beyond edges of paving or construction.	1,000 l.f.

Valve Callout

- Valve Number
- Valve Flow
- Valve Size

CHEN•MOORE &ASSOCIATES
Civil & Environmental Engineers, Landscape Architects and Planners
Your trusted Advisor for Infrastructure and Planning Needs for 25 Years
500 West Cypress Creek Road • Suite 630
Fort Lauderdale, FL • 33309
(954) 730-0707
www.chenmoore.com
CERTIFICATES OF AUTHORIZATION EB0004593 LC26000425
Fort Lauderdale • Miami • West Palm Beach • North Central Florida • Treasure Coast

CLIENT:

CITY OF MARGATE, FLORIDA
PARKS AND RECREATION
6199 NW 10th Street
Margate, FL • 33063
(954) 972-6458
www.margatefl.com

PROJECT INFO:

HOLIDAY SPRINGS BOULEVARD MEDIAN IRRIGATION
MARGATE, FLORIDA
FOR: CITY OF MARGATE, FLORIDA

SEAL:

CRISTOBAL BETANCOURT, RLA
FLORIDA REG.# 6666941

NO.	DATE	REVISION
1	11/6/15	GIS/PLAN UPDATES PER CITY COMMENTS
2	3/23/16	ADDENDUM 1 PER CITY COMMENTS

MSB	MSB	CAB
DES.	DWN.	CHK.

100% CONSTRUCTION DOCUMENTS

088.004 | 2014-07-22

IRRIGATION DETAILS

L1.05

V:\PROJECTS\2014\14-088.004 - HOLIDAY SPRINGS BLVD IRRIGATION\DESIGN\CAD\14-00088.004_IRR.DWG 3/23/16 by SBORTAK

IRRIGATION SPECIFICATIONS

1. GENERAL

1.1. THE SYSTEM HAS BEEN DESIGNED TO CONFORM WITH THE REQUIREMENTS OF ALL APPLICABLE CODES. SHOULD ANY CONFLICT EXIST, THE REQUIREMENTS OF THE CODES SHALL PREVAIL. IT IS THE RESPONSIBILITY OF THE OWNER/INSTALLATION CONTRACTOR TO INSURE THE ENTIRE SYSTEM IS INSTALLED ACCORDING TO ALL APPLICABLE LAWS, RULES, REGULATIONS AND CONVENTIONS. IRRIGATION CONTRACTOR IS RESPONSIBLE FOR OBTAINING ALL REQUIRED PERMITS ACCORDING TO FEDERAL, STATE AND LOCAL LAWS.

1.2. CONTRACTOR TO VERIFY LOCATION OF ALL EXISTING UTILITIES.

1.3. IT SHALL BE THE CONTRACTOR'S SOLE RESPONSIBILITY TO TAKE THE NECESSARY PRECAUTIONS TO ENSURE PROPER SAFETY AND WORKMANSHIP WHEN WORKING IN THE VICINITY OF EXISTING UTILITY LINES.

1.4. CONTRACTOR SHALL BE RESPONSIBLE TO COORDINATE AND VERIFY PROPER CLEARANCE WITH FPL ON ANY WORK IN THE VICINITY OF OVERHEAD OR UNDERGROUND POWER LINES.

1.5. THE CONTRACTOR MUST SUBMIT FOR APPROVAL, PRIOR TO INSTALLATION, COPIES OF THE MANUFACTURER'S CUT SHEETS/SPECIFICATIONS FOR ALL COMPONENTS TO BE USED IN THE IRRIGATION SYSTEM.

1.6. THE IRRIGATION CONTRACTOR SHALL BE CERTIFIED AS A CERTIFIED IRRIGATION CONTRACTOR BY THE IRRIGATION ASSOCIATION. THE CERTIFICATION SHALL BE CURRENT AND IN GOOD STANDING.

2. SCOPE OF WORK

2.1. THE WORK SPECIFIED IN THIS SECTION CONSISTS OF FURNISHING ALL COMPONENTS NECESSARY FOR THE INSTALLATION, TESTING, AND DELIVERY OF A COMPLETE, FULLY FUNCTIONAL AUTOMATIC LANDSCAPE IRRIGATION SYSTEM THAT COMPLETELY COMPLIES WITH THE 100% IRRIGATION PLANS, SPECIFICATIONS, NOTES, DETAILS AND ALL APPLICABLE LAWS, REGULATIONS, CODES AND ORDINANCES. THIS WORK SHALL INCLUDE, BUT NOT BE LIMITED TO, THE PROVIDING OF ALL REQUIRED MATERIAL (PIPE, VALVES, FITTINGS, CONTROLLERS, WIRE, PRIMER, GLUE, ETC.), LAYOUT, PROTECTION OF THE PUBLIC, EXCAVATION, ASSEMBLY, INSTALLATION, BACK FILLING, COMPACTING, REPAIR OF ROAD SURFACES, CONTROLLER AND LOW VOLTAGE FEEDS TO VALVES, CLEANUP, MAINTENANCE, GUARANTEE AND AS-BUILT PLANS.

2.2. ALL IRRIGATED AREAS SHALL PROVIDE 100% HEAD-TO-HEAD COVERAGE FROM A FULLY AUTOMATIC IRRIGATION SYSTEM WITH A RAIN SENSOR AS SHOWN. THE RAIN SENSOR SHALL BE INSTALLED TO PREVENT ITS ACTIVATION BY ADJACENT HEADS. ALL WATERING PROCEDURES SHALL CONFORM TO LOCAL CODES, AS WELL AS THIS PROJECT'S REGIONAL WATER MANAGEMENT DISTRICT RESTRICTIONS AND REGULATIONS. ZONES ARE PRIORITIZED FIRST BY PUBLIC SAFETY AND THEN BY HYDRAULIC CONCERNS. THIS SEQUENCING WILL BE A MANDATORY PUNCH LIST ITEM. THESE PLANS HAVE BEEN DESIGNED TO SATISFY/EXCEED THE FLORIDA BUILDING CODE (FBC) APPENDIX F AND THE FLORIDA IRRIGATION SOCIETY STANDARDS AND SPECIFICATIONS FOR TURF AND LANDSCAPE IRRIGATION SYSTEMS, FOURTH EDITION.

2.3. CONTRACTOR SHALL VERIFY THE LOCATION OF ALL UNDERGROUND UTILITIES 72 HOURS PRIOR TO COMMENCEMENT OF WORK.

2.4. IT IS THE RESPONSIBILITY OF THE IRRIGATION CONTRACTOR TO FAMILIARIZE THEMSELVES WITH ALL GRADE DIFFERENCES, LOCATION OF WALLS, RETAINING WALLS, STRUCTURES AND UTILITIES. DO NOT WILLFULLY INSTALL THE SPRINKLER SYSTEM AS SHOWN ON THE DRAWINGS WHEN IT IS OBVIOUS IN THE FIELD THAT UNKNOWN OBSTRUCTION, GRADE DIFFERENCES OR DIFFERENCES IN THE AREA DIMENSIONS EXIST THAT MIGHT NOT HAVE BEEN CONSIDERED IN THE DESIGN. SUCH OBSTRUCTIONS, OR DIFFERENCES, SHOULD BE BROUGHT TO THE ATTENTION OF THE OWNER' AUTHORIZED REPRESENTATIVE. IN THE EVENT THIS NOTIFICATION IS NOT PERFORMED, THE IRRIGATION CONTRACTOR SHALL ASSUME FULL RESPONSIBILITY FOR ANY REVISIONS NECESSARY.

2.5. IRRIGATION CONTRACTOR SHALL REPAIR OR REPLACE ALL EXISTING SITE ITEMS DAMAGED BY THEIR WORK. IRRIGATION CONTRACTOR SHALL COORDINATE THEIR WORK WITH OTHER CONTRACTORS FOR THE LOCATION AND INSTALLATION OF PIPE SLEEVES AND LATERALS THROUGH WALLS, UNDER ROADWAYS AND PAVING, ETC.

2.6. THE CONTRACTOR SHALL TAKE IMMEDIATE STEPS TO REPAIR, REPLACE, OR RESTORE ALL SERVICES TO ANY UTILITIES WHICH ARE DISRUPTED DUE TO THEIR OPERATIONS. ALL COSTS INVOLVED IN DISRUPTION OF SERVICE AND REPAIRS DUE TO NEGLIGENCE ON THE PART OF THE CONTRACTOR SHALL BE THE CONTRACTOR'S RESPONSIBILITY.

3. SUBMITTALS

3.1. THE CONTRACTOR SHALL PROVIDE FOR APPROVAL PRIOR TO INSTALLATION, MANUFACTURER&S PRODUCT DESCRIPTION SHEETS/SPECIFICATIONS FOR ALL MAJOR COMPONENTS OF THE IRRIGATION SYSTEM. MODEL NUMBERS SHALL BE HIGHLIGHTED OR CIRCLED.

3.2. NO SUBSTITUTIONS OR DEVIATIONS FROM THE SPECIFIED BRANDS, MODELS, OR SIZES SHALL BE PERMITTED, EXCEPT WITH WRITTEN APPROVAL FROM THE LANDSCAPE ARCHITECT OF RECORD.

3.3. ANY MAJOR DESIGN CHANGES SHALL BE BROUGHT TO THE ATTENTION OF THE LANDSCAPE ARCHITECT OF RECORD PRIOR TO CONSTRUCTION; CONTRACTOR PROCEEDS WITH CHANGES AT OWN RISK. DESIGN CHANGES, SUBSTITUTIONS, OR DEVIATIONS NOT APPROVED BY THE LANDSCAPE ARCHITECT OF RECORD WILL RESULT IN REJECTION AND REPLACEMENT OF MATERIALS AT NO ADDITIONAL COST TO THE OWNER.

4. PERMITTING

4.1. CONTRACTOR SHALL OBTAIN AN ENGINEERING PERMIT FROM THE CITY OF MARGATE FOR ANY WORK COMPLETED IN CITY RIGHT-OF-WAY.

4.2. CONTRACTOR SHALL OBTAIN A BUILDING PERMIT FROM THE CITY OF MARGATE FOR IRRIGATION AND ELECTRICAL WORK.

5. POST CONSTRUCTION DOCUMENTATION

5.1. DOCUMENTATION:

5.1.1. PROVIDE THE MANUFACTURERS& RECOMMENDED OPERATING INSTRUCTIONS FOR ALL MAJOR COMPONENTS INCORPORATED INTO THE IRRIGATION SYSTEM.

5.1.2. PROVIDE SYSTEM OPERATION MANUALS, MAINTENANCE SCHEDULES, RECOMMENDED SCHEDULE OF OPERATION INCLUDED AVERAGE APPLICATION RATES WITH SEASONAL ADJUSTMENTS FOR EACH ZONE.

5.1.3. PROVIDE ALL REQUIRED TESTING AND INSPECTION CERTIFICATES TO THE OWNER OR OWNER&S REPRESENTATIVE

5.2. AS-BUILT DRAWINGS: PROVIDE RECORD DRAWINGS AND PLANS SHOWING ALL CHANGES IN THE DESIGN TO INDICATE THE ACTUAL INSTALLATION AND LOCATION OF ALL EQUIPMENT AND MATERIALS. THE FOLLOWING SPECIFIC ITEMS MUST BE INCLUDED:

5.2.1. LOCATION AND SIZE OF MAINLINE PIPING, LATERAL PIPING, AND PIPE SLEEVING.

5.2.2. ISOLATION VALVES

5.2.3. REMOTE CONTROL VALVE LOCATIONS, SIZES, NUMBER, AND AREA OF COVERAGE SHOWN USING DIFFERENT COLORS.

5.2.4. SPLICE BOXES AND LOW VOLTAGE WIRING PATH.

5.2.5. CONTROLLER AND RAIN SHUTOFF DEVICES.

5.2.6. POINT OF CONNECTION INCLUDING THE TYPE OF WATER SOURCE, SIZE, FLOW RATE, AND OPERATING PRESSURE.

5.2.7. DATE AND SCALE.

5.2.8. CONTRACTOR&S NAME, ADDRESS, AND TELEPHONE NUMBER.

5.2.9. THE AS-BUILT DRAWINGS SHALL BE SIGNED BY A FLORIDA REGISTERED LANDSCAPE ARCHITECT OR PROFESSIONAL ENGINEER.

5.3. CONTRACTOR SHALL FURNISH FIVE EXTRA UNITS OF EACH TYPE OF POPUP SPRAY AND EMITTER THAT MATCH PRODUCTS INSTALLED AND THAT ARE PACKAGED WITH PROTECTIVE COVERING FOR STORAGE AND IDENTIFIED WITH LABELS DESCRIBING CONTENTS. INCLUDE TOOLS TO SERVICE THESE PRODUCTS.

6. FINAL ACCEPTANCE

6.1. FINAL ACCEPTANCE OF THE IRRIGATION SYSTEM WILL BE GIVEN AFTER THE FOLLOWING DOCUMENTS AND CONDITIONS HAVE BEEN COMPLETED AND APPROVED. FINAL PAYMENT WILL NOT BE RELEASED UNTIL THESE CONDITIONS ARE SATISFIED.

6.1.1. FINAL WALK-THRU AND CORRECTION OF ALL PUNCH LIST ITEMS.

6.1.2. COMPLETION AND ACCEPTANCE OF AS-BUILT RECORD DRAWINGS.

6.1.3. TURNOVER OF ALL REQUIRED PARTS AND TOOLS AS OUTLINED IN THE PROJECT SPECIFICATIONS.

7. GUARANTEE

7.1. FULLY WARRANT THE LANDSCAPE IRRIGATION SYSTEM FOR A PERIOD OF ONE (1) YEAR AFTER THE WRITTEN FINAL ACCEPTANCE.

7.2. DURING THE WARRANTY PERIOD, ENFORCE MANUFACTURER'S AND SUPPLIER'S WARRANTIES. MALFUNCTIONS, DEFICIENCIES, BREAKS, DAMAGES, DISREPAIR OR OTHER DISORDERS DUE TO MATERIALS, WORKMANSHIP, OR INSTALLATION BY THE CONTRACTOR AND HIS SUPPLIERS SHALL BE IMMEDIATELY AND PROPERLY CORRECTED.

7.3. REPAIR DAMAGES PROMPTLY WHICH ARE CAUSED BY SYSTEM MALFUNCTION.

8. POINT OF CONNECTION (P.O.C.)

8.1. THE POINT OF CONNECTION (P.O.C.) IS A PROPOSED 1-1/2" WATER METER WITH A 2" SCHEDULE 80 SERVICE LINE, UTILIZING AN EXISTING POTABLE WATER MAIN. THE P.O.C. MUST BE CAPABLE OF DELIVERING A MINIMUM OF 50 GPM AT 65 PSI. CONTRACTOR SHALL VERIFY THESE MINIMUM CONDITIONS CAN BE MET PRIOR TO BEGINNING IRRIGATION SYSTEM INSTALLATION.

8.2. IF THE CONDITIONS CAN NOT BE MET, THE CONTRACTOR MUST NOTIFY THE DESIGNER PRIOR TO PROCEEDING WITH THE WORK. IF THE CONTRACTOR DOES NOT DO SO, THE CONTRACTOR PROCEEDS AT THEIR OWN RISK AND BECOMES RESPONSIBLE FOR ANY FUTURE WORK REQUIRED TO MAKE THE SYSTEM PERFORM AS REQUIRED.

9. PIPING

9.1. MAINLINE PIPE: PVC CLASS 200 SDR 21, NON-GASKETED, SOLVENT WELD, WITH SCHEDULE 40 PVC FITTINGS.

9.2. LATERAL PIPE: PVC CLASS 200 SDR 21, NON-GASKETED, SOLVENT WELD, WITH SCHEDULE 40 PVC FITTINGS.

9.3. THREADED PIPE: PVC SCHEDULE 80.

9.4. PIPE LOCATIONS SHOWN ON THE PLAN ARE SCHEMATIC AND SHALL BE ADJUSTED IN THE FIELD. WHEN LAYING OUT MAINLINES PLACE A MAXIMUM OF 12" AWAY FROM EITHER THE BACK OF CURB, FRONT OF WALK, BACK OF WALK, OR OTHER HARDSCAPE TO ALLOW FOR EASE IN LOCATING AND PROTECTION FROM PHYSICAL DAMAGE. INSTALL ALL LATERAL PIPE NEAR EDGES OF PAVEMENT OR AGAINST BUILDINGS WHENEVER POSSIBLE TO ALLOW SPACE FOR PLANT ROOT BALLS. ALWAYS INSTALL PIPING INSIDE PROJECT PROPERTY BOUNDARY.

9.5. PIPES SHALL ALWAYS BE PLACED IN PLANTING BEDS. IF IT IS NECESSARY TO HAVE PIPING UNDER HARDSCAPES, SUCH AS ROADS, WALKS, AND PATIOS, THE PIPES MUST BE SLEEVED USING SCH 40 PVC WITH THE SLEEVE DIAMETER BEING TWICE THE SIZE OF THE PIPE IT IS CARRYING WITH A MINIMUM SLEEVE SIZE OF 2".

9.6. PIPE SIZES SHALL CONFORM TO THOSE SHOWN ON THE DRAWINGS. NO SUBSTITUTIONS OF SMALLER PIPE SIZES SHALL BE PERMITTED, BUT SUBSTITUTIONS OF LARGER SIZES MAY BE APPROVED. ALL DAMAGED AND REJECTED PIPE SHALL BE REMOVED FROM THE SITE AT THE TIME OF SAID REJECTION.

9.7. CONTRACTOR TO ENSURE ALL MAINLINE PIPING IS PROPERLY RESTRAINED USING MECHANICAL JOINT FITTINGS, RESTRAINING COLLARS, THREADED RODS, THRUST BLOCKS, ETC., AS AND WHERE REQUIRED. CONTRACTOR SHALL REFER TO PIPE MANUFACTURER'S RECOMMENDED INSTALLATION PRACTICES FOR FURTHER DIRECTION.

9.8. PVC PIPE JOINT COMPOUND AND PRIMER: SLOW-DRYING, HEAVY DUTY CEMENT AND TINTED (PURPLE) PRIMER THAT IS COMPATIBLE WITH THE CEMENT. THE PVC CEMENT SHALL BE WELD-ON 2711 GREY AND THE PRIMER SHALL BE WELD-ON P70 PURPLE PRIMER, OR APPROVED EQUALS.

9.9. MAIN LINE PIPE DEPTH MEASURED TO THE TOP OF PIPE SHALL BE 18" MINIMUM, 36" MINIMUM AT VEHICULAR CROSSINGS.

9.10. LATERAL LINE DEPTHS MEASURED TO TOP OF PIPE SHALL BE 12" MINIMUM, 30" MINIMUM AT VEHICULAR CROSSINGS.

10. LAYOUT

10.1. LAY OUT IRRIGATION SYSTEM MAINLINES AND LATERAL LINES. MAKE THE NECESSARY ADJUSTMENTS AS REQUIRED TO TAKE INTO ACCOUNT ALL SITE OBSTRUCTIONS AND LIMITATIONS PRIOR TO EXCAVATING TRENCHES.

10.2. STAKE ALL SPRINKLER HEAD LOCATIONS. ADJUST LOCATION AND MAKE THE NECESSARY MODIFICATIONS TO NOZZLE TYPES, ETC. REQUIRED TO INSURE 100% HEAD TO HEAD COVERAGE. REFER TO THE EDGE OF PAVEMENT DETAIL ON THE IRRIGATION DETAIL SHEET.

10.3. SPRAY HEADS SHALL BE INSTALLED 4" FROM SIDEWALKS OR CURBED ROADWAYS AND 12" FROM UNCURBED ROADWAYS AND BUILDING FOUNDATIONS. ROTORS SHALL BE INSTALLED 4" FROM SIDEWALKS OR CURBED ROADWAYS, 12" FROM BUILDING FOUNDATIONS, AND 36" FROM UNCURBED ROADWAYS.

10.4. SHRUB HEADS SHALL BE INSTALLED ON 3/4" SCH 40 PVC RISERS. THE RISERS SHALL BE SET AT A MINIMUM OF 18" OFF SIDEWALKS, ROADWAY CURBING, BUILDING FOUNDATIONS, AND/OR ANY OTHER HARDSCAPED AREAS. SHRUB HEADS SHALL BE INSTALLED TO A STANDARD HEIGHT OF 4" BELOW MAINTAINED HEIGHT OF PLANTS AND SHALL BE INSTALLED WITHIN PLANTED MASSES TO BE LESS VISIBLE AND OFFER PROTECTION. PAINT ALL SHRUB RISERS WITH FLAT BLACK OR FOREST GREEN PAINT, UNLESS IRRIGATION SYSTEM WILL BE INSTALLED FROM A REUSE WATER SYSTEM WITH PURPLE PVC RISERS.

10.5. LOCATE VALVES PRIOR TO EXCAVATION. INSURE THAT THEIR LOCATION PROVIDES FOR EASY ACCESS AND THAT THERE IS NO INTERFERENCE WITH PHYSICAL STRUCTURES, PLANTS, TREES, POLES, ETC. VALVE BOXES MUST BE PLACED A MINIMUM OF 12" AND A MAXIMUM OF 15" FROM THE EDGE OF PAVEMENT, CURBS, ETC., AND THE TOP OF THE BOX MUST BE 2" ABOVE FINISH GRADE. NO VALVE BOXES SHALL BE INSTALLED IN TURF AREAS WITHOUT APPROVAL BY THE IRRIGATION DESIGNER; ONLY IN SHRUB BEDS. NEVER INSTALL VALVE BOXES WITHIN A SPORTS FIELD OR DESIGNATED PLAY AREA.

8. ELECTRICAL POWER SUPPLY

8.1. ELECTRICAL SUPPLY FOR PUMP AND CONTROLLER SHALL TO BE PROVIDED BY THE IRRIGATION CONTRACTOR. CONTRACTOR TO COORDINATE WITH LOCAL UTILITIES FOR THE INSTALLATION OF AND CONNECTION TO AVAILABLE SITE POWER SUPPLY FOR REQUIRED ELECTRICAL COMPONENTS AS SET FORTH IN THE 100% IRRIGATION PLANS.

8.2. ALL ELECTRICAL INSTALLATION TO COMPLY WITH THE NATIONAL ELECTRICAL CODE AND ANY AND ALL OTHER APPLICABLE ELECTRICAL CODES, LAWS AND REGULATIONS. A LICENSED ELECTRICIAN SHALL PERFORM ALL ELECTRICAL HOOK-UPS. POWER FOR THE CONTROLLER SHALL BE 120 VOLT, 20 AMP.

9. CONTROL WIRING

9.1. IRRIGATION CONTROL WIRE SHALL BE THERMOPLASTIC SOLID COPPER, SINGLE CONDUCTOR, LOW VOLTAGE IRRIGATION CONTROLLER WIRE SUITABLE FOR DIRECT BURIAL AND CONTINUOUS OPERATION AT RATED VOLTAGES.

9.2. ALL CONTROL WIRING SHALL BE PLACED IN PVC SCHEDULE 40 GRAY ELECTRICAL CONDUIT. AT TURNS IN DIRECTION UTILIZE JUNCTION BOXES.

9.3. TAPE AND BUNDLE CONTROL WIRES EVERY 10' AND RUN ADJACENT TO THE MAINLINE. AT ALL TURNS IN DIRECTION MAKE A 2' COIL OF WIRE. AT ALL VALVE BOXES COIL WIRE AROUND A 3/4" PIECE OF PVC PIPE TO MAKE A COIL USING 30 LINEAR INCHES OF WIRE. MAKE ELECTRICAL CONNECTIONS WITH 3M-DBY,DBR CONNECTORS.

9.4. NUMBER ALL WIRES USING AN ELECTRICAL BOOK OF NUMBERS ACCORDING TO THE PLANS. NUMBER WIRES IN ALL VALVE BOXES, JUNCTION BOXES AND AT THE CONTROLLER.

9.5. WIRE SIZED, NUMBERED AND COLORED AS FOLLOWS:

#12 WHITE FOR COMMON

#12 SPARE BLACK COMMON

#12 RED FOR HOT WIRES

#12 SPARE YELLOW HOT WIRE

10. CONTROLLER GROUNDING

10.1. CONTRACTOR TO UTILIZE 4"X8'X5/8" COPPER GROUNDING PLATES, 5/8"X10' COPPER CLAD GROUNDING RODS, 'ONE STRIKE' CAD WELLS AT ALL CONNECTION POINTS, #6 BARE COPPER WIRE, AND EARTH CONTACT MATERIAL. INSTALL THESE AND OTHER REQUIRED COMPONENTS AS OUTLINED IN THE DETAIL. CONTRACTOR TO VERIFY THAT THE EARTH TO GROUND RESISTANCE DOES NOT EXCEED 10 OHMS. CONTRACTOR SHALL PROVIDE A WRITTEN CERTIFICATION ON A LICENSED ELECTRICAL CONTRACTORS LETTER HEAD SHOWING THE DATE OF THE TEST, CONTROLLER LOCATION, AND TEST RESULTS. EACH CONTROLLER SHALL BE SO GROUNDED AND TESTED.

11. VALVES

11.1. SEQUENCE ALL VALVES SO THAT THE FARTHEST VALVE FROM THE P.O.C. OPERATES FIRST AND THE CLOSEST TO THE P.O.C. OPERATES LAST. THE CLOSEST VALVE TO THE P.O.C. SHOULD BE THE LAST VALVE IN THE PROGRAMMED SEQUENCE.

11.2. ADJUST THE FLOW CONTROL ON EACH RCV TO ENSURE SHUT OFF IN 10 SECONDS AFTER DEACTIVATION BY THE IRRIGATION CONTROLLER.

11.3. USING 3" HIGH NUMBER STENCILS, PAINT THE VALVE NUMBER IN WHITE ON THE LID OF EACH VALVE BOX.

12. EQUIPMENT

12.1. BUBBLERS SHALL BE INSTALLED USING SCH 80 NIPPLES AND SHALL BE PLACED AT THE BASE OF TREES FOR LOW LEVEL WATERING.

12.2. ALL POP-UP HEADS AND SHRUB RISERS SHALL BE PRESSURE COMPENSATING. ALL POP-UP HEADS SHALL BE MOUNTED ON FLEX-TYPE SWING JOINTS.

12.3. ALL SPRINKLER EQUIPMENT NOT OTHERWISE DETAILED OR SPECIFIED SHALL BE INSTALLED AS PER MANUFACTURER'S RECOMMENDATIONS AND SPECIFICATIONS, AND IN ACCORDANCE WITH LOCAL AND STATE LAWS.

13. SIGNAGE & MARKING

13.1. TO COMPLY WITH A FUTURE RECLAIMED WATER SOURCE, ALL SYSTEM COMPONENTS MUST BE PROPERLY MARKED AND IDENTIFIED AS NON-POTABLE TO PREVENT CROSS CONNECTION OF POTABLE AND NON-POTABLE SYSTEMS.

13.2. PROPERLY MARK AND IDENTIFY ALL PIPING, VALVES, SPRINKLER HEADS, VALVE BOXES, CONTROLLERS, AND IRRIGATED AREAS BY USING 'PANTONE PURPLE', AS REQUIRED. IN ADDITION TO COLOR CODING, SYSTEM COMPONENTS MUST INCLUDE THE TEXT: "DO NOT DRINK" IN ENGLISH AND SPANISH TOGETHER WITH THE EQUIVALENT STANDARD INTERNATIONAL SYMBOL. REFER TO 62-610.468, FAC.

14. TRENCHING

14.1. EXCAVATE STRAIGHT AND VERTICAL TRENCHES WITH SMOOTH, FLAT OR SLOPING BOTTOMS. TRENCH WIDTH AND DEPTH SHOULD BE SUFFICIENT TO ALLOW FOR THE PROPER VERTICAL AND HORIZONTAL SEPARATION BETWEEN PIPING AS SHOWN IN THE PIPE INSTALLATION DETAIL ON THE DETAIL SHEET.

14.2. PROTECT EXISTING LANDSCAPED AREAS. REMOVE AND REPLANT ANY DAMAGED PLANT MATERIAL UPON JOB COMPLETION. THE REPLACEMENT MATERIAL SHALL BE THE SAME GENUS, SPECIES, AND SIZE OF THE MATERIAL IT IS REPLACING. THE FINAL DETERMINATION AS TO WHAT NEEDS TO BE REPLACED AND THE ACCEPTABILITY OF THE REPLACEMENT MATERIAL SHALL BE SOLELY DETERMINED BY THE OWNER OR OWNER'S REPRESENTATIVE.

15. INSTALLATION

15.1. CUT ALL PIPE SQUARE AND DEBURR. CLEAN PIPE AND FITTINGS OF FOREIGN MATERIAL, THEN APPLY A SMALL AMOUNT OF PRIMER WHILE ENSURING THAT ANY EXCESS IS WIPED OFF IMMEDIATELY. PRIMER SHOULD NOT PUDDLE OR DRIP FROM PIPE OR FITTINGS. NEXT APPLY A THIN COAT OF PVC CEMENT. FIRST APPLY A THIN LAYER TO THE PIPE, THEN A THIN LAYER INSIDE THE FITTING, AND FINALLY ANOTHER VERY THIN LAYER ON THE PIPE. INSERT THE PIPE INTO THE FITTING. INSURE THAT THE PIPE IS INSERTED TO THE BOTTOM OF THE FITTING, THEN TURN THE PIPE A 1/4 TURN AND HOLD FOR 10 SECONDS. MAKE SURE THAT THE PIPE DOESN'T RECEDE FROM THE FITTING. IF THE PIPE ISN'T AT THE BOTTOM OF THE FITTING UPON COMPLETION, THE GLUE JOINT IS UNACCEPTABLE AND MUST BE DISCARDED.

15.2. PIPES MUST CURE A MINIMUM OF 30 MINUTES PRIOR TO HANDLING AND PLACING INTO TRENCHES. A LONGER CURING TIME MAY BE REQUIRED; REFER TO THE MANUFACTURER'S SPECIFICATIONS. THE PIPE MUST CURE A MINIMUM OF 24 HOURS PRIOR TO FILLING WITH WATER.

16. BACKFILLING

16.1. THE BACKFILL 6" BELOW AND 6" ABOVE ALL PIPING SHALL BE CLEAN SAND. ALL OTHER TRCNCH BACKFILL CAN BE NATIVE MATERIAL BUT SHALL NOT CONTAIN ANYTHING LARGER THAN 2" IN DIAMETER.

16.2. CONTRACTOR SHALL BACKFILL ALL PIPING, BOTH MAINLINE AND LATERALS, PRIOR TO PERFORMING ANY PRESSURE TESTS. THE PIPE SHALL BE BACKFILLED WITH THE EXCEPTION OF 2' ON EACH SIDE OF EVERY JOINT (BELL FITTINGS, 90'S, TEES, 45'S, ETC.). THESE JOINTS SHALL NOT BE BACKFILLED UNTIL ALL PIPING HAS SATISFACTORILY PASSED ITS APPROPRIATE PRESSURE TEST AS OUTLINED BELOW.

17. TESTING & FLUSHING

17.1. LEAKAGE TESTING

17.1.1. REMOVE ALL REMOTE CONTROL VALVES AND CAP USING A THREADED CAP. FILL MAINLINE WITH WATER AND PRESSURIZE THE SYSTEM TO 125 PSI. MONITOR THE SYSTEM PRESSURE AT TWO GAUGE LOCATIONS; THE GAUGE LOCATIONS MUST BE AT OPPOSITE ENDS OF THE MAINLINE. WITH THE SAME RESPECTIVE PRESSURES, MONITOR THE GAUGES FOR TWO HOURS.

17.1.2. PVC SOLVENT-WELD PIPE CONNECTIONS SHALL HAVE NO LEAKAGE. GASKETED PIPING SHALL LOSE NO MORE WATER THAN ALLOWED PER THE FLORIDA STATE BUILDING CODE, VOLUME II PLUMBING, PART VI, APPENDIX 'F'. REFER TO THIS SECTION FOR THE FORMULA TO BE USED TO CALCULATE THE MAXIMUM ALLOWABLE WATER LOSS DURING THE TESTING TIME.

17.1.3. REPAIR ALL LEAKS AND RETEST MAINLINE PIPING UNTIL THE TEST IS SUCCESSFUL.

17.1.4. LATERAL PIPE MUST BE FILLED AND VISUALLY CHECKED FOR LEAKS. ANY LEAKS DETECTED MUST BE REPAIRED. NO PRESSURE TEST OF THE LATERAL LINES IS REQUIRED.

17.2. FLUSHING:

17.2.1. PRIOR TO THE PLACEMENT OF HEADS, FLUSH ALL LINES FOR A MINIMUM OF 10 MINUTES OR UNTIL LINES ARE COMPLETELY CLEAN OF DEBRIS, WHICHEVER IS LONGER.

17.2.2. USE SCREENS IN HEADS AND ADJUST HEADS FOR PROPER COVERAGE AVOIDING EXCESS WATER ON WALLS, WALKS AND PAVING.

17.3. OPERATIONAL TESTING:

17.3.1. UPON COMPLETION OF BACKFILLING, FINISH GRADING AND CONTOURING, TEST THE ENTIRE SYSTEM FOR PROPER OPERATION, INCLUDING ELECTRICALLY ACTUATING THE REMOTE CONTROL VALVES. RUN EACH ZONE UNTIL WATER BEGINS TO PUDDLE OR RUN OFF. THIS WILL ALLOW DETERMINATION OF THE NUMBER OF IRRIGATION START TIMES NECESSARY TO MEET THE WEEKLY EVAPOTRANSPIRATION REQUIREMENTS OF THE PLANTING MATERIAL IN EACH ZONE. IN SANDY SOILS NO PUDDLING WILL OCCUR. IN THESE CASES, CALCULATE THE REQUIRED RUN TIMES.

17.3.2. ONCE THE MAINLINE AND LATERAL LINES HAVE PASSED THEIR RESPECTIVE TESTS AND THE SYSTEM IS COMPLETELY OPERATIONAL, A COVERAGE TEST AND DEMONSTRATION OF THE SYSTEM IS REQUIRED. THE IRRIGATION CONTRACTOR MUST DEMONSTRATE TO THE OWNER OR HIS/HER REPRESENTATIVE THAT PROPER COVERAGE IS OBTAINED AND THAT THE SYSTEM WORKS AUTOMATICALLY FROM THE CONTROLLER. THIS DEMONSTRATION REQUIRES THAT EACH ZONE BE TURNED ON IN THE PROPER SEQUENCE AS SHOWN ON THE PLANS FROM THE CONTROLLER. EACH ZONE WILL BE INSPECTED FOR PROPER COVERAGE AND FUNCTION. THE DETERMINATION OF PROPER COVERAGE AND FUNCTION WILL BE SOLELY DETERMINED BY THE OWNER OR OWNER'S REPRESENTATIVE.

VALVE SCHEDULE

NUMBER	MODEL	SIZE	TYPE	PSI	PSI @ POC	GPM	PRECIP
1	Rain Bird PESBR-PRS-D	1-1/2"	Turf Spray	38.82	69.55	47.08	1.48 in/h
2	Rain Bird PESBR-PRS-D	1-1/2"	Turf Spray	34.37	64.15	46.26	1.45 in/h
3	Rain Bird PESBR-PRS-D	1-1/2"	Turf Spray	37.53	54.95	37.82	1.48 in/h
4	Rain Bird PESBR-PRS-D	1-1/2"	Turf Spray	36.57	52.66	37.55	1.49 in/h
5	Rain Bird PESBR-PRS-D	1-1/2"	Turf Spray	34.15	47.02	37.66	1.42 in/h
6	Rain Bird PESBR-PRS-D	1-1/2"	Turf Spray	38.93	50.53	37.76	1.48 in/h
7	Rain Bird PESBR-PRS-D	1-1/2"	Turf Spray	34.08	42.09	38.11	1.52 in/h
8	Rain Bird PESBR-PRS-D	1-1/2"	Turf Spray	34.12	41.43	41.39	1.41 in/h
9	Rain Bird PESBR-PRS-D	1-1/2"	Turf Spray	34.00	43.07	40.70	1.36 in/h
10	Rain Bird PESBR-PRS-D	1-1/2"	Turf Spray	34.06	44.85	40.65	1.43 in/h
11	Rain Bird PESBR-PRS-D	1-1/2"	Turf Spray	34.41	49.79	45.02	1.48 in/h
12	Rain Bird PESBR-PRS-D	1-1/2"	Turf Spray	34.37	50.34	40.33	1.39 in/h
13	Rain Bird PESBR-PRS-D	1-1/2"	Turf Spray	36.33	56.52	43.60	1.33 in/h
14	Rain Bird PESBR-PRS-D	1-1/2"	Turf Spray	37.72	55.96	40.78	1.42 in/h

RUNTIME SUMMARY

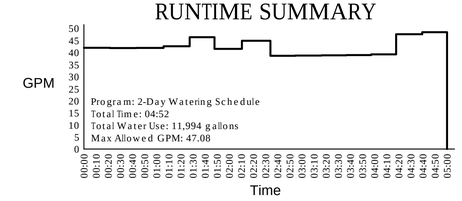

V:\PROJECTS\2014\14-0088.004 - HOLIDAY SPRINGS BLVD IRRIGATION\DESIGN\CAD\14-0088.004_IRR.DWG 3/23/16 by SBORTAK

CHEN•MOORE &ASSOCIATES
Civil & Environmental Engineers, Landscape Architects and Planners
Your trusted Advisor for Infrastructure and Planning Needs for 25 Years
500 West Cypress Creek Road • Suite 630
Fort Lauderdale, FL • 33309
(954) 730-0707
www.chenmoore.com
Fort Lauderdale • Miami • West Palm Beach • North Central Florida • Treasure Coast
CERTIFICATES OF AUTHORIZATION
EB0004593 LC26000425

CLIENT:

CITY OF MARGATE, FLORIDA
PARKS AND RECREATION
6199 NW 10th Street
Margate, FL • 33063
(954) 972-6458
www.margatefl.com

PROJECT INFO:

HOLIDAY SPRINGS BOULEVARD MEDIAN IRRIGATION
MARGATE, FLORIDA
FOR: CITY OF MARGATE, FLORIDA

SEAL:

CRISTOBAL BETANCOURT, RLA
FLORIDA REG.# 6666941

NO.	DATE	REVISION
1	11/6/15	GIS/PLAN UPDATES PER CITY COMMENTS
2	3/23/16	ADDENDUM 1 PER CITY COMMENTS

MSB	MSB	CAB
DES.	DWN.	CHK.

100% CONSTRUCTION DOCUMENTS

088.004 | 2014-07-22

IRRIGATION SPECIFICATIONS

L1.06