February 15, 2020

Mr. Curvin Biscette
Redeeming Lighthouse of God Int'l Ministries
10315 NW 39 Manor
Coral Springs, FL 33065

Re: Redeeming Lighthouse - Margate, Florida
Parking Statement

Dear Mr. Biscette:

As requested, Danielsen Consulting Engineers, Inc. (DC Engineers, Inc.) has prepared this parking statement specific to the conversion of 1,327 square feet within the Royal Palm Court retail center from a FIT 5 fitness center to a sanctuary for use by the Redeeming Lighthouse of God Int'l Ministries. It is our understanding the project site is located at 7452 Royal Palm Boulevard within municipal limits of the City of Margate, Florida. Figure 1 shows the location of the overall project site.

The proposed conversion of 1,327 square feet within the Royal Palm Court retail center will not result in the material loss of parking spaces as all work is expected to remain interior to the subject store front. A survey of the overall property, included as Attachment A, shows the 23,680 square foot Royal Palm Court retail center currently has 108 total surface parking spaces of which five (5) spaces are designated as ADA accessible. A 'change of use' plans package specific to the proposed Redeeming Lighthouse is included as Attachment B.

Site Data

As all onsite uses are contained within one (1) building with a shared parking supply, from a trip generation and parking perspective, the site operates as one (1) retail property. With 23,680 square feet hosting a variety of tenants including restaurants, personal care providers and office space, the 108 surface parking spaces are shared throughout the day by employees and patrons alike.

ITE Parking Analysis

A parking analysis has been conducted in accordance with procedures and data included within the current edition of the Institute of Transportation Engineers (ITE) *Parking Generation Manual (5th Edition).* This publication contains parking data, rates and formulae for a variety of land uses based upon research conducted by transportation professionals throughout the country. The applicable ITE land use for this analysis is Land Use Code (LUC) 820 - Shopping Center.

Utilizing parking generation data provided by ITE in LUC 820, a detailed parking analysis was completed to identify peak parking demand of the Royal Palm Court retail center by day of the week (i.e. Monday through Thursday, Friday, Saturday, and Sunday). Specifically, average peak parking generation rates were considered. The results of this analysis are shown in Table 1, attached. The parking analysis shows that the peak parking demand is projected to occur on a typical Saturday (around 1:00 PM) with 69 spaces occupied. As a result, 35 parking spaces would remain unoccupied and available.

It is important to note that the 50-seat worship center proposed is expected to be active on Sundays (9:00 AM to 5:00 PM), Wednesdays (8:00 PM to 10:30 PM) and Fridays (7:30 PM to 10:00 PM), exclusively.

As required by the City of Margate, a Master Parking Plan has been prepared by SunTech Engineering, Inc. and is included as Attachment C. The Master Parking Plan shows a loss of four (4) onsite parking spaces due to the inclusion of end islands in two (2) locations. Regardless, even with 104 parking spaces onsite (99 regular and five (5) ADA accessible spaces) the peak parking demand realized through application of ITE rates can be comfortably accommodated.

ADA Parking

The survey included as Attachment A shows 108 onsite parking spaces are currently in place including five (5) ADA accessible spaces. Similarly, the Master Parking Plan included as Attachment C shows 104 onsite parking spaces including five (5) ADA accessible spaces. According to applicable Florida Statutes, five (5) ADA accessible parking spaces are appropriate for the Royal Palm Court retail center.

Loading Zones

An off-street loading area is currently provided along the south side of the retail center in compliance with Article XXXIII Section 33.9 of the Code of Ordinances specific to the City of Margate which states, *'for the purposes of this section, an off-street loading space shall be an area at grade level at least twelve (12) feet wide by forty-five (45) feet long with fourteen and a half (14½) foot vertical clearance. Each off-street loading space shall be directly accessible from a street or alley without crossing or entering any other required off-street loading space, and arranged for convenient and safe ingress and egress by motor truck and/or trailer combination.* Reference both the survey in Attachment A and the Master Parking Plan in Attachment C.

Of course, please do not hesitate to contact me directly with any questions you may have.

Sincerely,

DC ENGINEERS, INC.

J. Suzanne Danielsen, P.E.
Senior Transportation Engineer

SUZANNE DANIELSEN
LICENSE
No. 42533
STATE OF
FLORIDA
2.15.21
PROFESSIONAL ENGINEER

J. Suzanne Danielsen, P.E.
Florida Registration Number 42533
Danielsen Consulting Engineers, Inc.
12743 NW 13th Court
Coral Springs, FL 33071
CA # 3202

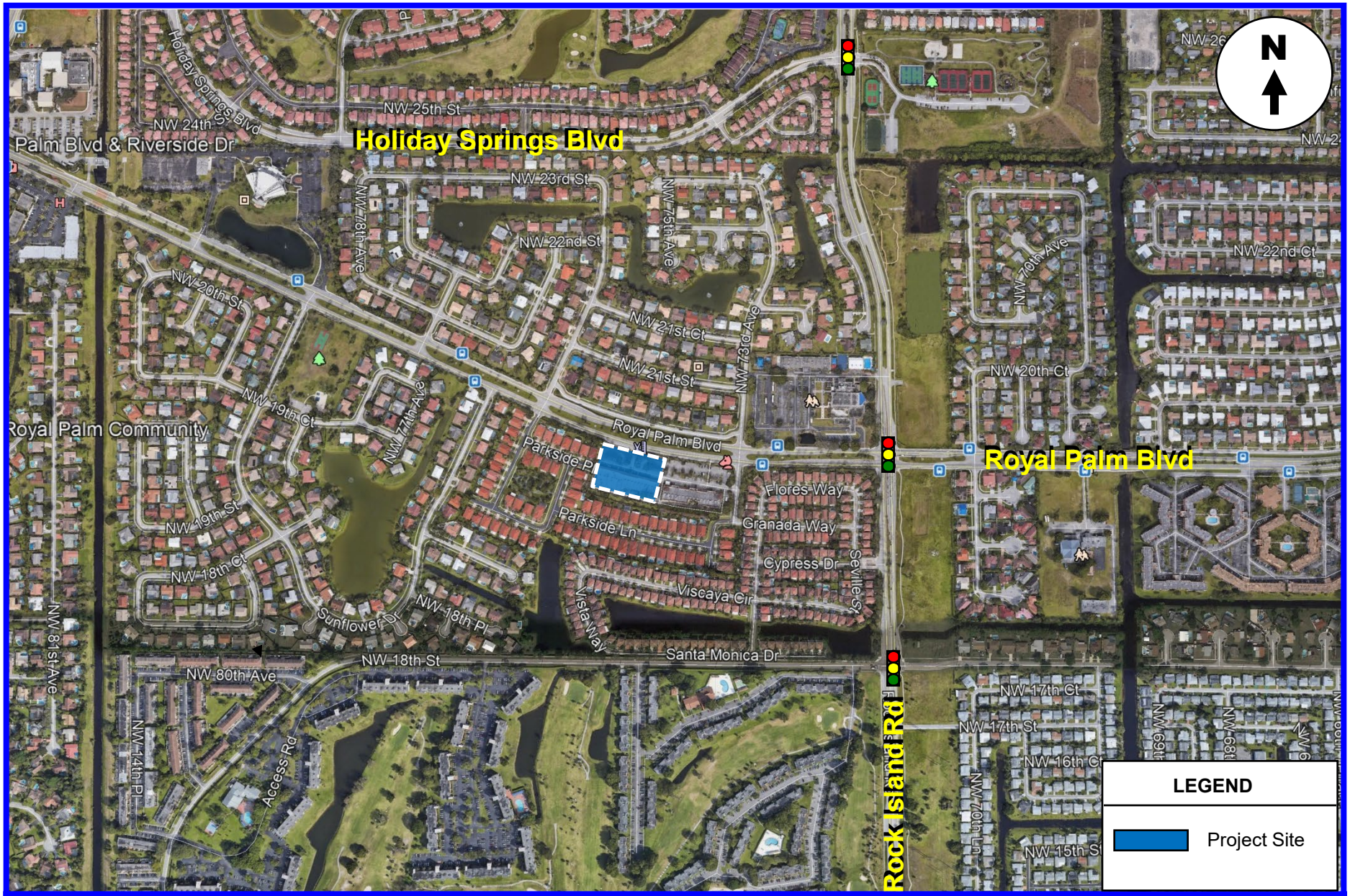

DC Engineers, Inc.	Project Location Map	FIGURE 1 Redeeming Lighthouse Margate, Florida

Table 1

Land Use	ITE Code	Tenant	Building Area	Peak Parking Demand per ITE			
				Mon-Thurs	Friday	Saturday	Sunday
Shopping Center	820	Royal Palm Court	23,680	46	62	69	45

ATTACHMENT A

Survey

Boundary Survey

PROPERTY ADDRESS:
7432-7462 ROYAL PALM BLVD
MARGATE, FL. 33063

LEGAL DESCRIPTION:
LOTS 5, 6, 7, 8, 9 AND 10 BLOCK 'M' AND LOTS 5, 6, 7, 8, 9 AND 10, BLOCK 'N' OF "GATEWAY MILE" ACCORDING TO THE PLAT THEREOF, AS RECORDED IN PLAT BOOK 63, PAGE 15 OF THE PUBLIC RECORDS OF BROWARD COUNTY, FLORIDA.

CERTIFICATIONS:
BILU ORGANIZATION, LLC
GEIL S. BILU, P.A.
OLD REPUBLIC NATIONAL TITLE INSURANCE COMPANY
CENTER STATE BANK, INC.,
PROGRESSIVE CREDIT UNION
its successors and/or assigns,
as their interests may appear

FLOOD DATA:
ZONE: X
COMMUNITY NUMBER: 120048
PANEL & SUFFIX: 0165 H
DATE OF FIRM: 8/18/2014

Surveyor's Notes
1. **Bearing Reference:** The bearings shown hereon are referenced to the recorded plat.
2. Legal description provided by client.
3. No attempt was made to locate any underground utilities, except as shown.
4. The information shown hereon is for title purposes only, and, unless otherwise specified, should not be used for construction.
5. The dimensions shown hereon have an estimated horizontal positional accuracy of 0.10 feet.
6. This survey is not valid without the signature and original raised seal of a Florida licensed Surveyor and Mapper.
7. This survey was prepared without benefit of a title commitment. There may be additional matters of record, not shown, which can be found in the Public Records of the corresponding county noted hereon.

GENERAL LEGEND:

BCR	= BROWARD COUNTY RECORDS	ORB	= OFFICIAL RECORDS BOOK
BM	= BENCHMARK	PB	= PLAT BOOK
C/L	= CENTERLINE	PBCR	= PALM BEACH RECORDS
CBS	= CONCRETE BLOCK STRUCTURE	PCP	= FOUND NAIL AND CAP
CONC	= CONCRETE	PG	= PAGE
DE	= DRAINAGE EASEMENT	POB	= POINT OF BEGINNING
D	= DELTA (CENTRAL ANGLE)	POC	= POINT OF COMMENCEMENT
ELEV.	= ELEVATION	R	= RADIUS
X 0.00'	= EXISTING ELEVATION	R/W	= RIGHT OF WAY
EOW	= EDGE OF WATER	S/W	= SIDEWALK
FF	= FINISHED FLOOR	SIR	= SET 1" IRON ROD
FN	= FOUND NAIL	SND	= SET NAIL & DISC
INV	= INVERT	UE	= UTILITY EASEMENT
FIP	= FOUND IRON PIPE	W/M	= WATER METER
FIR	= FOUND IRON ROD		
FND	= FOUND NAIL AND DISC		
L	= ARC LENGTH		
MDCR	= MIAMI-DADE COUNTY RECORDS		
N/D	= NAIL AND DISC		

DATE:	REVISIONS:
11/20/2014	FIELD LOCATION OF IMPROVEMENTS

SCALE: 1" = 20'
CADD: LJ
QA / QC: DG
INVOICE NO. 14-41029
SHEET NO. 1 of 1

DATE: 11/20/2014

DENNIS J. GABRIELE
PROFESSIONAL SURVEYOR AND MAPPER
NO. L.S. 5709 STATE OF FLORIDA

ALL COUNTY SURVEYORS
PROFESSIONAL SURVEYORS AND MAPPERS
LICENSE NO. 6677
OFFICE: (954) 777-4747
FAX: (954) 777-2707
5400 SOUTH UNIVERSITY DRIVE
DAVIE, FLORIDA 33328 SUITE 210

ATTACHMENT B

Application Package

A Change of Use for:

Redeeming Lighthouse

7452 ROYAL PALM BLVD
MARGATE FL 33063

TERMS OF USE & LICENSE AGREEMENT

Building Codes And Zoning Requirements
At the time of creation, these plans were designed to meet the requirements of a nationally recognized model building code in effect where these plans were produced. Because of the great differences in geography and climate throughout the United States each state, county and municipality has its own building codes, zone requirements, ordinances and building regulations. These plans may need to be modified and additional drawings and details may need to be added to comply with your local conditions, requirements, and a wide range of other matters.All of our plans can be adapted to the local building codes and requirements. It is the responsibility of the purchaser and/or builder of each plan to see that the structure is built in strict compliance with the governing municipal codes (city, county, state and federal). In addition to the building plans that you order, you will also need a site plan that shows where the house is going to be located on the lot. There are some areas of the country that have very strict engineering codes. If you are building in this type of area, it is possible that you will need to hire a local engineer to analyze the house and provide additional drawings and calculations that may be required by your building department.
Notice Duty Of Cooperation
Our firm assumes no liability for any home constructed from these plans. Only qualified Designers, Architects, Contractors or Structural Engineers should attempt to *modify* any portion of these plans. It is the sole responsibility of the purchaser to obtain any and all structural analysis, engineering and specifications that are required where the structure is to be built. Written dimensions on these drawings should have precedence over scaled dimensions; the contractor shall verify and be responsible for all dimensions and conditions on the job.
Architectural And Engineering Seals
Some cities and states are now requiring that a licensed architect or engineer review and "seal" these plans, or officially approve them prior to construction. In addition, you may need to obtain permits or inspections from your local governments before and in the course of construction. Prior to using these plans, we strongly advise that you consult a licensed architect or engineer, as well as consult with your local building official before applying for any permit or before starting any construction related to these plans. We authorize the use of these plans on the express condition that you strictly comply with all local building codes, zoning requirements and other applicable laws, regulations, ordinances and requirements.
License Agreement
By the purchase of our plans, customers are granted a *limited license* to use the plans for the construction of only **one** home. It is strictly *prohibited* to reproduce, sell, modify, trace, redraw or reuse the plans or designs without the written permission from the copyright owner. This limited license also applies to all other reproducible media. All orders, once placed, are *final*. *No refunds or exchanges* will be granted.
Terms And Conditions
It is not permitted to copy any part of our original designs or reproduce them in any way or by any means, unless you have purchased reproducible plans, which clearly indicate your right to copy or duplicate these plans. We do not authorize them to be sold to another person or third party. We only authorize the use of your chosen design as an aid in the construction of one single-family home. You may not use this design or these plans to build a second or multiple dwellings without purchasing another set of plans or paying additional design fees.
Terms And Conditions - Ownership and Use of Documents
The **Architect** shall have the right to include representations of the Design of Project, including, but not limited to, photographs, plans, drawings, artistic renderings, digital images, and/or videotape, and/or such other similar demonstrative images of the exterior and interior of the subject project, among the **Architect's** promotional, marketing, advertising, and/or professional materials (collectively, "marketing materials"). The **Architect's** marketing materials shall not include any image and/or description of the **Client's** confidential or proprietary information and/or property.
The **Architect** shall be permitted to post an appropriate job site sign, which sign may include the Architect's name, business address, business telephone number, and/or such other similar business related information, within the boundary of the subject property, beginning with the issuance of the permit through the commencement date of issuance of a certificate of occupancy.
Copyright Laws - Infringement Penalty
These designs and plans are protected under the terms of United States Copyright Law and may not be copied or reproduced in any way by any means. All floor plans, renderings and other media advertised are the exclusive property of **Sandra Puerta Architecture, P.A.** Any willful infringement to Copyright Laws by any individual may be subject to severe penalties, actual damages, profit made, and attorneys fees of the owner of the copyright.
General Disclaimer
Our architects have taken substantial care and effort to create these plans. However, because the architects cannot provide on-site consultation, supervision and control over actual construction, and because of the great variances in local building requirements, building practices and soil, seismic, weather and other conditions, we cannot assume any responsibility or liability or make any warranty, express or implied, with respect to the content or use of these plans.
Disclaimer Of Warranties
You agree that use of the site is at your sole risk. The site is provided on an "as is" and "as available" basis. **Sandra Puerta Architecture, P.A.**, its affiliates, officers, employees, agents and licensors cannot and do not imply or warrant the accuracy, completeness, currentness, non-infringement, merchantability, or fitness for a particular purpose of the information or applications available through the service.
You further agree that you will use any data or information obtained through this site at your own discretion and risk. You will be solely responsible for any damage to your computer system or loss of data that results from the download of such material or data.
Sandra Puerta Architecture, P.A., its affiliates, officers, employees, agents and licensors make no warranty regarding any goods or services referred to, advertised on, or obtained through our sites, other than those specifically expressed by **Sandra Puerta Architecture, P.A.**,
Limitation Of Liability
Under no circumstances shall **Sandra Puerta Architecture, P.A.**, or its affiliates, officers, employees, agents, or licensors be liable to you or anyone else for any damages arising out of use of the services, including, without limitation, liability for consequential, special, incidental, indirect, or similar damages. You also agree that the liability of **Sandra Puerta Architecture, P.A.**, its affiliates, officers, employees, agents and licensors, if any, arising out of any kind of legal claim in any way connected to the service shall not exceed the amount you paid for the service. Because some states do not allow the exclusion or limitation of certain categories of damages, the above limitation may not apply to you. In such states, the liability of **Sandra Puerta Architecture, P.A.**, its affiliates, officers, employees, agents and licensors is limited to the fullest extent permitted by such state law.
Applicable Law
This site is created and controlled by **Sandra Puerta Architecture, P.A.**, in the State of Florida. As such, the laws of the State of Florida will govern these disclaimers, terms and conditions, without giving effect to any principles of conflicts of laws. **Sandra Puerta Architecture, P.A.** reserves the right to make changes to its site and these disclaimers, terms and conditions at any time. You hereby irrevocably and unconditionally consent to submit to the exclusive jurisdiction of the courts of the State of Florida, and of the United States of America located in Broward County, Florida for any disputes arising out of or relating to use of or purchase made through **Sandra Puerta Architecture, P.A.**, and agree not to commence any litigation relating thereto except in such courts, waive any objection to the laying of venue of any such litigation in the in Broward County, Florida courts and agree not to plead or claim in any court that such litigation brought therein has been brought in an inconvenient forum.
Dispute Resolution
In the unlikely event that any controversy or claim arising out of or relating to this User Agreement or our services shall be settled by binding arbitration in accordance with the commercial arbitration rules of the American Arbitration Association. Any such controversy or claim shall be arbitrated on an individual basis and shall not be consolidated in any arbitration with any claim or controversy of any other party. The arbitration shall be conducted in Broward County, Florida, and judgment on the arbitration award may be entered into any court having jurisdiction thereof. Either you or we may seek any interim or preliminary relief from a court of competent jurisdiction in Broward County, Florida, necessary to protect the rights or property of you or us pending the completion of arbitration.
Miscellaneous
In the event that any provision of the User Agreement conflicts with the law under which the User Agreement is to be construed or if any provision is held invalid by a court with jurisdiction over the parties to the User Agreement, such provision will be restated to reflect as nearly as possible the original intentions of the parties in accordance with applicable law, and the remainder of this User Agreement will remain in full force and effect. If either party fails to insist upon or enforce strict performance by the other party of any provision of the User Agreement, or to exercise any right under the User Agreement, such a failure will not be construed as a waiver or relinquishment to any extent of such party's right to assert or rely upon any such provision or right in that or any other instance. That is, all provisions and rights will remain in full force and effect.

VICINITY MAP

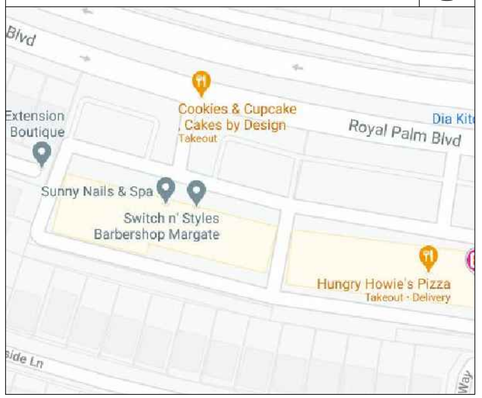

SATELLITE AERIAL

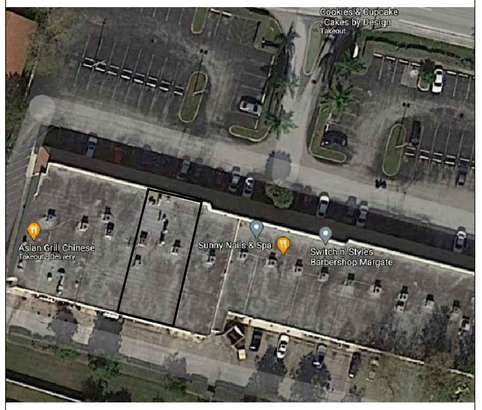

OCCUPANCY LOADS

OCCUPANCY LOAD CALCULATIONS
TABLE 1004.1.1 - MAX FLOOR AREA ALLOWANCES PER OCCUPANT

OCCUPANCY	AREA PER OCCUPANT (CONCENTRATED, CHAIRS ONLY - NOT FIXED SQ.FT. 7 NET) (SQ.FT. 100 GR)	
A - Assembly	**GREAT ROOM** TOTAL NET AREA : **ASSEMBLY**	
	BY AREA 1,327 S.F. @7 SF/APP =	189
	BY SEATING =	50
B - Bussiness	**STORAGE** TOTAL GROSS AREA : **MERCANTILE**	
	AREA 287 S.F. @300 SF/APP =	1
	TOTAL	**51**

SCOPE OF WORK

1. CHANGE OF USE FROM GENERAL COMMERCIAL TO ASSEMBLY(A-3).
2. PROPOSED WALLS AS PER PLANS.
3. ELECTRICAL WORK AS PER PLANS.
4. SEE PLANS FOR MORE INFORMATION.

NO MECHANICAL WORK .
ALL EXISTING TO REMAIN.

CODE RESEARCH

NEW OCCUPANCY
A3 -Assembly
TYPE OF CONSTRUCTION
TYPE IIIB - NOT PROTECTED (UNSPRINKLERED)
EGRESS WIDTH BUILDING 1
1 EXITS REQUIRED, 2 EXITS PROVIDED PER 1005.3.2
213 OCCUPANTS x 0.2" = 42.6" REQUIRED
48" PROVIDED
PLUMBING FIXTURE CALCULATIONS:
REQUIRED BY FLORIDA BUILDING CODE
BASED ON A-3 ASSEMBLY OCCUPANCY
UNISEX

WATER CLOSET: 1 PER 150 FOR MALES AND 1 PER 75 FOR FEMALES
2 REQUIRED/ 2 PROVIDED

LAVATORIES: 1 PER 200
2 REQUIRED/ 2 PROVIDED

1 DRINKING FOUNTAIN PER TABLE 403.2 FBC - P

AREA CALCULATIONS

EXIST.TOTAL AREA	**1,327 S.F.**

NOTE:
EXISTING ASSEMBLY AREA IS **NOT** BEING CHANGED IN SQUARE FOOTAGE OF SPACE.

DESIGN WIND PRESSURES

WINDOWS & DOORS	POS +42.9 P.S.F. NEG -57.3 P.S.F. WORST CASE ALL OPENINGS		
ROOF	FIELD ZONE	1	-42.8 PSF
	3' EDGE ZONE	2	-71.9 PSF
	3' x 3' CORNERS	3	-108.2 PSF

PROPERTY INFORMATION

ALL WORK TO BE PERFORMED IN ACCORDANCE WITH THE F.B.C. 2017 EDITION WITH ALL AMENDMENTS, THE N.E.C., THE ZONING ORDINANCES IN THE CITY OF JURISDICTION AND ALL APPLICABLE CODES AND STANDARDS.

LEGAL DESCRIPTION
GATEWAY MILE 63-15 B LOTS 5 THRU 10 & VAC 20 ALLEY LYING BET LOTS 5 & 6 & LOTS 7 THRU 10 BLK M TOGETHER WITH LOTS 5 THRU 10 & VAC 20 ALLEY LYING BET LOTS 5 & 6 & LOTS 7 THRU 10 BLK N
MUNICIPALITY
MARGATE
Parcel Control Number:
4841 26 01 2190
SUBDIVISION

LAND USE CODE
STORES, 1-STORY
ZONING CODE
GENERAL COMMERCIAL
LOCATION ADDRESS
7452 ROYAL PALM BLVD
CLASSIFICATION OF WORK
ALTERATION LEVEL 2

PROJECT TEAM

OWNER
BILU ORGANIZATION LLC
2720 W ATLANTIC BLVD
POMPANO BEACH FL 33069

ARCHITECT
SANDRA PUERTA, AR 95385
6476 Kirsten Way
Lake Worth, FL 33467
Voice | 561.712.8898
Fax | 561.828.2645
Email | sandra@thearchitectgroup.com

BUILDING DEPARTMENT
MARGATE CITY BUILDING DEPARTMENT
901 NW 66TH AVE B
MARGATE, FL 33063
VOICE: 954.970.3004

ZONING DEPARTMENT
MARGATE CITY ZONING
901 NW 66TH AVE B
MARGATE, FL 33063
VOICE: 954.970.3004

SHEET INDEX

CVR	COVER SHEET
A-0	GENERAL NOTES + SPECIFICATIONS
A-1	AS BUILT FLOOR PLAN
A-2	EGRESS PLAN + NOTES
A-3	DETAILS FOR CONSTRUCTION
E-1	ELECTRICAL PLAN + NOTES
E-2	REFLECTING CEILING LIGHTS PLAN+NOTES
M-1	AS BUILT MECHANICAL PLAN + NOTES

CONTRACTOR TO VERIFY ANY CONDITION AND NOTIFY ALL RESPONSIBLE PARTIES IF THERE ARE ANY DISCREPANCIES. THE ARCHITECT ASSUMES NO RESPONSIBILITY.

ALL WORK TO BE PERFORMED IN ACCORDANCE WITH THE F.B.C. 2017 EDITION WITH ALL AMENDMENTS, THE N.E.C., THE ZONING ORDINANCES IN THE CITY OF JURISDICTION AND ALL APPLICABLE CODES AND STANDARDS.

SANDRA PUERTA ARCHITECT
THE CONSTRUCTION AND ARCHITECTURE GROUP, INC.
SANDRA PUERTA FL Lic. #: AA26002780 • AR 95385
6476 Kirsten Way, Lake Worth, FL 33467
Phone | 561.248.5498 Fax | 561.828.2645

DATE:
Oct. 15, 20.

BLDG. DEPT. PLAN REVISIONS:
1
2
3
4
5
6
7

A Change of Use for:
Redeeming Lighthouse
7452 ROYAL PALM BLVD
MARGATE FL 33063
Parcel ID: 484126012190

Cover and Project Information

MANAGED BY: FZ
DRAWN BY: AD/FZ
REVIEWED BY: SP

SHEET:
CVR

TYPICAL GENERAL NOTES

SOME ITEMS DO NOT APPLY IF NOT PART OF THE SCOPE OF WORK

GENERAL NOTES

ALL WORK SHALL BE PERFORMED IN ACCORDANCE WITH ALL CODES, RULES, REGULATIONS AND RESTRICTIONS HAVING JURISDICTION ON THIS PROJECT. IN THE EVENT OF A CONFLICT BETWEEN PERTINENT CODES AND REGULATIONS AND REFERENCED STANDARDS OF THESE SPECIFICATIONS, THE MORE STRINGENT PROVISIONS SHALL GOVERN. WORK SHALL INCLUDE ALL ITEMS (BUILDING AND SITE) INDICATED ON THESE DRAWINGS UNLESS OTHERWISE NOTED. CONTRACTOR SHALL VERIFY ALL DIMENSIONS PRIOR TO CONSTRUCTION. THE ARCHITECT SHALL BE NOTIFIED OF ANY DEVIATION FROM THE PLANS PRIOR TO CONSTRUCTION. DRAWINGS SHALL NOT BE SCALED; WRITTEN DIMENSIONS SHALL TAKE PRECEDENCE OVER SCALED DIMENSIONS. SHOP DRAWINGS SHALL BE SUBMITTED TO THE ARCHITECT FOR GENERAL REVIEW AND DESIGN COMPLIANCE. CONTRACTOR SHALL MAINTAIN TEMPORARY ELECTRICAL, WATER AND SANITARY FACILITIES FOR THE DURATION OF CONSTRUCTION. CONTRACTOR SHALL REMOVE ALL CONSTRUCTION DEBRIS FROM THE JOB SITE AND LEAVE THE BUILDING BROOM CLEAN. THE CONTRACTOR SHALL ACQUAINT HIMSELF WITH THE SITE PRIOR TO CONSTRUCTION AND SHALL VERIFY ALL FIELD CONDITIONS PRIOR TO ACTUAL CONSTRUCTION. ANY DEVIATION FROM THE CONSTRUCTION DOCUMENTS DISCOVERED AT THIS TIME SHALL BE REPORTED BY THE CONTRACTOR IMMEDIATELY TO THE ARCHITECT. ALL WORKMANSHIP SHALL BE NEAT, CLEAN, TRUE AND CORRECT. OMISSIONS FROM THE DRAWINGS OR SPECIFICATIONS OR THE MISDESCRIPTION OF DETAILS OF WORK, WHICH ARE MANIFESTLY NECESSARY TO CARRY OUT THE INTENT OF THE DRAWINGS AND SPECIFICATIONS, OR WHICH ARE CUSTOMARILY PREFORMED, SHALL NOT RELIEVE THE CONTRACTOR FROM PERFORMING SUCH OMITTED OR MISDESCRIBED DETAILS OF WORK, BUT THEY SHALL BE PERFORMED AS IF FULLY AND CORRECTLY SET FORTH AND DESCRIBED IN THE DRAWINGS AND SPECIFICATIONS.

THE CONTRACTOR SHALL GUARANTEE IN WRITING, IN A FORM ACCEPTABLE TO THE OWNER, ALL LABOR AND MATERIALS INSTALLED BY HIM FOR A PERIOD OF NOT LESS THAN ONE YEAR AFTER THE DATE OF FINAL ACCEPTANCE. SHOULD DEFECTS OCCUR, ALL WORK SHALL BE REPLACED OR PROPERLY REPAIRED AT NO ADDITIONAL COST TO THE OWNER. SUBSTANTIAL COMPLETION SHALL BE ATTAINED WHEN ALL PHASES OF THE WORK ARE COMPLETE AND THE SPACE CAN BE USED FOR WHAT IS INTENDED, EXCLUDING PUNCH LIST ITEMS.

BUILDING IDENTIFICATION

APPROVED NUMBERS OR ADDRESSES SHALL BE PLACED ON ALL NEW AND EXISTING BUILDINGS IN SUCH POSITION AS TO BE PLAINLY VISIBLE AND LEGIBLE FROM THE STREET OR ROAD FRONTING THE PROPERTY. SAID NUMBERS SHALL CONTRAST WITH THEIR BACKGROUND

COLUMNS

ALL WOOD AND/OR STEEL COLUMNS SHALL BE 1 HOUR FIRE RATED TOP OF ISOLATED EXTERIOR AND PERIMETER COLUMN FOOTING PADS SHALL MATCH THE BOTTOM OF MONOLITHIC WALL FOOTING ELEVATIONS (MINIMUM 1'-4" BELOW TOP OF SLAB ELEVATION, OR AS DETAILED ON THE PLANS.

DOORS & WINDOWS

ALL BEDROOMS REQUIRE AN OUTSIDE WINDOW OR DOOR OPERABLE FROM THE INSIDE WITHOUT THE USE OF TOOLS AND PROVIDING A CLEAR OPENING OF NOT LESS THAN 20 INCHES WIDTH, 24 INCHES IN HEIGHT AND 5.7 SQ.FT. IN AREA. THE BOTTOM OF THE OPENING SHALL NOT BE MORE THAN 44" OFF THE FLOOR AND NO PART OF THE OPERATING MECHANISM SHALL BE PLACED HIGHER THAN 54" ABOVE FINISHED FLOOR. SINGLE HUNG WINDOW OPERATING MECHANISMS SHALL BE AT OR NEAR THE SILL. WINDOWS MARKED 'EGRESS' MUST BE MANUFACTURED TO CONFORM TO THE BUILDING CODE WITH RESPECT TO MINIMUM EMERGENCY EGRESS REQUIREMENTS PER N.F.P.A. 101 CHAPTER 22-2. A DOOR MARKED IN PLAN CALLED 'EMERGENCY EGRESS' SHALL BE DESIGNATED AS AN EXTERIOR DOOR NOT TO BE SHUTTERED FOR EMERGENCY EXIT DURING HURRICANE EMERGENCY CONDITIONS. DOOR TO HAVE A MIN. CLEAR OPENING OF 29", AND TO HAVE PASSED REQUIRED IMPACT AND MISSLE TESTS.

WINDOW SAFEGUARD NOTE

WHERE THERE IS A DROP OF MORE THAN 4 FEET ON THE FAR SIDE OF SUCH WINDOWS AND THE SILL IS LESS THAN 36 INCH ABOVE THE NEAR SIDE WALKING SURFACE, SAFEGUARDS SHALL BE PROVIDED TO PREVENT THE FALL OF PERSONS WHEN SUCH WINDOWS ARE OPEN.

SECURITY NOTES

ALL LOCKS ON EXTERIOR DOORS SHALL RESIST A FORCE OF 300 # APPLIED IN ANY MOVABLE DIRECTION. ALL EXTERIOR LOCKS SHALL BE SINGLE CYLINDER WITH 1" THROW FOR 1 3/4" SOLID CORE DOOR. ALL SINGLE EXTERIOR SWING DOORS SHALL HAVE A KEY OPERATED LOCK, OPERABLE FROM EXTERIOR WITH A MINIMUM 6000 POSSIBLE KEY CHANGES. KEY ON KNOB LOCKS SHALL HAVE AN AUXILIARY DEAD BOLT WITH HARDENED BOLT OR WITH INSERT. EXTERIOR SWING DOORS SHALL BE SOLID CORE NOT LESS THAN 1 3/4" THICK. FRONT MAIN ENTRANCE DOORS SHALL BE PROVIDED WITH VISION SCOPE OR VISION PANEL. HINGES ON OUT SWINGING EXTERIOR DOORS SHALL HAVE NON-EXPOSED SCREWS AND NON-REMOVABLE PINS. SINGLE SWING EXTERIOR DOORS CONNECTING LIVING AREAS WITH GARAGE AREAS SHALL BE SOLID CORE 1 3/4" THICK AND SHALL BE SECURED WITH A LATCH AND SINGLE BOLT WITH ONE INCH MIN. THROW OR A COMBINATION OF DEAD BOLT AND DEAD LATCH SETS AND AN AUTOMATIC DOOR CLOSER. ALL GLASS IN EXTERIOR DOORS SHALL COMPLY WITH ANSI 279.1 ALL WINDOWS (OPERABLE) SHALL WITHSTAND A FORCE OF 150# IN ANY OPERABLE DIRECTION. SLIDING GLASS DOORS AND WINDOWS SHALL BE INSTALLED AND CONSTRUCTED SO THAT NO PANEL CAN BE LIFTED FROM TRACKS POSITION AND SHALL COMPLY WITH THE A.A.MA.A STANDARDS FOR FORCED ENTRY RESISTANCE A.A.M.A. 1303-3. SLIDING GLASS DOORS SHALL HAVE DEAD BOLT OR PIN SYSTEM NOT REMOVABLE FROM THE OUTSIDE AT THE JAMB AND SILL. INTERIOR DOORS TO HAVE CYLINDRICAL TYPE LOCK SETS WITH PRIVACY LOCK BY INSIDE PUSH BUTTON WHICH AUTOMATICALLY OPENS BY TURN OR CLOSING ACCORDING TO FED. SPEC. #160 AND 1511. OVERHEAD DOORS SHALL BE PROVIDED WITH MULTIPLE POINT LOCKS OR BE LOCKED AT MORE THAN ONE POINT WITH HARDENED BOLTS WITH INSERTS ENGAGING AT LEAST TWO OPPOSITE POINTS A MIN. OF 5/8".

POST PERMANENT SIGN WITH 1/2" LETTERS ON THE INSIDE FACE OF ANY ONE DOOR TO OUTSIDE: "DO NOT OPERATE ENGINES WITH DOORS CLOSED, CARBON MONOXIDE EMISSION."

NON-BEARING INTERIOR PARTITIONS

ALL INTERIOR NON BEARING PARTITIONS SHALL BE 3 5/8" METAL STUDS 26 GA AT 24" C/C MAXIMUM SPACING WITH 1/2" MINIMUM GYPSUM DRYWALL EACH SIDE.

BATHROOMS

BATHROOM FLOORS AND BASE SHALL BE IMPERVIOUS MATERIALS TILE FINISH, SELECTED BY OWNER

MIRRORS / GLAZING

MIRRORS SHALL BE ANCHORED TO STUDS WHEN IN EXCESS OF 9 S.F. TEMP GLAZING SHALL BE PROVIDED IN TUB & SHOWER WINDOWS & MIRRORS WHERE LESS THAN 60" A.F.F. ALL GLASS WITHIN 24" OF ANY DOOR, FIXED GLASS, SLIDING GLASS DOORS OR LOCATED WITHIN 60" OF FLOOR AND ALL GLAZING AT TUB AND SHOWER ENCLOSURES, WHIRLPOOLS, SPAS, SAUNAS AND STEAM ROOMS SHALL BE TEMPERED SAFETY GLASS.

FIREPLACE NOTES:

A. FIREBOX, SHALL BE IN ACCORDANCE WITH ALL LOCAL CODES, RULES & REGULATIONS HAVING JURISDICTION.
B. CLEAR FIREPLACE OPENING SHALL BE 40x29x16" DEEP.
C. PROVIDE 12"x12" FLUE LINING
D. PROVIDE FIREBRICK INNER HEARTH & LINING
E. MASONRY CHIMNEY (SEE ELEVATIONS) TOP OF FLUE TO BE 24" ABOVE. THE HIGHEST POINT 10'-0" AWAY.
F. PROVIDE 24" DEEP TILED OUTER HEARTH, 12" ABOVE FINISHED FLOOR & MIN. 16" WIDER THAN FIREPLACE OPENING
G. PROVIDE CAST IRON DAMPER.
H. FIREPLACE AND MATERIALS TO BE U.L. RATED AND APPROVED.
I. ALL WOOD BEAMS, JOISTS, AND STUDS SHALL BE TRIMMED AWAY FROM FIREPLACES. HEADERS SUPPORTING TRIMMER ARCHES AT FIREPLACES SHALL BE NOT LESS THAN TWENTY INCHES FROM THE FACE OF THE CHIMNEY BREAST. TRIMMERS SHALL BE NOT LESS THE SIX INCHES FROM THE INSIDE FACE OF THE NEAREST FLUE LINING
J. WOODWORK SHALL NOT BE PLACED WITHIN SIX INCHES OF A FIREPLACE OPENING. WOODWORK ABV AND PROJECTING MORE THAN ONE AND ONE-HALF INCH FROM A FIREPLACE OPENING SHALL NOT BE PLACED LESS THAN TWELVE INCHES FROM THE TOP OF A FIREPLACE OPENING.
K. PROVIDE A U.L. RATED AND APPROVED CHIMNEY CAP W/ INTEGRAL BUILT-IN SPARK ARRESTER AND RAIN CAP AND BASE FLASHING.

STRUCTURAL NOTES

CONCRETE THIS BUILDING DESIGNED PER : 2705.2(a) - ACI-530-2/ ASCE 5-92/ TMS 402-92 2705.2(b) - ACI-530.1-92/ ASCE 6-92/ TMS 602-92 /ASCE-7
THE FOUNDATION SHOWN HAS BEEN DESIGNED BY RATIONAL ANALYSIS BY THE ENGINEER OF RECORD SOIL BEARING CAPACITY: 2500 PSF, IF INFERIOR SOIL IS ENCOUNTERED OR IF 2500 PSF CANNOT BE OBTAINED BY PROPER FILLING AND COMPACTION, CONTACT ARCHITECT. VERIFICATION OF THE TEST FOR MODIFIED PROCTOR ASTM D 1557 SHALL BE FILED WITH THE GOVERNING BUILDING DEPARTMENT. BACKFILL SHALL CONSIST OF NON-EXPANSIVE, FREE DRAINING, PREDOMINANTLY GRANULAR MATERIAL, FREE OF DEBRIS AND ORGANIC MATERIAL. SLABS 2500 PSI FOUNDATIONS 2500 PSI COLUMNS & BEAMS 3000 PSI CONCRETE SHALL HAVE A MAXIMUM SLUMP OF 5"
MINIMUM CONCRETE COVER FOR POURED IN PLACE CONCRETE SHALL BE AS FOLLOWS:
SLAB ON GRADE 1"
FOUNDATIONS / FOOTINGS
BOTTOM 3"
SIDES 2"
SUSPENDED SLABS: 1"
COLUMNS & BEAMS 1 1/2" TO THE TIES
MAXIMUM AGGREGATE SIZE SHALL BE 3/4". ALL AGGREGATE SHALL CONFORM TO ASTM C-33. HOLLOW CONCRETE MASONRY UNITS SHALL CONFORM TO ASTM C-90-667 SPECIFICATIONS. MORTAR USED TO BOND C.M.U. SHALL CONFORM TO ASTM C-476, TYPE "m" WITH A 28 DAY STRENGTH OF 2500 PSI. LAY ALL MASONRY WITH FULL FACE HEAD JOINTS AND WITH FACE SHELL MORTAR BEDDING. VERTICAL CELLS FOR MASONRY TO BE GROUTED SHALL HAVE VERTICAL ALIGNMENT SUFFICIENT TO MAINTAIN A CLEAR, UNOBSTRUCTED CONTINUOUS CELL. ALL REINFORCING STEEL SHALL BE GRADE 60, MEETING ASTM SPECS A-615. REINFORCING STEEL SHALL BE FREE FROM OIL, LOOSE SCALE, AND RUST. ALL DOWELS, SLEEVES, CONDUITS, INSERTS, BLOCKOUTS, ANCHOR BOLTS AND DRAINS SHALL BE IN PLACE BEFORE CONCRETING. FOR OPENINGS AND SPECIAL FEATURES OMITTED ON THESE PLANS, SEE ARCHITECTURAL AND/OR MECHANICAL DRAWINGS.
MINIMUM CONCRETE PROTECTION FOR REINFORCING BARS:
LAP REINFORCING STEEL 30 BAR DIAMETERS MINIMUM, WHEN SPLICED AND SHALL BE SEPARATED BY ONE BAR DIAMETER OR WIRED TOGETHER. SLAB SHALL BE A MINIMUM 4" THICK AND SHALL BE REINFORCED WITH 6" X 6" X 1.4/1.4 WELDED WIRE MESH, CENTERED IN CONCRETE DOUBLED 30" AT THE PERIMETER. SCRAPE SLAB AREA CLEAR OF ALL ORGANIC MATERIAL AND FILL WITH CLEAN SAND TO THE ELEVATION OF THE BOTTOM OF THE SLAB. SURFACE MATERIAL CAN BE USED AS SITE FILL.

THE ENTIRE AREA PLUS AN ADDITIONAL THREE FOOT AT PERIMETER, SHALL BE THOROUGHLY COMPACTED BY AT LEAST TEN OVERLAPPING PASSES IN PERPENDICULAR DIRECTIONS OF A VIBRATORY COMPACTOR TO ACHIEVE A MINIMUM OF 95% OF MAXIMUM DENSITY AS DETERMINED IN ACCORDANCE WITH AASHTO-180C OR ASTM-D1557. IF FOOTINGS ARE EXCAVATED AFTER THE BUILDING AREA COMPACTION, THEN ALL FOOTING BEARING LEVELS SHALL ALSO BE COMPACTED TO A MINIMUM OF 95% OF MAXIMUM DENSITY USING A HAND OPERATED VIBRATORY COMPACTOR. EXISTING STRUCTURE SHALL BE CONTINUOUSLY MONITORED DURING SOIL COMPACTION. ANY ADDITIONAL FILL PLACED ON THE BUILDING PAD AREA SHALL BE COMPACTED TO A MINIMUM DENSITY OF 95% OF THE T-180 MODIFIED PROCTOR, IN LIFTS NOT TO EXCEED 10" EACH. THE AREA OF THE BOTTOM OF THE FOOTINGS SHALL BE COMPACTED, PRIOR TO PLACEMENT OF STEEL, WITH A VIBRATORY COMPACTOR TO INSURE UNIFORM DENSITY BENEATH THE FOOTING. DENSITY TESTS SHALL BE TAKEN IN THE FOOTING AREAS.

SOIL SHALL BE TREATED FOR TERMITES FOR A MIN. DISTANCE OF FOUR (4) FEET BEYOND THE PERIMETER OF ALL FOOTINGS AND/OR SLAB EDGES.
ALL PLATES, ANGLES AND MISCELLANEOUS METAL ITEMS TO BE EMBEDDED IN CONCRETE SHALL BE SECURELY AND ACCURATELY FASTENED TO THE CONCRETE FORM WORK BY A MINIMUM OF TWO (2) FASTENERS PRIOR TO CONCRETE PLACEMENT.
BUNDLE ALL STRUCTURAL BEAM TOP BARS IN PAIRS OVER SUPPORT WITH TOP BARS FROM ADJACENT BEAM. ALL TIE BEAM REINFORCING SHALL EXTEND INTO SPAN OF ANY ADJACENT STRUCTURAL BEAM.
ALL ADDED LONGITUDINAL STEEL REINFORCING SHALL EXTEND 6" MINIMUM INTO SUPPORT U.O.N.

STRUCTURAL-STEEL

DESIGN, FABRICATION AND ERECTION OF STRUCTURAL STEEL SHALL CONFORM TO THE LATEST AISC SPECIFICATIONS. ALL STEEL SHALL CONFORM TO ASTM 136, SHOP CONNECTIONS SHALL BE WELDED. FIELD CONNECTIONS SHALL BE 325 HIGH STRENGTH BOLTS AT COLUMNS, TRUSS CONNECTIONS AND ALL OTHER CONNECTIONS. HIGH STRENGTH BOLTS SHALL BE INSTALLED USING CALIBRATED TORQUE WRENCHES. TURN OF NUT METHOD WILL NOT BE ACCEPTED. BEAM TO BEAM CONNECTIONS SHALL BE BOLTED WITH STANDARD WASHERS UNDER NUTS. ALL BOLTS SHALL BE 3/4" DIAMETER U.O.N. PROVIDE 9/16" DIA. HOLES, 4'-0" O.C. MAX. FOR ALL WOOD BLOCKING ATTACHED TO STEEL. CUTS, HOLES, COPES, ETC... REQUIRED IN STEEL MEMBERS BY OTHER TRADES SHALL BE SHOWN ON STEEL SHOP DRAWINGS AND MADE IN THE SHOP. BURNING OF HOLES OR CUTS IN STEEL MEMBERS WILL NOT BE PERMITTED UNLESS SPECIFICALLY APPROVED BY THE STRUCTURAL ENGINEER. ALL LEVELING AND BEARING RATES, ANCHOR BOLTS (EXCEPT FOR WOOD), AND LOOSE LINTELS SHALL BE FURNISHED BY STEEL CONTRACTOR. ALL BEAMS SHALL BE FABRICATED WITH NATURAL CAMBER UP. STEEL CONTRACTOR SHALL CHECK ANCHOR BOLT LOCATION PRIOR TO ERECTION AND NOTIFY GENERAL CONTRACTOR OF ANY DISCREPENCIES SO THAT RELOCATION CAN BE MADE WITHOUT IMPEDING THE PROGRESS OF THE WORK. STRUCTURAL WELD SIZE SHALL BE 1/4" MIN. STRUCTURAL STEEL SHALL RECIEVE SHOP COATING OF ZINC CHROMATE. PROVIDE 1 COAT (TWO MILS THICK) WHERE EXPOSED. PROVIDE 2 COATS (4 MILS THICK) WHERE IMBEDDED IN MASONRY.

CONCRETE

FOLLOW THE STANDARDS OF ACI-316, ACI-301 AND ACI-347.
CONCRETE IS TO BE A MIX DESIGNED IN ACCORDANCE WITH ASTM C-94-72 TO ACHIEVE A STRENGTH IN 28 DAYS AS STATED BELOW, WITH A PLASTIC AND WORKABLE MIX. A CERTIFICATE OF MANUFACTURER'S MIX AND STRENGTH IS TO BE PROVIDED. NO WATER IS TO BE ADDED AFTER THE TRUCK LEAVES THE PLANT, WITHOUT APPROVAL OF THE ENGINEER OR PLANT ENGINEER. PLANT CONTROL SHALL BE REQUIRED. MAXIMUM MIX TIME AT POINT OF DEPOSIT IS 90 MINUTES. MINIMUM COMPRESSIVE STRENGTH AT 28 DAYS SHALL BE AS FOLLOWS, UNLESS OTHERWISE NOTED (UON).
SLAB ON COMPACTED FILL = 3000 PSI
STRUCTURAL SLABS = 4000 PSI
FOUNDATIONS = 3000 PSI
COLUMNS AND BEAMS = 4000 PSI (U.O.N.)
BEAMS = 4000 PSI (U.O.N.)
CONCRETE SHALL HAVE A MAXIMUM SLUMP OF 6"
MAXIMUM AGGREGATE SIZE SHALL BE ¾". ALL AGGREGATE SHALL CONFORM TO ASTM-33.
MAXIMUM WATER CONTENT SHALL BE 33 GALLONS PER CUBIC YARD OF CONCRETE.
MINIMUM CONCRETE PROTECTION FOR REINFORCING BARS:
FOOTINGS = 3" BEAMS = 1 ½" SUSPENDED SLABS = 1"
SLAB SHALL BE A MIN IMUM OF 4" THICK AND SHALL BE REINFORCED WITH 6"x6" x1.4/1.4 W.W.M. CENTERED IN CONCRETE AND DOUBLED AT PERIMETER. REINFORCEMENT SHALL COMPLY WITH ASTM A615 AND ASTM A185 FOR WELDED WIRE FABRIC.
ANY ADDITIONAL FILL PLACED ON THE BUILDING PAD SHALL BE COMPACTED TO A MINIMUM DENSITY OF 95% OF THE T-180 MODIFIED PROCTOR TEST. THE AREA OF THE BOTTOM OF THE FOOTINGS SHALL BE COMPACTED PRIOR TO THE PLACEMENT OF STELL WITH A VIBRATORY COMPACTOR TO INSURE UNIFORM DENSITY BENEATH THE FOOTING. DENSITY TESTS SHALL BE TAKEN IN FOOTING AREAS.
SLAB SHALL BE PLACED OVER ONE LAYER OF 6 MIL. VISQUEEN VAPOR BARRIER.
ALL TIE BEAM REINFORCING SHALL EXTEND INTO SPAN OF ANY ADJACENT STRUCTURAL BEAM.

REINFORCEMENT CLEARANCE
CLEARANCE OF REINFORCING STEEL FROM FACE OF CONCRETE TO THE OUTERMOST BAR SHALL BE AS FOLLOWS, WHEREVER PRACTICAL, UNLESS OTHERWISE NOTED ON STRUCTURAL DRAWINGS.

FORMED CONCRETE IN CONTACT WITH GROUND	2"
BEAMS AND COLUMNS	1 1/2"
SLABS	1"
FOOTINGS	2" FROM TOP, 3"BOTTOM/SIDES
TIE COLUMNS	1 1/2" TO TIES

POLYETHYLENE SHEET

POLYETHYLENE SHEET SHALL BE PLACED CONTINUOUSLY UNDER CONCRETE SLABS ON GROUND AND SHALL BE A MINIMUM OF 6 MIL. THICK. ALL JOINTS SHALL BE LAPPED MINIMUM 12" AND CONTINUOUSLY TAPED WITH A MINIMUM OF 2" WIDE VINYL TAPE. POLYETHYLENE SHEET SHALL EXTEND AT LEAST ONE INCH ONTO STEM WALL. WHERE PIPES, CONDUITS, STAKES, REINFORCING BARS OR OTHER OBJECT PASS THGROUGH THE MEMBRANE, THE MEMBRANE SHALL BE FITTED WITHIN 2" AND SEALED WITH TAPE. SOIL SHALL BE TREATED FOR TERMITES FOR A DISTANCE OF FOUR FEET BEYOND THE PERIMETER OF ALL FOOTINGS AND/OR SLAB EDGES.

CALCULATIONS FOR VENTILATION:

BASED ON A .015 STATIC PRESSURE, 60 SQUARE INCHES FOR EACH CAR IN A DWELLING WILL PROVIDE THE NECESSARY 100 Cfm PER CAR W/ A 7.5 Mph WIND.
VELOCITY @ 7.5 mph = 7.5 x 5280 / 60 = 660 FPM. FREE CFM = 60/144 x 660 - 275 Cfm FREE FLOW.

CONCRETE SLABS ON GRADE:

ALL INTERIOR AND EXTERIOR SLABS AND WALKWAYS AS SHOWN ON THE STRUCTURAL OR ARCHITECTURAL PLANS, SHALL BE FOUR INCHES THICK MINIMUM REINFORCED WITH 6 X 6 - W1.4 X W1.4 WELDED WIRE FABRIC (UNLESS OTHERWISE NOTED).
ALL SLABS ON GRADE TO BE CONSTRUCTED IN ACCORDANCE WITH LATEST A.C.I - "GUIDE FOR CONCRETE FLOOR AND SLAB CONSTRUCTION" (A.C.I. - 302.1R).
JOINTS SHALL BE PROVIDED IN ALL INTERIOR SLABS ON GRADE AT COLUMN CENTER-LINES DIVIDING THE SLAB INTO SQUARE PANELS NOT TO EXCEED 20 X 20 FT. IN SIZE. CAST SLAB IN LONG ALTERNATE STRIPS. PROVIDE A CONTRACTION JOINT BETWEEN EACH STRIP. SEE PLAN FOR SAW-CUT, CONTRACTION AND ISOLATION JOINT DETAILS.
PROVIDE SAW-CUT JOINTS AT ALL SIDEWALKS AT A MAXIMUM SPACING OF FIVE FEET ON CENTERS AND ISOLATION JOINTS AT 20 FEET O.C. (U.O.N.).
FILL MATERIAL SHALL BE PLACED IN LIFTS NOT EXCEEDING 12" AND COMPACTED TO 95 % MODIFIED PROCTOR (ASTM D-1557) WITHIN A DISTANCE OF 3 FEET BEYOND ALL FOOTING EDGES. TAKE AT LEAST ONE DENSITY TEST FOR EACH 1,600 SQ.FT. OF AREA AND 12" BELOW SURFACE. SEND RESULTS OF THE TEST TO OWNER, ARCHITECT AND ENGINEER. CONCRETE AND REINFORCING:
ALL REINFORCING TO BE NEW BILLET STEEL CONFORMING TO THE LATEST A.S.T.M. A-615 GRADE 60, FABRICATED IN ACCORDANCE WITH C.R.S.I. MANUAL OF STANDARD PRACTICE AND PLACED IN ACCORDANCE WITH A.C.I. 315 AND C.R.S.I. MANUAL OF STANDARD PRACTICE.
COLUMN REINFORCEMENT: DOWELS TO BE SAME SIZE AND NUMBER AS VERTICAL REBARS ABOVE. LAP 36 BAR DIAMETER OR MINIMUM OF 18 INCHES, U.O.N. PROVIDE RIGID TEMPLETS FOR DOWEL LOCATION. PROVIDE STANDARD HOOKS AT TOP OF ALL VERTICAL REINFORCEMENT AT NONCONTINUOUS COLUMNS (U.O.N.).
ALL DOWELS FOR COLUMNS SHALL BE SECURED IN POSITION PRIOR TO CONCRETING. PUSHING THE DOWELS INTO POSITION IN WET CONCRETE IS NOT PERMITTED.
BEAM REINFORCEMENT: LAPPED 36 BAR DIAMETER OR MINIMUM 18 INCHES (SEE BEAM DIAGRAM ON PLAN). BOTTOM BARS SPLICED ONLY AT SUPPORTS, TOP BARS SPLICED ONLY AT MID-SPAN. ALL TOP BARS HOOKED AT NONCONTINUOUS EDGES (U.O.N.). ALL HOOKS TO BE STANDARD 90 DEGREE HOOKS AS REQUIRED (U.O.N.).
ADDED REINFORCEMENT: PROVIDE ADDITIONAL CORNER BARS BENT 36 INCHES MINIMUM EACH WAY AT "L" AND "T" CORNERS IN OUTER FACES OF ALL BEAMS TO MATCH ALL HORIZONTAL BAR (TOP, BOTTOM AND INTERMEDIATE REBARS). 10. SEE STRUCTURAL PLANS FOR MIN. SIZE CONCRETE TIE BEAM REQUIREMENTS.

MASONRY

ALL BLOCK WALLS SHALL BE TWO-CELL HOLLOW CONCRETE MASONRY REGULAR SIZE BLOCK MANUFACTURED IN CONFORMANCE WITH ASTM C-90 'STANDARD SPECIFICATIONS FOR HOLLOW LOAD BEARING CONCRETE MASONRY UNITS' , GRADE N, f'm = 1500 PSI. BLOCK SHALL BE PLACED USING RUNNING BOND UNLESS OTHERWISE NOTED. LAY-UP MASONRY WALLS TO BOTTOM OF TIE BEAMS BEFORE PLACING CONCRETE FOR IN-WALL COLUMNS. GROUT USED TO FILL MASONRY CELLS IS TO COMPLY WITH ASTM C-476 AND SHALL PROVIDE A MINIMUM COMPRESSIVE STRENGTH OF 3,000 PSI AT 28 DAYS. THE GROUT MIX SHALL HAVE A MAXIMUM OF 3/8" COURSE AGGREGATE, AND SHALL BE PLACED WITH A SLUMP OF 8" TO 10" . USE ONLY MECHANICAL VIBRATION TO CONSOLIDATE GROUT. TYPE 'S' MORTAR SHALL BE USED EXCLUSIVELY ON THIS PROJECT. MORTAR SHALL BE PROPORTIONED AND MIXED AS OUTLINED IN ASTM C-270.HORIZONTAL AND VERTICAL MORTAR JOINTS SHALL BE 3/8" THICK UNLESS OTHERWISE NOTED. REMOVE MORTAR PROTRUSIONS THAT EXTEND INTO CELLS TO BE FILLED AND ALLOW A MINIMUM OF 72 HOURS FOR MORTAR TO CURE PRIOR TO GROUTING CELLS. CLEAN OUT OPENINGS SHALL BE PROVIDED AT THE BOTTOM OF THE GROUTED CELLS AT EACH LIFT. CLEAN OUTS SHALL BE SEALED AFTER CLEANING AND INSPECTION AND BEFORE GROUTING. GROUT LIFT SHALL NOT EXCEED 4'
ALL REINFORCING STEEL SHALL BE GRADE 60, MEETING ASTM SPECIFICATION A-615. REINFORCING STEEL SHALL BE FREE FROM OIL, LOOSE SCALE AND RUST.
MASONRY CONSTRUCTION AND MATERIALS SHALL CONFORM WITH ALL REQUIREMENTS OF THE "SPECIFICATIONS FOR MASONRY STRUCTURES" (ACI-530.1-99/ASCE 6-99/ACSE/TMS 602-99), AS PUBLISHED BY THE MASONRY STANDARDS JOINT COMMITTEE.
MASAONRY CONSTRUCTION SHALL BE PERFORMED UNDER THE DIRECT SUPERVISION OF A "CERTIFIED STRUCTURAL MASONRY CONTRACTOR". THE SUPERVISOR OF THE MASONRY PORTION OF THIS PROJECT SHALL BE A "CERTIFIED STRUCTURAL MASONRY CONTRACTOR" OR A "CERTIFIED STRUCTURAL MASON" . THE SENIOR MASONRY SUPERVISOR WILL BE RESPONSIBLE TO ASSURE THAT THE WORK IS ACCOMPLISHED IN ACCORDANCE WITH THE CONTRACT DOCUMENTS.
WHENEVER ANCHOR BOLTS ARE TO BE SET IN MASONRY, FILL TWO ADJACENT WITH CONCRETE GROUT. ALL GROUT SHALL BE FLUID, SLUMP SHALL BE 9" +- 1"

LINTELS AND SILLS

ANY CMU WALL OPENINGS WHICH ARE NOT OTHERWISE FRAMED SHALL HAVE 8"x8" (NOMINAL) CONCRETE LINTELS & SILLS REINFORCED WITH 2 #5 BOTTOM, MINIMUM OF 8" BEARING BOTH ENDS , UNLESS OTHERWISE NOTED.
HORIZONTAL REINFORCEMENT EVERY OTHER COURSE 9 GAUGE GALVANIZED LADDER TYPE DUR-O-WALL (OR EQUAL)

WOOD TRUSS NOTES

LUMBER DESIGN LOADS ROOF LIVE LOAD = 30 PSF SUPERIMPOSED DEAD LOAD = 25 PSF FLOOR, LIVING AREAS (DL + LL) = 60 PSF, (BALCONY = 125 PSF)
ALL LUMBER SHALL BE DOUGLAS FIR WITH A MINIMUM FIBER STRESS OF 1200 PSI, OR SOUTHERN PINE #2 STRUCTURAL GRADE, U.O.N. HATCHED WALLS INDICATE BEARING FRAME PARTITIONS AND SHALL HAVE 2 X STUDS AT 16" O/C WITH DOUBLE TOP PLATE. ALL EXTERIOR AND INTERIOR STUD WALLS AS NOTED SHALL BE BRACED WITH 16 GAUGE GALVANIZED METAL TIES ON A V FORM FROM BOTTOM TO TOP PLATE. ATTACH BRACES TO TOP AND BOTTOM PLATES WITH 2 - 16 PENNY NAILS. FOR INTERMEDIATE NAILING USE 10 PENNY NAILS. TRUSS MANUFACTURER SHALL SUBMIT FOUR (4) SETS OF TRUSS LAYOUT PLANS AND ENGINEERING SHOP DRAWINGS TO ARCHITECT FOR REVIEW AS TO COMPLIANCE WITH DESIGN CONCEPT. THE GENERAL CONTRACTOR SHALL BE RESPONSIBLE FOR VERIFYING ALL FIELD DIMENSIONS. ALL WOOD TRUSSES SHALL BE ANCHORED AT BOTH ENDS WITH APPROVED GALVANIZED METAL TRUSS STRAPS. TYPICAL EACH TRUSS. WHEN BEARING ON CONCRETE BEAM, EACH TRUSS MUST HAVE METAL TRUSS SEATS CAST INTO CONCRETE. ALL WOOD TRUSSES TO BE ANCHORED TO BEARING FRAME PARTITION WITH APPROVED GALVANIZED METAL TRUSS STRAPS, TYPICAL EACH TRUSS. ALL WOOD TRUSSES BEARING ON CONCRETE TIE BEAMS, TO HAVE GALVANIZED METAL TRUSS SEATS CAST INTO CONCRETE AT EACH TRUSS TYPICAL. TRUSS MANUFACTURER SHALL COORDINATE TRUSS FABRICATION WITH AIR CONDITIONING DUCT LAYOUT. ALL WOOD IN CONTACT WITH MASONRY, CONCRETE OR STEEL SHALL BE PRESSURE TREATED. HEADERS FOR FRAMED OPENINGS GREATER THAN 6'0" MUST BE ENGINEERED BY TRUSS MANUFACTURER. ALL HEADERS FOR FRAMED OPENINGS LESS THAN 6'0" HAVE BEEN DESIGNED BY RATIONAL ANALYSIS BY THE ENGINEER OF RECORD THE BRACING SHOWN IN PLAN ACTS AS A RIGID CEILING PROVIDE REQUIRED DRAFTSTOPS IN TRUSS SPACE.

PRE-FABRICATED WOOD TRUSSES

TRUSS MANUFACTURER IS RESPONSIBLE FOR THE DESIGN AND FABRICATION OF TRUSSES, GIRDERS, AND THEIR CONNECTIONS TO EACH OTHER. DESIGN FOR BRACING OF INDIVIDUAL TRUSS OR GIRDER MEMBERS TO RESIST LATERAL BUCKLING UNDER GRAVITY OR WIND LOADS IS THE RESPONSIBILITY OF THE TRUSS MANUFACTURER.

(DELEGATED ENGINEERING SHOP DRAWINGS REQUIRED)
THE BUILDING CODE REQUIRES THE ENGINEER-OF-RECORD TO INCLUDE WITH ALL RECORD PLANS COMPLETE TRUSS FRAMING PLANS, INCLUDING ALL CONNECTIONS AND LOADING DATA, TO THE BUILDING DEPARTMENT FOR PERMIT. THE TRUSS DESIGN DELEGATED ENGINEER MUST FOLLOW THE LAYOUT OF THE TRUSSES AND GIRDER- TRUSSES, AS SHOWN ON THE STRUCTURAL FRAMING PLANS. DESIGNED AND FABRICATED IN ACCORDANCE WITH "NATIONAL DESIGN SPECIFICATIONS FOR STRESS GRADE LUMBER AND ITS FASTENERS" BY NFPA (LATEST EDITION)
TRUSSES SHALL BE DESIGNED, SIGNED AND SEALED BY A FLORIDA REGISTERED PROFESSIONAL ENGINEER, WHO MAY BE ASSIGNED AS A DELEGATED ENGINEER FOR THE CONTRACTOR. THE DELEGATED ENGINEER SHALL DESIGN AND INDICATE ON THE SHOP DRAWINGS ALL TRUSS COMPONENTS, TEMPORARY BRACING, BRIDGING, HARDWARE, METAL HANGERS, ANCHORS AND METAL SHAPES AS REQUIRED BY DESIGN OR AS INDICATED ON THE PLANS. ALL METAL PARTS ARE TO BE GALVANIZED.
SHOP DRAWINGS SHALL COMPLY WITH THE CURRENT BUILDING CODES, REGARDING MODIFICATION OF THE FRAMING (FROM THE ONE SHOWN ON THE STRUCTURAL PLANS), INDICATING ALL PERMANENT BRACING (AS SHOWN ON THE STRUCTURAL PLANS) AND INDIVIDUAL MEMBER BRACING.
THE STRUCTURAL PLANS INDICATE ALL THE REQUIRED LATERAL PERMANENT BRIDGING, AS RECOMMENDED BY THE "TRUSS PLATE INSTITUTE". TRUSS DESIGNER ENGINEER SHALL PROVIDE INFORMATION AND SHOW ON PLAN, ALL LATERAL BRACING OF ANY TRUSS INDIVIDUAL MEMBERS, AS REQUIRED BY TRUSS DESIGN.
TRUSSES SHALL BE INSTALLED WITH OUT OF PLUMB AND OUT OF PLANE TOLERANCES, AS PER THE "TRUSS PLATE INSTITUTE" (SHOWN ON THE ROOF PLAN). ANY TRUSS EXCEEDING THE SPECIFIED TOLERANCE MUST BE REALIGNED OR REPLACED.
INSTALLATION OF TRUSSES LONGER THAN 35 FT. OR HIGHER THAN 6 FT. SHALL BE MADE UNDER THE DIRECT SUPERVISION OF A LICENSED BUILDING OR GENERAL CONTRACTOR OR A LICENSED STRUCTURAL ENGINEER OR ARCHITECT.

PLYWOOD ROOF DIAPHRAGM:

ROOF DIAPHRAGM SHALL COMPLY WITH THE DESIGN RECOMMENDATIONS OF "A.P.A. DESIGN/CONSTRUCTION GUIDE - DIAPHRAGMS".
PLYWOOD ROOF DECKING SHALL BE 19/32" MINIMUM THICKNESS, "CDX" TYPE AND SHALL BE CONTINUOUS OVER TWO OR MORE SPANS, WITH FACE GRAIN PERPENDICULAR TO THE SUPPORTS. CONNECT PLYWOOD DIAPHRAGM TO STRUCTURE WITH 10d GALV. NAILS, SPACED AT 6" O.C. MAX. AT SUPPORTED EDGES AND AT 6" O.C. ALONG THE INTERMEDIATE SUPPORTS.
GABLE ENDS NAIL SPACING SHALL BE 4" ON CENTERS MAXIMUM. STRUCTURAL WOOD:
TO CONFORM TO RULES OF THE MANUFACTURER'S ASSOCIATION UNDER WHOSE RULES THE LUMBER IS PRODUCED. (SEE SUPPLIER'S SPECIFICATIONS).
TO BE AIR DRIED, WELL SEASONED AND GRADE MARKED AT MILL.
TO BE NO. 2 SOUTHERN PINE, UTILITY GRADE DOUGLAS FIR OR WEST COAST HEMLOCK.
ALL STRUCTURAL WOOD TO BE SURFACED FOUR (4) SIDES (S-4-S) WITH A MINIMUM FIBER STRESS IN BENDING OF 1,200 P.S.I. AND A MAXIMUM MOISTURE CONTENT OF 19 PERCENT.
ALL LUMBER AND PLYWOOD IN CONTACT WITH CONCRETE, STUCCO, MASONRY OR OTHER CEMENTITIOUS MATERIALS SHALL BE TREATED TO COMPLY WITH AWPA STANDARD LP-2.
STORE ALL LUMBER ABOVE GRADE OR FLOOR. STACK TO ALLOW PROPER AIR CIRCULATION AND PROTECT FROM WETTING WITH SUITABLE COVER.

MECHANICAL

H.V.A.C. CONTRACTOR SHALL SUBMIT FULLY ENGINEERED H.V.A.C. SHOP DRAWINGS TO THIS ARCHITECT'S OFFICE AND TO THE BUILDING DEPARTMENT FOR APPROVAL PRIOR TO CONSTRUCTION. ALL WORK SHALL BE PERFORMED BY A LICENSED CONTRACTOR, IN A FIRST CLASS WORKMANSHIP MANNER. THE COMPLETED SYSTEM SHALL BE FULLY OPERABLE AND ACCEPTANCE BY THE ENGINEER SHALL BE A CONDITION OF THE SUB-CONTRACT. CONTRACTOR SHALL VISIT THE JOB SITE AND THOROUGHLY FAMILIARIZE HIMSELF WITH ALL EXISTING CONDITIONS. ALL WORK SHALL BE COORDINATED WITH OTHER TRADES TO AVOID INTERFERENCE WITH THE PROGRESS OF CONSTRUCTION. ALL REQUIRED INSURANCE SHALL BE PROVIDED BY THE CONTRACTOR FOR PROTECTION AGAINST PUBLIC LIABILITY AND PROPERTY DAMAGE FOR THE DURATION OF THE WORK. THE CONTRACTOR SHALL FURNISH ALL LABOR, MATERIALS AND EQUIPMENT SHOWN OR INDICATED FOR A COMPLETE H.V.A.C. SYSTEM IN STRICT ACCORDANCE WITH ALL CODES, AND THE AGENCIES HAVING JURISDICTION OVER THE PROJECT, AND ALSO THE LATEST EDITION WITH REVISIONS OF THE FOLLOWING PUBLICATIONS:

A.N.S.I. B9.1 MECHANICAL REFRIGERATION N.F.P.A. PAMPHLETS 90A, 90B AND 91
S.M.A.C.N.A.
A.S.H.R.A.E.
LOCAL, STATE AND NATIONAL CODE, rULES, REGULATIONS AND ORDINANCES

ALL MATERIALS SHALL BE NEW AND BEAR U.L. LABELS, WHERE APPLICABLE. ALL AIR CONDITIONING DUCTS SHALL BE 1" THICK, 3 1/2" P.C.F. R-6 FIBERGLASS WITH VAPOR BARRIER JACKET, UNLESS OTHERWISE NOTED. FABRICATE AND INSTALL ALL DUCTS IN STRICT ACCORDANCE WITH THE MANUFACTURER'S PUBLISHED INSTRUCTIONS. DUCT SIZES ARE NET INTERNAL. ALL FRESH AIR EXHAUST AIR DUCTS SHALL HAVE AN ADJUSTABLE DAMPER AT GRILLS AND OR FANS. DUCTS FOR EXHAUST AIR OR FRESH AIR SHALL BE GALVANIZED SHEET METAL WRAPPED WITH MINIMUM 1" R-6 FIBERGLASS BATT OR BLANKET INSULATION. MOUNT ALL THERMOSTATS AT +4'-0" ABOVE FLOOR. ALL INTERIOR AND EXTERIOR MOUNTED H.V.A.C. EQUIPMENT SHALL BE SECURELY FASTENED IN PLACE WHERE SHOWN ON THE DRAWINGS AS REQUIRED BY THE LOCAL BUILDING CODES. THE H.V.A.C. CONTRACTOR SHALL PROVIDE SHOP DRAWINGS OF ALL OF THE ABOVE FOR APPROVAL. CONTRACTOR SHALL INSTALL ALL EQUIPMENT AND ACCESSORIES IN SUCH A MANNER THAT THEY MAY BE READILY ACCESSIBLE FOR SERVICING AND OR REPLACEMENT. H.V.A.C. CONTRACTOR SHALL BE RESPONSIBLE FOR BALANCING THE H.V.A.C. SYSTEM AND FOR PRINTING INSTRUCTIONS FOR THE OWNER'S OPERATION OF THE SYSTEM. ELECTRIC STRIP HEATERS SHALL BE UNIT-MOUNTED, COMPLETE WITH FUSES, HI-TEMP CUTOUTS (AUTOMATIC AND MANUAL), RELAYS AND ETC, WITH SIZES ARE REQUIRED. PROVIDE FIRE DAMPERS IN ALL DUCTS PASSING THRU FIRE RATED ROOF, CEILINGS AND WALLS, UNLESS OTHERWISE NOTED AND OR SHOWN ON THE PLANS AND/OR AS REQUIRED BY THE AUTHORITY HAVING JURISDICTION.\ ALL HEATING, VENTILATING AND AIR CONDITIONING SYSTEMS AND ETC. SHALL CONFORM TO THE STATE OF FLORIDA MODEL ENERGY EFFICIENCY CODE FOR BUILDING CONSTRUCTION, LATEST EDITION WITH REVISIONS. A/C AIR HANDLING UNITS SHALL HAVE CONDENSATION SAFE WASTE W/TRAP.

ELECTRICAL NOTES

THE DRAWINGS ARE DIAGRAMMATIC AND INDICATE THE GENERAL ARRANGEMENT OF THE ELECTRICAL WORK. ANY DISCREPANCIES ON THE DOCUMENTS SHALL BE CALLED TO ARCHITECT ATTENTION PRIOR TO COMMENCEMENT OF WORK. DO NOT SCALE ELECTRICAL DRAWINGS. ALL WORK SHALL BE DONE IN ACCORDANCE WITH THE LATEST EDITION OF THE NATIONAL ELECTRICAL CODE AND ALL CODES, REGULATIONS AND RESTRICTIONS HAVING JURISDICTIONS. DISCONNECT SWITCHES SHALL BE H.P. RATED, HEAVY-DUTY, QUICK-MADE, QUICK-BREAK ENCLOSURES AS REQUIRED BY EXPOSURE. OUTLET BOXES SHALL BE PRESSED STEEL IN DRY LOCATIONS, CAST ALLOY WITH THREADED HUBS IN WET AND DAMP LOCATIONS AND SPECIAL ENCLOSURES FOR OTHER CLASSIFIED LOCATIONS. ELECTRICAL SYSTEM SHALL BE GROUNDED. PROVIDE PROPER SIZE AND TYPE OF PROTECTION DEVICES TO MATCH EQUIPMENT BEING SERVED. LOAD DATA IS BASED ON INFORMATION GIVEN TO ARCHITECT/ENGINEER AT TIME OF DESIGN. VERIFY ALL EQUIPMENT AND PANEL SIZES PRIOR TO ORDERING. ALL MATERIALS SHALL BE NEW AND BEAR U.L. AND UNION LABELS, WHERE APPLICABLE. ALL WORK SHALL BE DONE BY A LICENSED ELECTRICAL CONTRACTOR IN A FIRST CLASS WORKMANLIKE MANNER. THE COMPLETED SYSTEM SHALL BE FULLY OPERATIVE AND ACCEPTABLE TO THE ENGINEER/ARCHITECT. ALL WORK SHALL BE COORDINATED WITH OTHER TRADES TO AVOID INTERFERENCE WITH PROGRESS OF CONSTRUCTION. CONTRACTOR SHALL PROVIDE REQUIRED INSURANCE FOR THE PROTECTION AGAINST PUBLIC LIABILITY AND PROPERTY DAMAGE FOR THE DURATION OF THE WORK. CIRCUITS SHOWN ON PLANS ARE TO DETERMINE LOAD DATA AND PANEL SIZES. THE CONTRACTOR SHALL PROVIDE CIRCUITS AND REQUIRED ROUTING OF CONDUITS TO SUIT JOB CONDITIONS AND BALANCE LOADS. FURNISH AND INSTALL FIXTURES AS CALLED FOR ON PLANS OR AS SELECTED BY OWNER. THE ELECTRICAL CONTRACTOR SHALL COORDINATE THE EXACT LOCATION OF ALL H.V.A.C. EQUIPMENT AND THEIR GIVEN LOAD WITH THE MECHANICAL CONTRACTOR BEFORE ROUGHING-IN FOR PROPER POWER AND WIRING CONTROL LAYOUT AND INSTALLATION. ANY DISCREPANCIES BETWEEN THE GIVEN AND ACTUAL H.V.A.C. LOADS SHALL BE CORRECTED BEFORE ROUGHING IN. GROUND-FAULT CIRCUIT PROTECTION; ALL 120V SINGLE PHASE, 15 AND 20 AMP OUTLETS INSTALLED OUTDOORS, BATHROOMS AND GARAGE SHALL HAVE GROUND-FAULT CIRCUIT INTERRUPTER CIRCUIT BREAKER OR RECEPTACLES. ALL BREAKERS SHALL HAVE 10,000 A.I.C. MINIMUM, U.O.N. INSTALL FACILITIES FOR TEMPORARY POWER FOR CONSTRUCTION AS REQUIRED. ELECTRICAL CONTRACTOR SHALL NOTIFY ENGINEER/ARCHITECT IN WRITING OF ANY CONFLICT AND/OR DISCREPANCIES FOUND WITH WORK AS SHOWN, SPECIFIED OR IMPLIED ON THESE PLANS, PRIOR TO PROCEEDING WITH WORK IN QUESTION. CONTRACTOR SHALL VERIFY EXACT LOCATIONS OF FIXTURES AND OUTLETS AT JOB SITE BEFORE ROUGHING. ALSO MAY SELECT DIFFERENT MANUFACTURER OR FIXTURES WITH EQUAL SPECIFICATIONS. SMOKE DETECTORS SHALL BE HARD WIRED (110 VOLT TYPE) TO NON- SWITCHABLE KITCHEN OR BATHROOM LIGHTING CIRCUIT AND SHALL NOT BE CONNECTED ONTO THE LOAD SIDE OF A GROUND FAULT CIRCUIT INTERRUPTER. SMOKE DETECTORS SHALL BE LOCATED ON OR NEAR THE CEILING IN THE IMMEDIATE VICINITY OUTSIDE OF EACH SLEEPING AREA AND ON EACH ADDITIONAL FLOOR LEVEL (STORY) AND BASEMENTS INCLUSIVE. BEDROOM ADDITIONS TO EXISTING DWELLINGS WILL BE SUBJECT TO THE SAME REQUIREMENTS. SMOKE DETECTORS SHALL BE 110 VOLT TYPE, PROVIDED WITH VISIBLE "POWER ON INDICATOR" AND A TEST BUTTON WITH BATTERY BACKUP SYSTEM. MULTIPLE DETECTORS MUST BE INTERCONNECTED. CONTRACTOR SHALL VERIFY WITH LOCAL ELECTRICAL UTILITY COMPANY THE LOCATION OF SERVICE AND SHALL LOCATE METER AND PANEL AS REQUIRED. VERIFY ALL CONDUCTORS AND BREAKERS W/ EQUIPMENT MANUFACTURER'S SPECIFICATIONS. COORDINATE RACEWAY INSTALLATION WITH OTHER TRADES PRIOR TO CONSTRUCTION. ALL ELECTRICAL SWITCHES SHALL BE 48" A.F.F. UNLESS OTHERWISE NOTED. ALL RECEPTACLES SHALL BE 12" A.F.F. UNLESS OTHERWISE NOTED.
THE ELECTRICAL CONTRACTOR SHALL SECURE ALL PERMITS AND INSPECTIONS REQUIRED BY STATE AND LOCAL LAWS AND ORDINANCES.
ALL PANELS SHALL HAVE CIRCUIT DIRECTORY CLEARLY LABELED AND MOUNTED INSIDE THE DOOR.
PROVIDE GROUNDING SYSTEM FOR ALL TELEPHONE OUTLETS AND EQUIPMENT PER REQUIREMENTS OF THE TELEPHONE COMPANY.
COORDINATE THE INSTALLATION OF ALL TELEPHONE OUTLETS, RACEWAYS, ENCLOSURES AND BACKBOARDS WITH THE TELEPHONE COMPANY.
TELEPHONE CONDUITS SHALL NOT BE INSTALLED IN THE SAME TRENCH WITH POWER AND LIGHTING CONDUITS.
COORDINATE ALL ELECTRICAL SITE WORK WITH THE GENERAL CONTRACTOR.ALL GARAGE, EXTERIOR, BATHROOM AND KITCHEN RECEPTACLES MUST BE GROUND FAULT CIRCUIT INTERRUPTOR PROTECTED.
ALL BEDROOM SHALL HAVE ARC FAULT INTERRUPTER RECEPTACLES.
PROVIDE A SEPARATE CIRCUIT FOR A PERSONAL COMPUTER. LOCATION TO BE COORDINATED WITH OWNER.

ANCHORAGE

METAL AND WIRE LATH: "PNEU-FAST" 16 GA. STAPLE SPEC. #101-1, TYPE 1 OR BETTER (HOT DIPPED) SATIN FIN. GALVANIZED COATING, HAVING A TENSILE STRENGTH OF 130M PSI. STAPLES SHALL BE MIN. 1 1/2" LONG SPACED AT 4"C/C MAX.

PLUMBING NOTES

FURNISH ALL LABOR, MATERIALS AND EQUIPMENT REQUIRED FOR THE COMPLETION OF THE SOIL, WASTE, VENT, DOMESTIC WATER HEATERS, PLUMBING FIXTURES AND ALL OTHER SYSTEMS AS INDICATED ON THE DRAWINGS.
ALL WORK AND MATERIALS SHALL BE IN STRICT ACCORDANCE WITH ALL LOCAL CODES, RULES AND ORDINANCES HAVING JURISDICTION.
DRAWINGS ARE DIAGRAMMATIC. DO NOT SCALE FOR THE EXACT LOCATION OF FIXTURES, PIPING, EQUIPMENT, ETC. PLUMBING CONTRACTOR SHALL VERIFY ALL SPACE CONDITIONS AND DIMENSIONS AT JOB SITE PRIOR TO FABRICATION AND INSTALLATION OF MATERIALS AND EQUIPMENT.
EXTEND SERVICE TO WATER METER. PROVIDE WATER METER AND SHUTOFF VALVE IN VALVE BOX OUTSIDE BUILDING. CONSULT ARCHITECT FOR LOCATION. LOCATIONS WHERE PIPES PENETRATE WALLS, FLOORS, AND CEILINGS SHALL BE WATERTIGHT. SANITARY PIPES SHALL BE OF HUBLESS CAST IRON OR PVC (SCHEDULE 40) AS APPROVED BY BUILDING OFFICIAL.
CONTRACTOR TO VERIFY AT SITE LOCATION, ALL EXISTING CONDITIONS, ELEVATIONS AND SIZE OF EXISTING MAINS, WATER AND SEWER FOR CONNECTION OF NEW SERVICES BEFORE INSTALLATION OF ANY PIPING.
ALL WORK SHALL BE PERFORMED BY A LICENSED PLUMBING CONTRACTOR, IN A FIRST-CLASS WORKMANLIKE MANNER AND MAKE THE COMPLETED SYSTEM FULLY OPERATIVE. ALL WORK SHALL BE COORDINATED WITH OTHER TRADES TO AVOID INTERFERENCE WITH THE PROCESS OF CONSTRUCTION. ALL REQUIRED INSURANCE SHALL BE PROVIDED FOR PROTECTION AGAINST PUBLIC LIABILITY AND PROPERTY DAMAGE FOR THE DURATION OF THE WORK.
ALL MATERIALS SHALL BE NEW AND SHALL BEAR UNDERWRITERS' AND UNION LABELS WHERE REQUIRED. ALL EXCAVATION AND BACKFILL AS REQUIRED FOR THIS PHASE OF CONSTRUCTION SHALL BE PART OF THIS CONTRACT. UNDERGROUND METAL PIPING SHALL BE PROTECTED WITH A COAT OF BITUMINOUS COMPOUND BEFORE COVERING. "BITUMASTIC" OR EQUAL. ALL UNDERGROUND SOIL AND WASTE PIPING SHALL BE SCHEDULE 40 P.V.C. OR SERVICE WEIGHT CAST IRON WITH MEDIUM WEIGHTS CAST IRON FITTINGS. ALL JOINTS BELOW SLAB TO BE MADE WITH OAKUM AND PURE VIRGIN LEAD. SOIL, WASTE AND VENT PIPING ABOVE SLAB TO BE SAME AS SPECIFIED FOR BELOW SLAB EXCEPT THAT THE CONTRACTOR MAY AT HIS OPTION USE NO-HUM PIPE AND FITTINGS IF ACCEPTABLE BY LOCAL AUTHORITIES.
ISOLATE COPPER PIPE FROM HANGER OR SUPPORT WITH ISOLATOR PAD, SUPER STRUT MODEL C/15/16 (OR EQUIVALENT) OR HAIR FELT LINING. HANGERS FOR COPPER PIPING SHALL BE COPPER OR COPPER PLATED.

ALL PIPING SHALL BE SUPPORTED IN APPROVED MANNER FROM BUILDING STRUCTURE. HANGERS FOR COPPER PIPING SHALL BE COPPER OR COPPER PLATED.
ALL RATED FLOOR AND WALL PENETRATIONS (NO PVC) SHALL HAVE FIRE, SMOKE, AND WATER STOPS BY FILLING VOIDS BETWEEN PIPE AND WALL/FLOOR SLEEVES WITH FIRE RATED FOAM, CHASE TECHNOLOGY CORP. CIC PR 855 OR 3M CP-25 CAULKING OR 303 PUTTY TO ACHIEVE THE SAME FIRE RATING AS WALLS OR FLOORS.
LOCATIONS WHERE PIPES PENETRATE WALLS, FLOORS AND CEILINGS SHALL BE WATERTIGHT.
CONDENSATE DRAIN PIPES SHALL BE A MINIMUM OF 3/4" PVC (SCHEDULE 40) WITH TRAPS, INSULATED WITH 1/2" ARMAFLEX, AND TERMINATED 6" ABOVE GRADE OUTSIDE OF THE BUILDING. FURNISH AND INSTALL PRESSURE RELIEF VALVE LINE AND TERMINATE AT A LOCATION TO PROVIDE READY, VISUAL INDICATION FLOW. COPPER WATER LINES RUNNING UNDER SLAB SHALL BE PROTECTED BY A MINIMUM OF 12 INCHES OF EARTH COVER, 1 INCH AMAFLEX (HOT WATER ONLY) AND SLEEVED 12 INCH BELOW SLAB TO 12 INCHES ABOVE SLAB.
VERIFY ALL DIMENSIONS WITH STRUCTURE PRIOR TO ANY FABRICATION OR INSTALLATION.
ALL FIXTURES SHALL BE PROTECTED AGAINST WATER HAMMER WITH APPROVED AIR CHAMBERS OR SHOCK ABSORBERS. PROVIDE CONTROL VALVES TO ALL MAINS ENTERING THE BUILDING, RISERS, BRANCHES, GROUP OF FIXTURES, AND TO EACH PIECE OF EQUIPMENT.
PROVIDE FULLY ACCESSIBLE CLEANOUTS ON SANITARY AND ANY WASTE PIPING AT BOTTOM OF STACKS. CLEANOUTS LOCATION AND SIZES ON HORIZONTAL LINES SHALL BE ACCORDING TO CODE. VENT LINES TO EXTEND 6" MINIMUM ABOVE ROOF AND FLASH WITH LEAD. PROVIDE AIR CHAMBERS AND SHUT OFF VALVES FOR ALL WATER SUPPLY PIPING AT FIXTURES. PROVIDE VACUUM BREAKER AND SHUT OFF VALVE ON ALL HOSE BIBBS.
ALL HOSE BIBS SHALL BE FURNISHED WITH BACKFLOW PREVENTERS AND MOUNTED 26" ABOVE GRADE.
SANITARY PLUMBING PIPING TO HAVE MIN. 1/8" PER FT. PITCH AT ALL HORIZ. RUNS PROVIDE CLEANOUTS AT THE BASE OF WASTE STACKS.
PROVIDE 1/4" WATER SERVICE TO REFRIGERATOR.
ALL FIXTURES SHALL COMPLY WITH MAXIMUM FLOW RATE OF CONSUMPTION, INSTALL ANTI-SCALD VALVES AS REQUIRED.
LAVATORY 2.5 GPM
SHOWER HEAD 2.5 GPM @ 80 PSI
WATER CLOSET 1.6 GAL. PER FLUSH
SINK FAUCET 2.5 GPM @ 60 PSI
TEST ALL WATER PIPING UNDER A 150 PSI HYDROSTATIC TEST FOR A MINIMUM PERIOD OF TWO HOURS.

LANDSCAPING NOTES

NO MORE THAN 50% OF REQUIRED TREES CAN BE SAME SPECIES.
ALL TREES SHALL BE PROPERLY GUYED AND STAKED AT TIME OF PLANTING.
SOD TO BE ST. AUGUSTINE "FLORITAM" FREE OF ALL PESTS OR DISEASE. IT SHALL BE LAID EVEN WITHOUT GAPS.
GROUND COVER AND SHRUBS TO BE LAID OUT IN A UNIFORM AND CONSISTENT PATTERN.
ALL PLANT MATERIAL SHALL HAVE AN APPLICATION OF SLOW- RELEASE FERTILIZER (AGRI- FORM OR SIMILAR) AT TIME OF INSTALLATION.
CONTRACTOR IS RESPONSIBLE FOR LOCATING ALL UNDERGROUND UTILITIES TO AVOID DAMAGE.
CONTRACTOR SHALL BE RESPONSIBLE FOR ALL PLANTS AND MATERIALS NECESSARY TO ACHIEVE A FULL AND COMPLETED APPEARANCE IN ALL PLANTING BEDS.
THE MINIMUM TOPSOIL DEPTH SHALL BE 6 INCHES FOR GROUND COVER AREAS, 4 INCHES FOR SEEDED GRASS AREAS, AND 2 INCHES FOR SODDED AREAS.
ALL LANDSCAPING MATERIALS TO BE FLORIDA NO. 1 GRADE OR BETTER.
ALL EXTERIOR LIGHT SOURCES MUST BE RECESSED WITHIN THE STRUCTURE OR FIXTURE IN WHICH IS LOCATED.
ALL MECHANICAL EQUIPMENT TO BE SCREENED ON THREE (3) SIDES AS SHOWN WITH SHRUBS SIX (6) INCHES ABOVE THE ITEM TO BE SCREENED.
GRASS OR SOD SHALL BE PROVIDE IN ALL OPEN AREAS. INCLUDING SWALE AREA AS SHOWN ON PLANS.
IT SHALL BE THE RESPONSIBILITY OF THE CONTRACTOR TO ASSURE PROPER WATERING AND SAFEGUARD AGAINST DAMAGE OF ANY KIND DURING THE INSTALLATION UNTIL FINAL APPROVAL OF WORK.
ALL TREE SPECIES SHALL BE A MINIMUM OVERALL HEIGHT OF 10 FEET WITH A MINIMUM CANOPY SPREAD OF 4 FEET AND MINIMUM TRUNK DIAMETER AT BREAST HEIGHT OF 2" AND A MINIMUM OF 4 FEET CLEAR WOOD IMMEDIATELY AFTER PLANTING.
HEDGES SHALL BE MINIMUM 2 FEET IN HEIGHT (FULL TO BASE) PLANTED 2 FEET ON CENTER.
ALL TREES AND SHRUBS SHALL BE PLANTED WITH A MINIMUM OF 6 INCHES OF TOPSOIL AROUND AND BENEATH ROOT BALL.
A MINIMUM OF 2 INCHES CYPRESS MULCH (OR APPROVED EQUAL) OR GROUND COVER SHALL BE INSTALLED AT BASE OF EACH TREE AND THROUGHOUT HEDGE AND SHRUB PLANTING.

SPRINKLERS (IF SPECIFIED)

ALL LANDSCAPE AREAS SHALL BE IRRIGATED BY A FULLY AUTOMATIC SPRINKLER SYSTEM ADJUSTED TO PROVIDE 100 % COVERAGE OF ALL LANDSCAPE AREAS. ALL HEADS SHALL BE OVERLAP AS PER MANUFACTURERS SPECIFICATIONS AND PERFORMANCE ADJUSTED TO 50 STANDARDS. EACH SYSTEM SHALL BE INSTALLED WITH A RAIN SENSOR.

OWNER SHALL APPROVE ALL MATERIAL AND FINISH SAMPLES ALONG WITH ALL EQUIPMENT SPECIFICATIONS PRIOR TO ORDERING AND INSTALLATION. PROVIDE THRERSHOLD AND WEATHERSTRIPPING AT ALL EXTERIOR DOORS.

GLASS BLOCK

MORTAR TO HAVE COMPRESSIVE STRENGTH: TYPE S - 1800 psi AT 20 DAYS EXPANSION STRIPS TO BE PLACED PER MFGR. SPECS.

GARAGE NOTES

PARTITIONS BETWEEN GARAGE AND LIVING AREAS WITH R-11 INSULATION. NO. 25 GAUGE " GYPSUM WALLBOARD APPLIED CHANNEL-SHAPED STUDS @ 16" O/C WITH ONE FULL LENGTH LAYER OF VERTICALLY, ATTACHED WITH 1" LONG NO. 6 DRYWALL SCREWS TO EACH SIDE. SCREWS ARE 8" O/C AROUND PERIMETER AND AT 12" O/C ON THE INTERMEDIATE STUD.

SANDRA PUERTA ARCHITECT

THE CONSTRUCTION AND ARCHITECTURE GROUP, INC.
SANDRA PUERTA FL Lic. #: AA26002780 • AR 95385
6476 Kirsten Way, Lake Worth, FL 33467
Phone | 561.248.5498 Fax | 561.561.828.2645

DATE:
Oct. 15, 20.

BLDG. DEPT. PLAN REVISIONS:
1
2
3
4
5
6
6

A Change of Use for:
Redeeming Lighthouse
7452 ROYAL PALM BLVD
MARGATE FL 33063
Parcel ID: 484126012190

General Notes and Specifications

MANAGED BY: FZ
DRAWN BY: AD/FZ
REVIEWED BY: SP

SHEET:
A-0

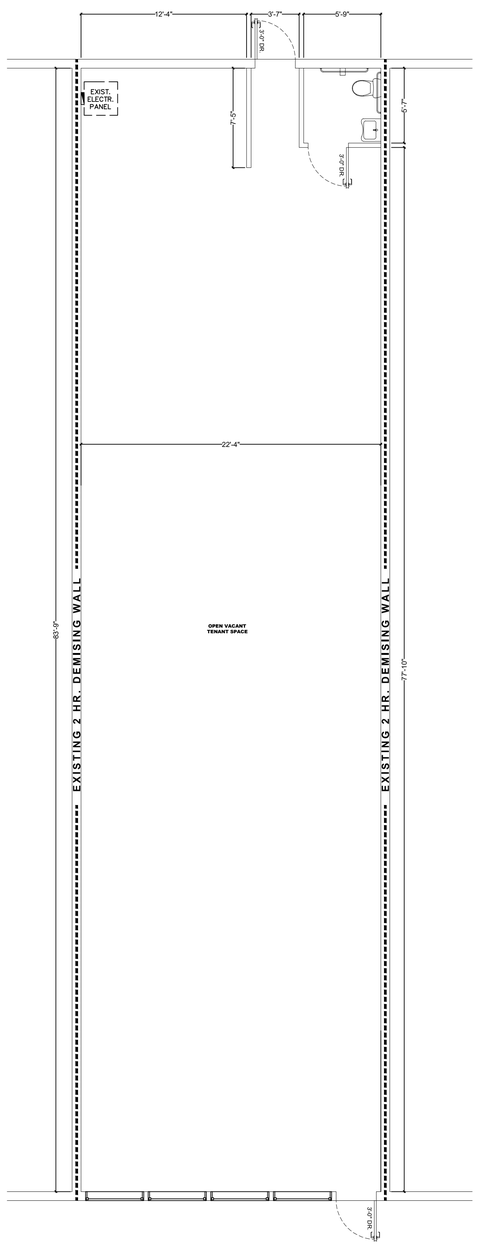

EXISTING FLOOR PLAN
SCALE: 3/16" = 1'-0"

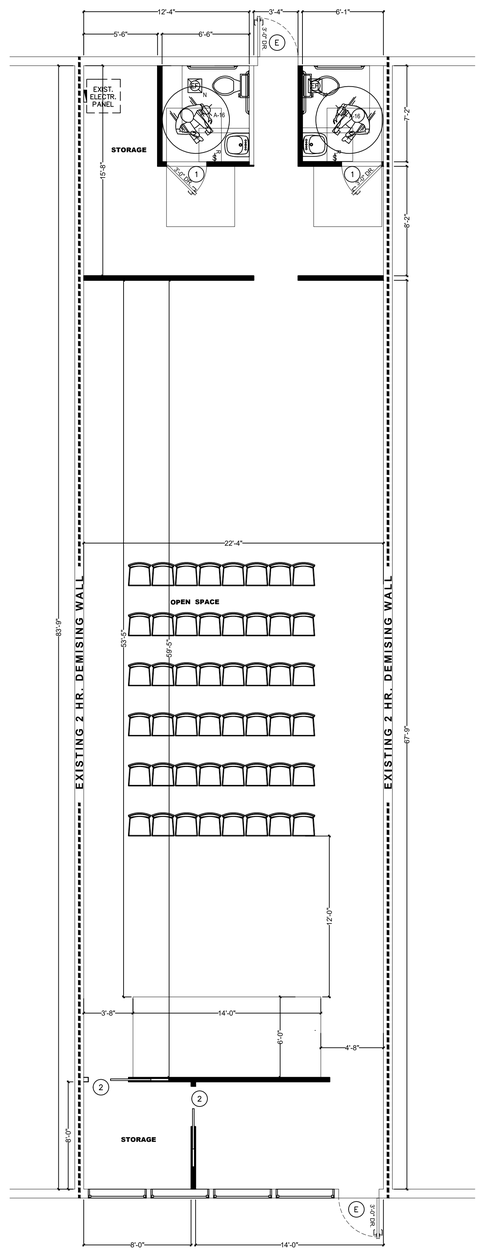

CONSTRUCTION PLAN
SCALE: 3/16" = 1'-0"

GENERAL CONSTRUCTION NOTES

1. ALL WORK BY ALL TRADES TO BE COMPLETED IN ACCORDANCE WITH ALL APPLICABLE, LOCAL, & GOVERNMENTAL CODES, ORDINANCES, STANDARDS AND RESTRICTIONS.

2. ALL TRADES TO COORDINATE THEIR WORK WITH ALL OTHER TRADES TO AVOID INTERFERENCE WITH THE PROGRESS OF CONSTRUCTION.

3. CONTRACTOR TO VERIFY ALL DIMENSIONS ON THE JOB PRIOR TO COMMENCING CONSTRUCTION AND NOTIFY ARCHITECT OF ALL DISCREPANCIES. DIMENSIONS ALWAYS TAKE PRECEDENCE OVER SCALED DRAWINGS.

4. ALL DIMENSIONS ARE NOMINAL TO THE FACE OF STUDS, CONC. BLK. OR EDGE OF MONOLITHIC SLAB FOOTING UNLESS NOTED OTHERWISE. DOOR AND WINDOW SIZE OPENINGS TO BE VERIFIED WITH THE MANUFACTURER.

5. IT IS NOT THE INTENT OF THESE PLANS TO SHOW EVERY MINOR DETAIL OF CONSTRUCTION. THE CONTRACTOR IS EXPECTED TO FURNISH & INSTALL ALL ITEMS FOR COMPLETE FULLY OPERATIVE SYSTEMS IN FIRST CLASS WORKMANLIKE MANNER.

6. INSULATE EXTERIOR MASONARY WALL WITH MIN. R-4.1 INSUL., EXTERIOR WD. FRAMED WALLS WITH R-19 INSUL. AND ATTIC SPACES WITH MIN. R-30 INSUL.

7. COMPACT ALL FILL TO A MIN. OF 95% DENSITY AND POISON SOIL FOR TERMITES: MIN. SOIL BRG.: 2500 P.S.F.

8. MIN. CONC. STRENGTH: 3000 P.S.I. @ 28 DAYS. MIN. CONCRETE COVERAGE FOR REINF. BARS; SLAB: 3/4"; BEAMS & COLS: 1 1/2"; TIE COLS: 3/4"; FORMED CONC. BELOW GRADE: 2" & UNFORMED CONC.: 3".

9. REINFORCING STEEL TO BE GRADE 60.

10. DETAILS OF CONCRETE REINF. SHALL BE IN ACCORDANCE WITH "THE MANUAL OF STD. PRACTICE FOR REINFORCED CONCRETE CONSTRUTION". TRAP.

11. TIE COLUMNS TO HAVE DOWELS INTO CONCRETE FTG. WITH THE SAME SIZE AND NUMBER OF DOWELS AS VERTICAL REINF. BARS,; REINF. STL. TO BE LAPPED 30 BAR DIAM. MIN. @ SPLICES.

12. PROVIDE CLEANOUT OPENINGS AT THE BOTTOM OF GROUTED CELLS OF CONCRETE BLK. TIE COLUMNS.

13. ALL WOOD IN CONTACT WITH CONC., MASONRY OR STL. SHALL BE PRESS. TRTD. WD. STRUCTURAL LUMBER TO BE A STRESS GRADE OF MIN. F = 1200 PSI (BENDING).

14. MIN. ELECTRICAL WIRE SIZE SHALL BE #14 A.W.G. (EXCLUDING THE CONTROL WIRING). ALL CONDUCTORS SHALL BE "COPPER" WITH "THHN" INSULATION.

15. ALL RACEWAYS UNDERGROUND OR LARGER THAN 2" IN DIAM. SHALL BE GALVANIZED RIGID STL. CONDUIT OR SCHED. 40 PVC.; OTHER RACEWAYS AS PER CODE REQRMTS.

16. PROVIDE "GFI" RECEPTACLES IN BATHROOMS, AT KITCHEN COUNTERS, IN GARAGE AND OUTSIDE LOCATIONS.

17. SANITARY PLBG. PIPING TO HAVE MIN. 1/8" PER FT. PITCH AT ALL HORIZ. RUNS. PROVIDE CLEANOUTS AT THE BASE OF WASTE STACKS.

18. ALL UNDERGRD. WATER PIPING SHALL BE COPPER TYPE "K; ALL OTHER WATER PIPING SHALL BE COPPER TYPE "L".

19. PROVIDE AIR CHAMBERS AND SHUT OFF VALVES FOR ALL WATER SUPPLY PIPING AT FIXTURES; PROVIDE VACUUM BREAKER AND SHUTOFF VALVE ON ALL HOSE BIBBS.

20. A/C AIR HANDLING UNITS TO HAVE CONDENSATE SAFE WASTE WITH TRAP.

• WALL PLAN LEGEND •

WALL TYPE	WALL DESCRIPTION
EXISTING EXTERIOR WALL	EXISTING - NO CHANGE
EXISTING INTERIOR WALL	EXISTING - NO CHANGE
IN FILL EXTERIOR WALL	IN FILL OPENING
NEW INTERIOR WALL	NEW WALLS AS PER DETAIL
NEW EXTERIOR CBS WALLS	NEW WALLS AS PER DETAIL
NEW EXTERIOR FRAME WALLS	NEW WOOD FRAMED WALLS AS PER DETAIL

SCOPE OF WORK

1. CHANGE OF USE FROM GENERAL COMMERCIAL TO ASSEMBLY(A-3).
2. PROPOSED WALLS AS PER PLANS.
3. ELECTRICAL WORK AS PER PLANS.
4. SEE PLANS FOR MORE INFORMATION.

NO MECHANICAL WORK .
ALL EXISTING TO REMAIN.

NO ADDITIONAL SQ.FT. INTERIOR WORK ONLY

PAINTING EXIST.CEILING TILES IF NECESSARY

REMOVE & REPLACE CEILING TILES IF NECESSARY

NOTE:
CONTRACTOR TO VERIFY IN FIELD IF PANIC HARDWARE HAS BEEN PROVIDED ON ALL EGRESS DOORS AS PER 2017 FBC SECTION 1008.1.10.

NOTE:
ALL SINK AND DOOR HARDWARE TO BE LEVER TYPE.

NOTE:
ALL FINISHES TO BE SPECIFIED BY OWNER. ALL WALLS TO BE F.R.P. AND FLOOR TO BE TILE. OWNER TO SPECIFY COLOR AND MANUFACTURER. INSTALL ALL FINISHES ACCORDING TO FBC 2017.

NOTE:
NUMERICAL ADDRESS TO BE PROVIDED ON ALL EXTERIOR DOORS

NOTE:
BUILDING IS REQUIRED TO BE PROVIDED WITH ADDRESS NUMBERS OR LETTERS PLAINLY VISIBLE FROM THE STREET PER 2017 FBC SECTION 501.2.

CONTRACTOR TO VERIFY ANY CONDITION AND NOTIFY ALL RESPONSIBLE PARTIES IF THERE ARE ANY DISCREPANCIES. THE ARCHITECT ASSUMES NO RESPONSIBILITY.

ALL WORK TO BE PERFORMED IN ACCORDANCE WITH THE F.B.C 5TH EDITION (2017) EDITION, THE N.E.C., FLORIDA, FIRE PREVENTION CODE, 5TH EDITION WITH LATEST SUPPLEMENTS, THE ZONING ORDINANCES IN THE CITY OF JURISDICTION AND ALL APPLICABLE CODES AND STANDARDS.

DOOR SCHEDULE

MARK	SIZE (R.O.) W	H	TH	MATERIAL: WOOD	WD/GLASS	METAL	FBRGLASS	ALUM/GLASS	QTY: SINGLE	DOUBLE	OPERATION: HINGED	SLIDING	BI-FOLD	POCKET	OTHER	FRAME: WOOD	METAL	ALUMINUM	EXTG	IRON	THRESHOLD	HW SET	NOTES
1	3'-0"	6'-8"	1 3/4"	●					●		●					●							
2	3'-0"	6'-8"	1 3/4"	●					●					●		●							
E	EXISTING TO REMAIN																						

WINDOW SCHEDULE

MARK	SIZE (R.O.) W	H	TYPE	MATERIAL: WOOD	ALUM.	WD/CLAD	OPERATION: VENTED: CUSTOM	H. ROLL	S. HUNG	FIXED	NOTES	REMARKS
E	EXISTING TO REMAIN											

NOTE:
ALL WINDOWS AND DOORS TO BE NEW, UNLESS NOTED WITH "E" FOR EXISTING TO REMAIN

NOTE:
EXIST. MECHANICAL SYSTEM AND EXIST. LIGHTINGS TO REMAIN

SANDRA PUERTA ARCHITECT
THE CONSTRUCTION AND ARCHITECTURE GROUP, INC.
SANDRA PUERTA FL Lic. #: AA26002780 • AR 95385
6476 Kirsten Way, Lake Worth, FL 33467
Phone | 561.248.5498 Fax | 561.828.2645

DATE: Oct. 15, 20.

BLDG. DEPT. PLAN REVISIONS:
1
2
3
4
5
6
6

A Change of Use for:
Redeeming Lighthouse
7452 ROYAL PALM BLVD
MARGATE FL 33063
Parcel ID: 484126012190

Proposed Floor Plan

MANAGED BY: FZ
DRAWN BY: AD/FZ
REVIEWED BY: SP

SHEET: A-1

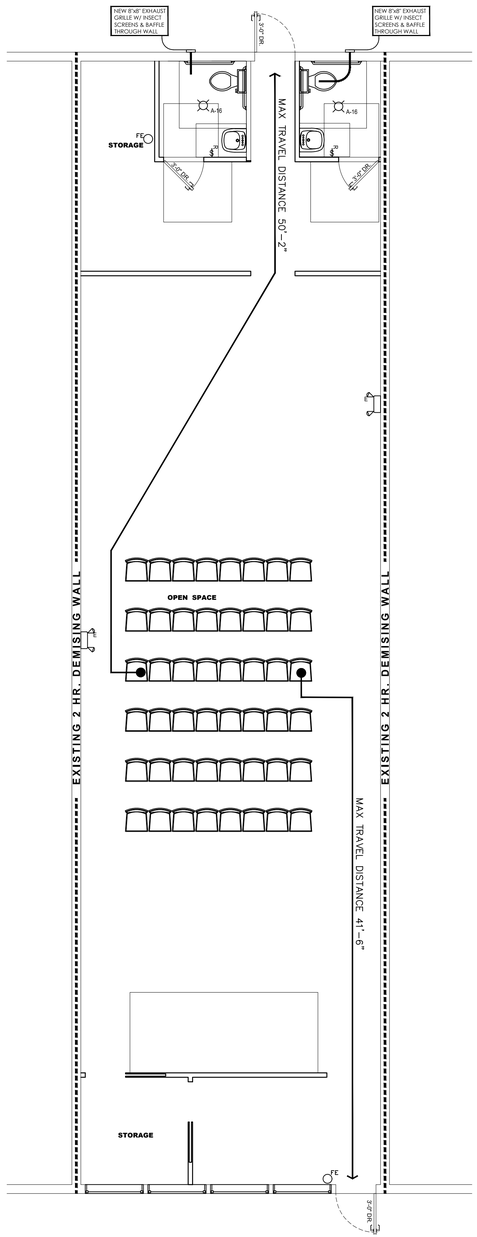

EGRESS PLAN

SCALE: 3/16" = 1'-0"

EGRESS | LIFE SAFETY GENERAL NOTES

1. THE CONTRACTOR SHALL PROVIDE AND INSTALL (1) 10 LBS. ABC TYPE U.L. LISTED FIRE EXTINGUISHER PER 2500 S.F. LOCATION SHALL BE APPROVED BY FIRE MARSHALL PRIOR TO INSTALLATION.

2. EQUIPMENT AND CONNECTIONS TO THE BUILDING FIRE ALARM CONTROL PANEL SHALL BE PROVIDED. THE CONTRACTOR SHALL VERIFY THE BUILDING SYSTEM PRIOR TO BIDDING AND INCLUDE ALL REQUIRED ELEMENTS IN THE BID.

ASSEMBLY OCCUPANCIES

EGRESS REQUIREMENTS SHALL COMPLY WITH NFPA 101, CHAPTER 7 SECTION 7.2, MEANS OF EGRESS COMPONENTS AND SECTION 12.2, MEANS OF EGRESS REQUIREMENTS FOR ASSEMBLY OCCUPANCIES, ALL HARDWARE SHALL COMPLY WITH SECTION 7.2.1.5.LOCKS, LATCHES, AND ALARM DEVICES FOR LOCKING REQUIREMENTS

EXIT REQUIREMENTS

MORE THAN 50 PERSONS: TWO EXITS REQUIRED AND DOOR MUST SWING WITH PATH OF EGRESS.

EXIT ACCESS TRAVEL DISTANCE PER TABLE 1016.1 FOR ASSEMBLY OCCUPANCY: 250'-0" W/ APPROVED FIRE SPRINKLER SYSTEM.

1 EXITS REQUIRED, 2 EXITS PROVIDED
PER TABLE 1005.1 FOR 151 OCCUPANTS.

ONLY ONE EXIT IS REQUIRED FOR OCCUPANTS UNDER 49

NOTE:
CONTRACTOR TO VERIFY EXISTING CONDITIONS OF SPACE TO MEET FIRE-RESISTANCE RATING REQUIREMENTS AS PER FBC TABLE 706.3.7.

CLASSIFICATION OF HAZARD:

ORDINARY HAZARD AS PER 2012 NFPA 101 38.1.5.

TYPE OF CONSTRUCTION:
TYPE IIIB - NOT PROTECTED (UNSPRINKLERED).

FLAME SPrEAD GROUP:

☒ 1. Class A Interior Finish. Flamespread 0–25, Smoke Developed 0–450. Any element thereof when do tested shell not continue to propagate fire.

☐ 2. Class B Interior Finish. Flamespread 26–75, Smoke Developed 0–450.

☐ 3. Class C Interior Finish. Flamespread 76–200, Smoke Developed 0–450.

MINIMUM INTERIOR FINISH CLASSIFICATION:

OCCUPANY	UNSPRINKLERED			SPRINKLERED		
	Exit[1]	Exit Access	Other Spaces	Exit[1]	Exit Access	Other Spaces
A	A	A	B	B	C	C
B	B	B	C	C	C	C
E	A	B	B	B	C	C
F	C	C	C	B	C	C
H	Sprinkler required			B	C	C
IRestrined	A	A	C	A	A	C
IUnrestrined	Sprinkler required			B	B	B
M	B	B	C	C	C	C
R[2,4]	B	B	C	C	C	C
S	C	C	C	C	C	C

EGRESS | LIFE SAFETY LEGEND

SYMBOL		DESCRIPTION
	EGRESS PATH	DENOTES PATH OF EGRESS AND TRAVEL DISTANCE.
FE	FIRE EXTINGUISHER	FIRE EXTINGUISHER 2A10BC 10 LBS
"K" FE	FIRE EXTINGUISHER	FIRE EXTINGUISHER NEW "K" TYPE
#	KEY NOTE	SEE EGRESS | LIFE SAFETY NOTES
	EMERGENCY LIGHTS / EXIT SIGN	SEE EGRESS | LIFE SAFETY NOTES

SANDRA PUERTA ARCHITECT

THE CONSTRUCTION AND ARCHITECTURE GROUP, INC.
SANDRA PUERTA FL Lic. #: AA26002780 • AR 95385
6476 Kirsten Way, Lake Worth, FL 33467
Phone | 561.248.5498 Fax | 561.828.2645

DATE:
Oct. 15, 20.

BLDG. DEPT. PLAN REVISIONS:

1
2
3
4
5
6
6

A Change of Use for:
Redeeming Lighthouse
7452 ROYAL PALM BLVD
MARGATE FL 33063
Parcel ID: 484126012190

Egress Floor Plan and Notes

MANAGED BY: FZ
DRAWN BY: AD/FZ
REVIEWED BY: SP

SHEET:
A-2

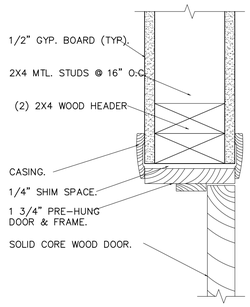

1 A-3 **TYP. INT. DOOR HEAD DETAIL**
SCALE: NOT TO SCALE

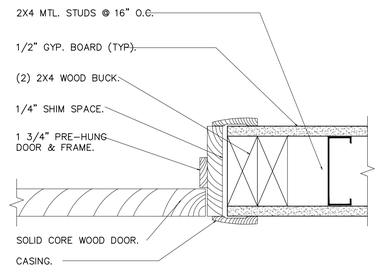

2 A-3 **TYP. INT. DOOR JAMB DETAIL**
SCALE: NOT TO SCALE

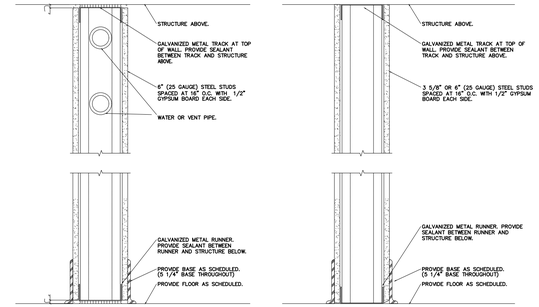

3 A-3 **TYP. INTERIOR WALL PARTITIONS**
SCALE: NOT TO SCALE

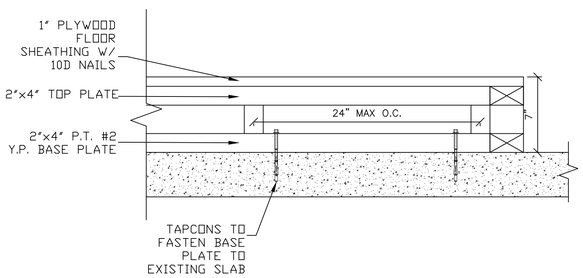

5 A-3 **PODIUM DETAIL**
SCALE: NOT TO SCALE

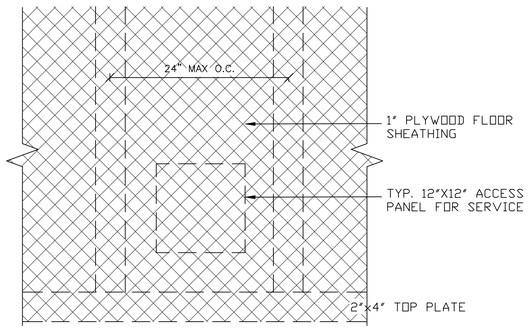

6 A-3 **PODIUM DETAIL**
SCALE: NOT TO SCALE

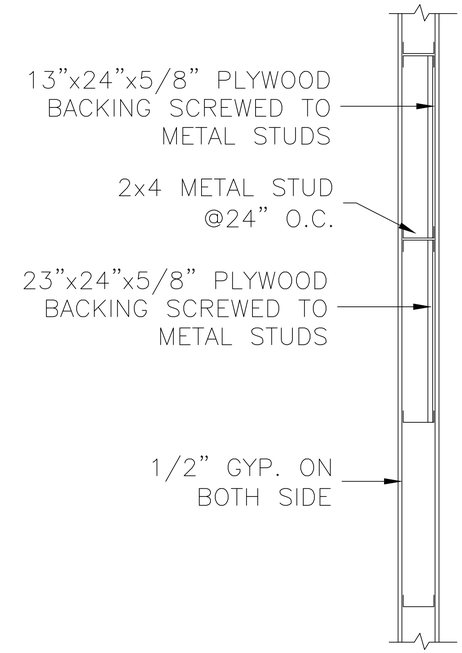

8 A-3 **TYP. WALL BACKING DETAIL**
SCALE: NOT TO SCALE

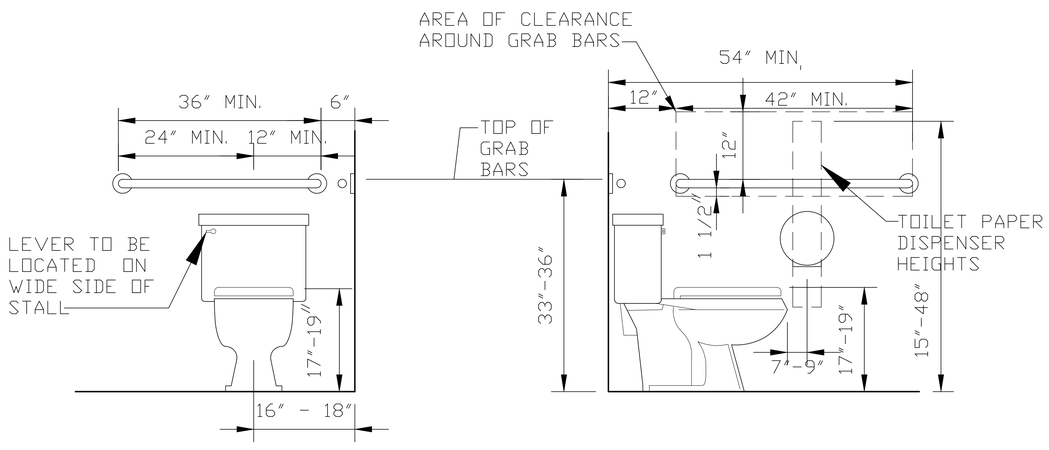

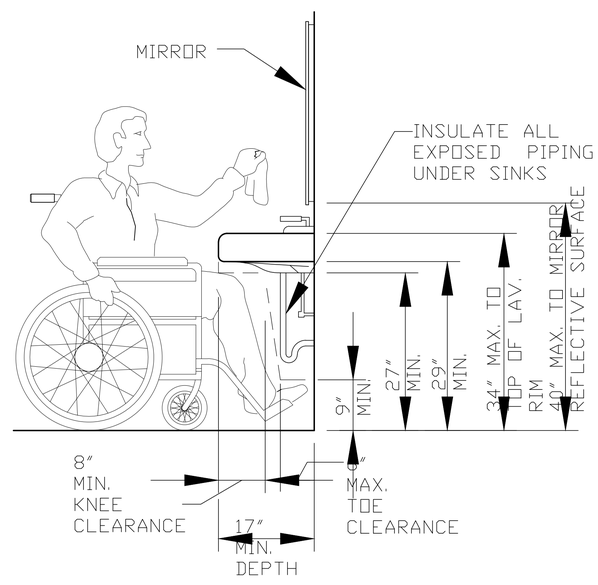

7 A-3 **ADA DETAILS AND NOTES**
SCALE: NOT TO SCALE

SANDRA PUERTA ARCHITECT

THE CONSTRUCTION AND ARCHITECTURE GROUP, INC.
SANDRA PUERTA FL Lic. #: AA26002780 • AR 95385
6476 Kirsten Way, Lake Worth, FL 33467
Phone | 561.248.5498 Fax | 561.828.2645

DATE: Oct. 15, 20.

BLDG. DEPT. PLAN REVISIONS:
1
2
3
4
5
6
6

A Change of Use for:
Redeeming Lighthouse
7452 ROYAL PALM BLVD
MARGATE FL 33063
Parcel ID: 484126012190

Construction Details

MANAGED BY: FZ
DRAWN BY: AD/FZ
REVIEWED BY: SP

SHEET: A-3

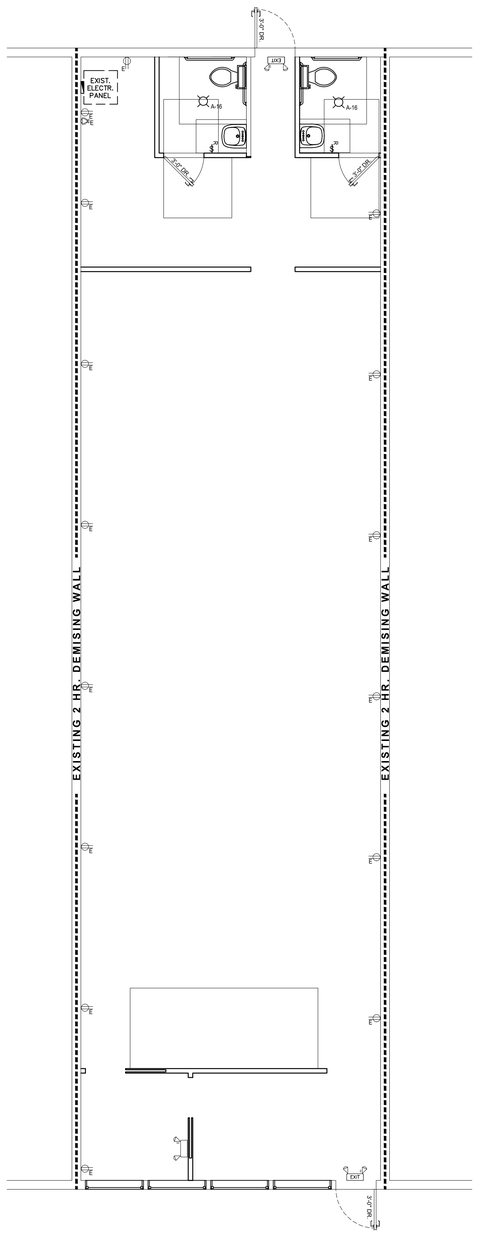

ELECTRICAL PLAN
SCALE: 1/4" = 1'-0"

ELECTRICAL SYMBOLS LEGEND

- SINGLE RECEPTACLE
- DUPLEX RECEPTACLE
- 220V RECEPTACLE
- SWITCHED RECEPTACLE
- QUADRAPLEX RECEPTACLE
- SINGLE FLOOR RECEPTACLE
- DUPLEX FLOOR RECEPTACLE
- SWITCHED FLOOR RECEPTACLE
- QUADRAPLEX FLOOR RECEPTACLE
- GFI GROUND FAULT INTERRUPTER
- WP GFI WEATHERPROOF GROUND FAULT INTERRUPTER
- EP ELECTRIC PANEL
- VP VAPOR PROOF
- 24x48 FLUOR. FIXTURE
- 12x48 FLUOR. FIXTURE
- EXHAUST FAN w/LIGHT
- EXHAUST FAN
- CEILING FAN
- CEILING FAN w/LIGHT
- E.M. ELECTRIC CO. METER
- G.M. GAS CO. METER
- B BELL
- SD SMOKE DETECTOR
- CM CARBON MONOXIDE DETECTOR
- SINGLE FLOOD - WALL MOUNTED
- DOUBLE FLOOD - WALL MOUNTED
- SINGLE FLOOD - SOFFIT MOUNTED
- DOUBLE FLOOD - SOFFIT MOUNTED
- INCANDESCENT FIXTURE - CEILING MOUNTED
- INCANDESCENT FIXTURE - WALL MOUNTED
- RECESSED HIGH HAT
- RECESS INCAND. (EYEBALL) FIXTURE
- 24 2 FT UNDER CABINET FLUOR. FIXTURE
- 36 3 FT UNDER CABINET FLUOR. FIXTURE
- 48 4 FT UNDER CABINET FLUOR. FIXTURE
- STRIP LIGHT
- $ SINGLE POLE SWITCH
- $3 3 WAY SWITCH
- $4 4 WAY SWITCH
- $D DIMMER SWITCH
- PUSHBUTTON
- DISCONNECT SWITCH
- J JUNCTION BOX
- TV TV JACK
- PHONE JACK - PREWIRE ONLY
- DATA COMPUTER OUTLET (W/ GENERAL USE DUPLEX RECEPTICLE)
- PHOTOCELL - SOFFIT MOUNT
- PHOTOCELL - WALL MOUNT
- ELECTRICAL PANEL
- CO CARBON MONOXIDE DETECTOR

ELECTRICAL FIXTURES LEGEND

FIXTURE NOTE	DESCRIPTION
E	EXISTING - NO CHANGE
N	INSTALL NEW
R	RELOCATE

ELECTRICAL NOTES

1. ALL ELECTRICAL WORK SHALL COMPLY WITH THE 2017 FLORIDA BUILDING CODE, THE NATIONAL ELECTRICAL CODE AND ALL LOCAL CODES.

2. THE ELECTRICAL SUBCONTRACTOR SHALL BE RESPONSIBLE FOR FULL COORDINATION OF THIS WORK WITH THAT OF THE GENERAL CONTRACTOR AND THE OTHER SUB-CONTRACTORS.

3. PROVIDE A GUARANTEE AGAINST DEFECTIVE WORKMANSHIP, MATERIALS AND EQUIPMENT FOR A PERIOD OF ONE YEAR FROM THE DATE OF FINAL ACCEPTANCE BY OWNER.

4. ALL POWER AND CONTROL WIRING SHALL BE BY THE ELECTRICAL SUB-CONTRACTOR.

5. ELECTRICAL SUBCONTRACTOR SHALL BE RESPONSIBLE FOR ALL APPLICABLE FEES TAXES AND PERMITS. WIRING DEVICES SHALL BE U.L. LISTED COMMERCIAL GRADE.

6. ALL CONDUITS SHALL BE MC CABLE EXCEPT AS FOLLOWS:
   A: EMT MAY BE USED INDOORS, WHERE NOT SUBJECT TO ABUSE.
   B: PVC MAY BE USED UNDERGROUND WHERE ALLOWED BY CODE.

7. THESE PLANS ARE BASED ON AVAILABLE INFORMATION. NOTIFY ARCHITECT/ OWNER OF ANY CONDITIONS WHICH AFFECT PROGRESS OF CONSTRUCTION.

8. VERIFY ELECTRICAL REQUIREMENTS OF EACH PIECE OF EQUIPMENT PRIOR TO ACTUAL CONNECTION THERE-TO.

9. ESTABLISH FIELD LIAISON WITH PROJECT MANAGER PRIOR TO STARTING WORK. VERIFY ALL EXISTING CONDITIONS AND NOTIFY ARCHITECT / OWNER OF ANY DISCREPANCIES.

10. ELECTRICAL SUBCONTRACTOR SHALL VERIFY LOCATIONS AND CONNECTIONS TO ALL ELECTRICAL EQUIPMENT FURNISHED BY OTHERS, PRIOR TO INSTALLING OUTLETS, CONDUIT STUBS , DROPS , ETC. VERIFY LOCATIONS OF ALL CONTROLS FURNISHED BY OTHERS. INSTALL CONTROLS AND MAKE CONNECTIONS THERETO.

11. ALL SLEEPING ROOM BRANCH CIRCUITS SHALL BE ARC FAULT RECEPTACLE. ALL BATH OUTLETS , KITCHEN AND WITHIN 2' OF ANY SOURCE OF WATER TO BE GFI.

12. TAMPER RESISTANT RECEPTACLE REQUIRED AS PER NEC 406.11 FOR ALL NEW OUTLETS

13. COMBINATION TYPE BREAKERS ARE REQUIRED FOR ALL SMOKE DETECTORS. PER NEC 210.12B 16.

14. ALL PHONE / INTERNET LOCATIONS TO HAVE (2)CAT6 CABLES. ALL T.V. LOCATIONS TO HAVE (2) CAT6 AND (2)RG6 COAXIAL CABLES.

15. ALL T.V. LOCATIONS TO HAVE (2) CAT6 AND (2)RG6 COAXIAL CABLES.

EXISTING PANEL A
A. I. C. = 10,000

TYPE LOAD CENTER
SERVICE 1Ø
VOLTAGE 120/240
MOUNTING MOUNT
POLES 30

MAIN BUS 250A
NEUTRAL FULL
MAINS M.C.B.
LOCATION
UTILITY (SEE PLAN)

NO. DEM. V.A.	POLE TRIP	COND.	WIRE	DESCRIPTION	CKT	CKT	DESCRIPTION	WIRE	COND.	POLE TRIP	NO. DEM. V.A.
2000	40/2	3/4"	#8	WATER HEATER	1	2	GREAT ROOM	#12	1/2"	20/1	1500
					3	4	GENERAL LIGHTING	#12	1/2"	20/1	1500
10,000	60/2	3/4"	#6	A.H.U.-1	5	6	GENERAL LIGHTING	#12	1/2"	20/1	1500
					7	8	GENERAL LIGHTING	#12	1/2"	20/1	1500
5,000	40/2	3/4"	#6	A.C.C.U.-1	9	10	GENERAL RECEPT.	#12	1/2"	20/1	1500
					11	12	GENERAL RECEPT.	#12	1/2"	20/1	1500
850	15/1	1/2"	#12	SMOKE ALARMS AFCI	13	14	GENERAL RECEPT.	#12	1/2"	20/1	1500
10,000	60/2	3/4"	#6	A.H.U.-2	15	16	BATH GFI	#12	1/2"	20/1	1500
					17	18	BATHROOM LIGHTS	#12	1/2"	20/1	1500
5,000	40/2	3/4"	#6	A.C.C.U.-2	19	20	SPARE				
					21	22					
					23	24					
					25	26					
					27	28					
					29	30					
32,850											13,500

✱ 120V BATTERY BACK-UP ON KITCHEN OR BATHROOM LIGHTING CIRCUIT
✱✱ #10 GROUND
✱✱✱ NON CONCURRENT LOAD
✱✱✱✱ BRACED OUTLET

PANEL 'A' TOTAL LOAD = 46,360 VA

FIRST 10,000 @ 100%	=	10,000 VA
BALANCE @ 40%	=	7,340 VA
A/C-HEAT @ 60% (31,000 x 0.6≊)	=	18,000 VA
TOTAL LOAD USE	=	36,340 VA

$$\frac{35.34 \text{ KW} \times 1000}{240 \text{ AMPS}} = 148 \text{ AMPS}$$

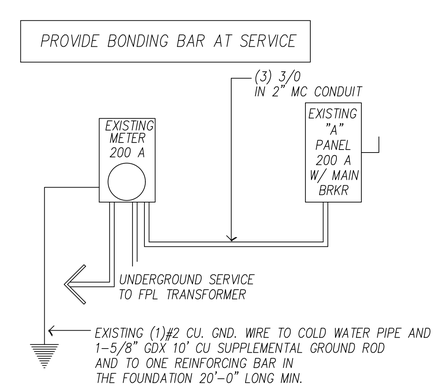

ELECTRICAL RISER DIAGRAM
SCALE: NOT TO SCALE

SANDRA PUERTA ARCHITECT
THE CONSTRUCTION AND ARCHITECTURE GROUP, INC.
SANDRA PUERTA FL Lic. #: AA26002780 • AR 95385
6476 Kirsten Way, Lake Worth, FL 33467
Phone | 561.248.5498 Fax | 561.828.2645

DATE: Oct. 15, 20.

BLDG. DEPT. PLAN REVISIONS:
1
2
3
4
5
6
7

A Change of Use for:
Redeeming Lighthouse
7452 ROYAL PALM BLVD
MARGATE FL 33063
Parcel ID: 484126012190

Electrical Plan

MANAGED BY: FZ
DRAWN BY: AD/FZ
REVIEWED BY: SP

SHEET: E-1

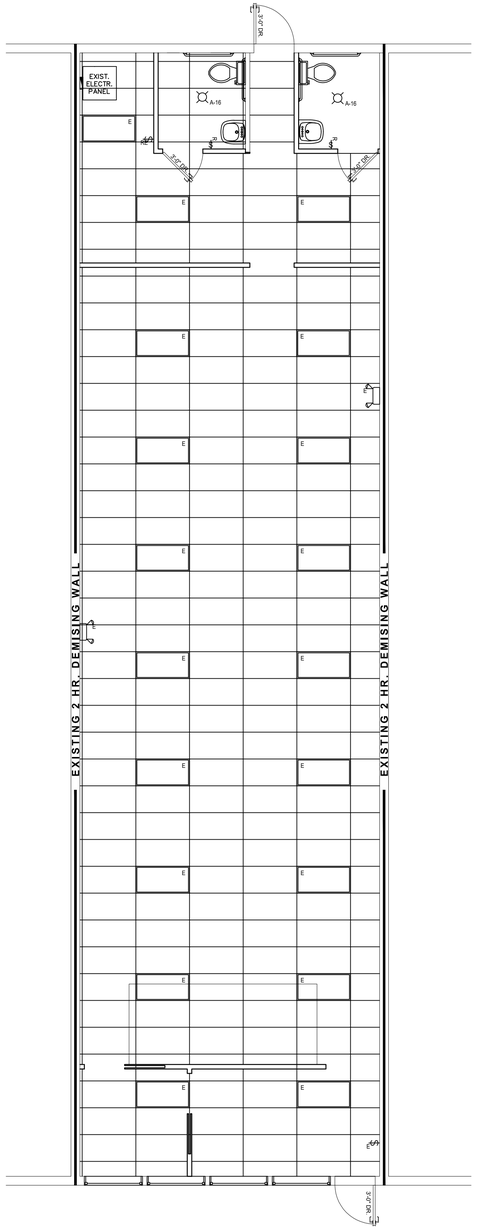

REFLECTED CEILING/ LIGHTING PLAN

SCALE: 1/4" = 1'-0"

1

ELECTRICAL NOTES

1. ALL ELECTRICAL WORK SHALL COMPLY WITH THE 2017 FLORIDA BUILDING CODE, THE NATIONAL ELECTRICAL CODE AND ALL LOCAL CODES.

2. THE ELECTRICAL SUBCONTRACTOR SHALL BE RESPONSIBLE FOR FULL COORDINATION OF THIS WORK WITH THAT OF THE GENERAL CONTRACTOR AND THE OTHER SUB-CONTRACTORS.

3. PROVIDE A GUARANTEE AGAINST DEFECTIVE WORKMANSHIP, MATERIALS AND EQUIPMENT FOR A PERIOD OF ONE YEAR FROM THE DATE OF FINAL ACCEPTANCE BY OWNER.

4. ALL POWER AND CONTROL WIRING SHALL BE BY THE ELECTRICAL SUB-CONTRACTOR.

5. ELECTRICAL SUBCONTRACTOR SHALL BE RESPONSIBLE FOR ALL APPLICABLE FEES TAXES AND PERMITS. WIRING DEVICES SHALL BE U.L. LISTED COMMERCIAL GRADE.

6. ALL CONDUITS SHALL BE MC CABLE EXCEPT AS FOLLOWS:
   A: EMT MAY BE USED INDOORS, WHERE NOT SUBJECT TO ABUSE.
   B: PVC MAY BE USED UNDERGROUND WHERE ALLOWED BY CODE.

7. THESE PLANS ARE BASED ON AVAILABLE INFORMATION. NOTIFY ARCHITECT/ OWNER OF ANY CONDITIONS WHICH AFFECT PROGRESS OF CONSTRUCTION.

8. VERIFY ELECTRICAL REQUIREMENTS OF EACH PIECE OF EQUIPMENT PRIOR TO ACTUAL CONNECTION THERE-TO.

9. ESTABLISH FIELD LIAISON WITH PROJECT MANAGER PRIOR TO STARTING WORK. VERIFY ALL EXISTING CONDITIONS AND NOTIFY ARCHITECT / OWNER OF ANY DISCREPANCIES.

10. ELECTRICAL SUBCONTRACTOR SHALL VERIFY LOCATIONS AND CONNECTIONS TO ALL ELECTRICAL EQUIPMENT FURNISHED BY OTHERS, PRIOR TO INSTALLING OUTLETS, CONDUIT STUBS , DROPS , ETC. VERIFY LOCATIONS OF ALL CONTROLS FURNISHED BY OTHERS. INSTALL CONTROLS AND MAKE CONNECTIONS THERETO.

11. ALL SLEEPING ROOM BRANCH CIRCUITS SHALL BE ARC FAULT RECEPTACLE. ALL BATH OUTLETS , KITCHEN AND WITHIN 2' OF ANY SOURCE OF WATER TO BE GFI.

12. TAMPER RESISTANT RECEPTACLE REQUIRED AS PER NEC 406.11 FOR ALL NEW OUTLETS

13. COMBINATION TYPE BREAKERS ARE REQUIRED FOR ALL SMOKE DETECTORS. PER NEC 210.12B 16.

14. ALL PHONE / INTERNET LOCATIONS TO HAVE (2)CAT6 CABLES. ALL T.V. LOCATIONS TO HAVE (2) CAT6 AND (2)RG6 COAXIAL CABLES.

15. ALL T.V. LOCATIONS TO HAVE (2) CAT6 AND (2)RG6 COAXIAL CABLES.

ELECTRICAL FIXTURES LEGEND

FIXTURE NOTE	DESCRIPTION
E	EXISTING - NO CHANGE
N	INSTALL NEW
R	RELOCATE

EGRESS | LIFE SAFETY LEGEND

SYMBOL		DESCRIPTION
	EGRESS PATH	DENOTES PATH OF EGRESS AND TRAVEL DISTANCE.
FE	FIRE EXTINGUISHER	FIRE EXTINGUISHER 2A10BC 10 LBS
"K" FE	FIRE EXTINGUISHER	FIRE EXTINGUISHER NEW "K" TYPE
#	KEY NOTE	SEE EGRESS | LIFE SAFETY NOTES
	EMERGENCY LIGHTS / EXIT SIGN	SEE EGRESS | LIFE SAFETY NOTES

ELECTRICAL SYMBOLS LEGEND

- SINGLE RECEPTACLE
- DUPLEX RECEPTACLE
- 220V RECEPTACLE
- SWITCHED RECEPTACLE
- QUADRAPLEX RECEPTACLE
- SINGLE FLOOR RECEPTACLE
- DUPLEX FLOOR RECEPTACLE
- SWITCHED FLOOR RECEPTACLE
- QUADRAPLEX FLOOR RECEPTACLE
- GFI GROUND FAULT INTERRUPTER
- WP GFI WEATHERPROOF GROUND FAULT INTERRUPTER
- EP ELECTRIC PANEL
- VP VAPOR PROOF
- 24x48 FLUOR. FIXTURE
- 12x48 FLUOR. FIXTURE
- EXHAUST FAN w/LIGHT
- EXHAUST FAN
- CEILING FAN
- CEILING FAN w/LIGHT
- E.M. ELECTRIC CO. METER
- G.M. GAS CO. METER
- B BELL
- SD SMOKE DETECTOR
- CM CARBON MONOXIDE DETECTOR
- SINGLE FLOOD - WALL MOUNTED
- DOUBLE FLOOD - WALL MOUNTED
- SINGLE FLOOD - SOFFIT MOUNTED
- DOUBLE FLOOD - SOFFIT MOUNTED
- INCANDESCENT FIXTURE - CEILING MOUNTED
- INCANDESCENT FIXTURE - WALL MOUNTED
- RECESSED HIGH HAT
- RECESS INCAND. (EYEBALL) FIXTURE
- 24 2 FT UNDER CABINET FLUOR. FIXTURE
- 36 3 FT UNDER CABINET FLUOR. FIXTURE
- 48 4 FT UNDER CABINET FLUOR. FIXTURE
- STRIP LIGHT
- $ SINGLE POLE SWITCH
- $3 3 WAY SWITCH
- $4 4 WAY SWITCH
- $D DIMMER SWITCH
- PUSHBUTTON
- DISCONNECT SWITCH
- J JUNCTION BOX
- TV TV JACK
- PHONE JACK - PREWIRE ONLY
- DATA COMPUTER OUTLET (W/ GENERAL USE DUPLEX RECEPTICLE)
- PHOTOCELL - SOFFIT MOUNT
- PHOTOCELL - WALL MOUNT
- ELECTRICAL PANEL
- CS CARBON MONOXIDE DETECTOR

1 E-1 **ELECTRICAL LEGEND**
SCALE: N.T.S.

SANDRA PUERTA ARCHITECT
THE CONSTRUCTION AND ARCHITECTURE GROUP, INC.
SANDRA PUERTA FL Lic. #: AA26002780 *AR 95385
6476 Kirsten Way, Lake Worth, FL 33467
Phone | 561.246.5498 Fax | 561.828.2645

DATE: Oct. 15, 20.

BLDG. DEPT. PLAN REVISIONS:
1
2
3
4
5
6
6

A Change of Use for:
Redeeming Lighthouse
7452 ROYAL PALM BLVD
MARGATE FL 33063
Parcel ID: 484126012190

Reflected Ceiling Plan

MANAGED BY: FZ
DRAWN BY: AD/FZ
REVIEWED BY: SP

SHEET: E-2

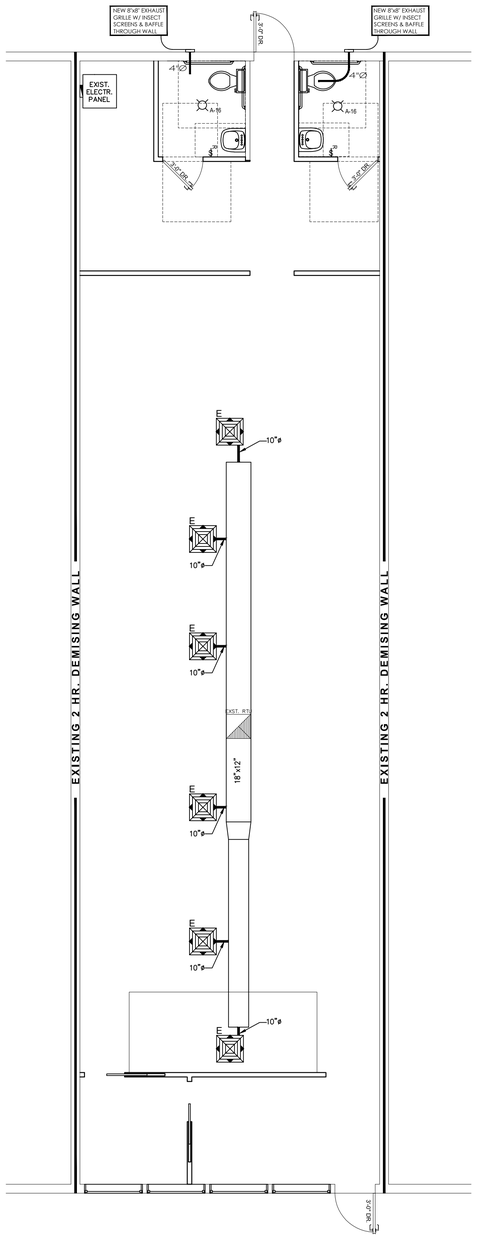

MECHANICAL PLAN
SCALE: 3/16" = 1'-0"

1

AIR CONDITIONING NOTES

1. HVAC SUBCONTRACTOR SHALL PROVIDE ALL LABOR, MATERIALS, TOOLS AND EQUIPMENT TO INSTALL A COMPLETE AND OPERATING A/C SYSTEM.
2. HVAC SUBCONTRACTOR TO PROVIDE ALL REQUIRED HVAC PERMITS.
3. HVAC SUBCONTRACTOR SHALL PROVIDE EQUIPMENT AS SCHEDULED ON PLANS.
4. INSTALLATION SHALL BE IN ACCORDANCE WITH 2014 FLORIDA BUILDING CODE – MECHANICAL.
5. DUCTBOARD DUCTWORK SHALL BE FABRICATED FROM 1.5" JOHNS–MANVILLE J–M MICROAIRE SD/MF FIBERGLASS DUCTBOARD AND INSTALLED PER MANUFACTURER'S AND SMACNA RECOMMENDATIONS. FLEXIBLE DUCT SHALL BE THERMAFLEX M–KE OR EQUAL. DUCT SHALL BE U.L. LISTED.
6. ALL AIR DEVICES SHALL BE OF ALUMINUM CONSTRUCTION. TITUS , METALAIRE OR AS APPROVED BY ARCHITECT.
7. ALL VENTILATION DUCTWORK SHALL BE GALVANIZED SHEET METAL.
8. HVAC SUBCONTRACTOR SHALL TEST AND BALANCE THE AIR QUANTITIES TO THOSE INDICATED ON PLANS. PROVIDE A T&B REPORT IN ACCORDANCE WITH AIR BALANCE COUNCIL STANDARDS.
9. HVAC SUBCONTRACTOR SHALL PROVIDE ALL CONTRACTORS, RELAYS AND THERMOSTATS. ELECTRICAL CONTRACTOR SHALL PROVIDE ALL SWITCHES. THERMOSTATS SHALL BE APPROVED BY EQUIPMENT MANUFACTURER WITH HEAT/COOL/OFF & FAN AUTO/ON SETTING.
10. CONTROL TO BE PROVIDED BY THE ELECTRICAL CONTRACTOR.
11. THE HVAC SUBCONTRACTOR SHALL PROVIDE A WRITTEN GUARANTEE THAT SHALL WARRANT ALL WORKMANSHIP FOR A PERIOD OF ONE YEAR FROM DATE OF FINAL ACCEPTANCE. ANY WORK PERFORMED DURING THE FIRST YEAR SHALL BE PERFORMED AT NO COST TO OWNER. COMPRESSORS SHALL HAVE 5 YEAR WARRANTY (LABOR & MATERIALS).
12. ALL WORK SHALL BE COORDINATED WITH OTHER TRADES TO AVOID DELAYS WHICH MAY DELAY PROGRESS OF CONSTRUCTION.
13. FILTERS SHALL BE DISPOSABLE TYPE WITH INITIAL SHARE WEIGHT ARRESTANCE OF 10%. AND A CLEAN PRESSURE DROP OF .15. PROVIDE 2 SETS.
14. HVAC SUBCONTRACTOR SHALL PROVIDE ALL NECESSARY OFFSETS BENDS AND TRANSITIONS REQUIRED TO PROVIDE A COMPLETE AND OPERATING A/C SYSTEM AT NO ADDITIONAL COST TO OWNER.
15. PIPE ROOFTOP PACKAGE UNIT CONDENSATE DRAIN TO ROOFDRAIN OR GUTTER. VERIFY IN FIELD.
16. 2'x2' LAY–IN DIFFUSERS SHALL BE "TITUS" TMS–AA OR EQUAL (UNLESS NOTED)
17. RETURN GRILLES SHALL BE "TITUS" 4–FLOG FILTER BACK. UNLESS NOTED OTHERWISE.
18. SIDEWALL GRILLES SHALL BE "TITUS" 271 SERIES. UNLESS NOTED OTHERWISE.
19. ALL ZONES WITH A COMBINED SYSTEM AIR FLOW OF 2000 CFM OF ABOVE, SHALL HAVE SMOKE DETECTOR IN SUPPLY AIR DUCT. DUCT DETECTORS SHALL BE INTERLOCKED AND BE CONNECTED TO AN AUDIBLE VISUAL TEST PAD. WHERE ADDITIONAL UNITS ARE ADDED TO A ZONE TO EXCEED THE 2000 CFM, DETECTORS SHALL BE ADDED TO EXISTING UNITS.

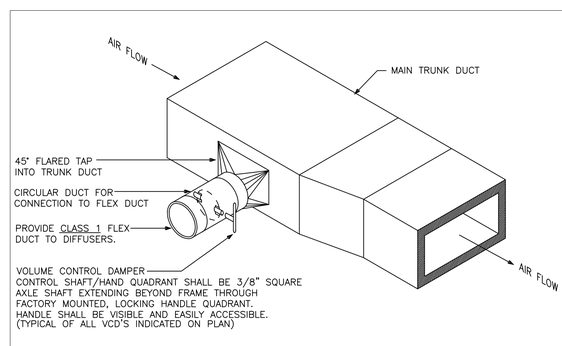

1 M-1 **FLEX DUCT CONNECTION DETAIL**
SCALE: NOT TO SCALE

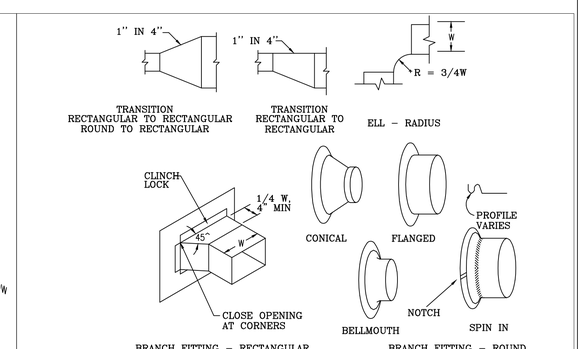

2 M-1 **TYPICAL DUCTWORK FITTINGS**
SCALE: NOT TO SCALE

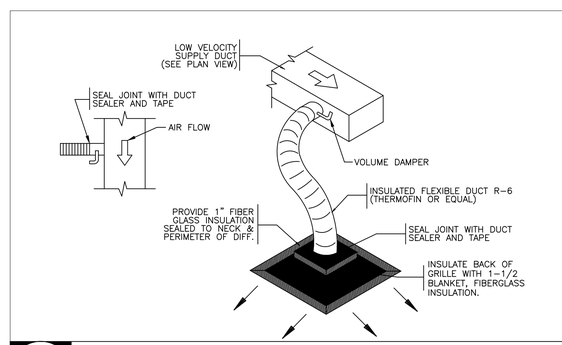

3 M-1 **FLEX DUCT CONNECTION DETAIL**
SCALE: NOT TO SCALE

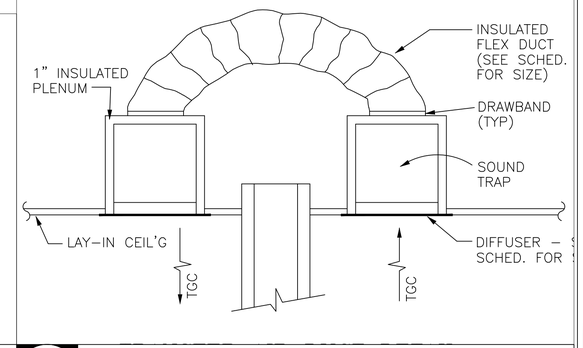

4 M-1 **TRANSFER AIR DUCT DETAIL**
SCALE: NOT TO SCALE

MECHANICAL PLAN LEGEND

ALL SUPPLY GRILL SIZE 24X24 LAYIN
RETURN AIR DUCT
FLEX DUCT (R–6)
4" ø FLEX DUCT
3/4" PVC DRAIN LINE
TRANSFER GRILLS
CEILING SUPPLY AIR
WALL SUPPLY AIR
RIGID DUCT (R–6)
AS INDICATED ON PLANS EXHAUST FAN

SANDRA PUERTA ARCHITECT
THE CONSTRUCTION AND ARCHITECTURE GROUP, INC.
SANDRA PUERTA
FL Lic. #: AA26002780 • AR 95385
6476 Kirsten Way, Lake Worth, FL 33467
Phone | 561.248.5498 Fax | 561.828.2645

DATE: Oct. 15, 20.

BLDG. DEPT. PLAN REVISIONS:
1
2
3
4
5
6
7

A Change of Use for:
Redeeming Lighthouse
7452 ROYAL PALM BLVD
MARGATE FL 33063
Parcel ID: 484126012190

Mechanical Plans and Notes

MANAGED BY: FZ
DRAWN BY: AD/FZ
REVIEWED BY: SP

SHEET: M-1

ATTACHMENT C

Master Parking Plan

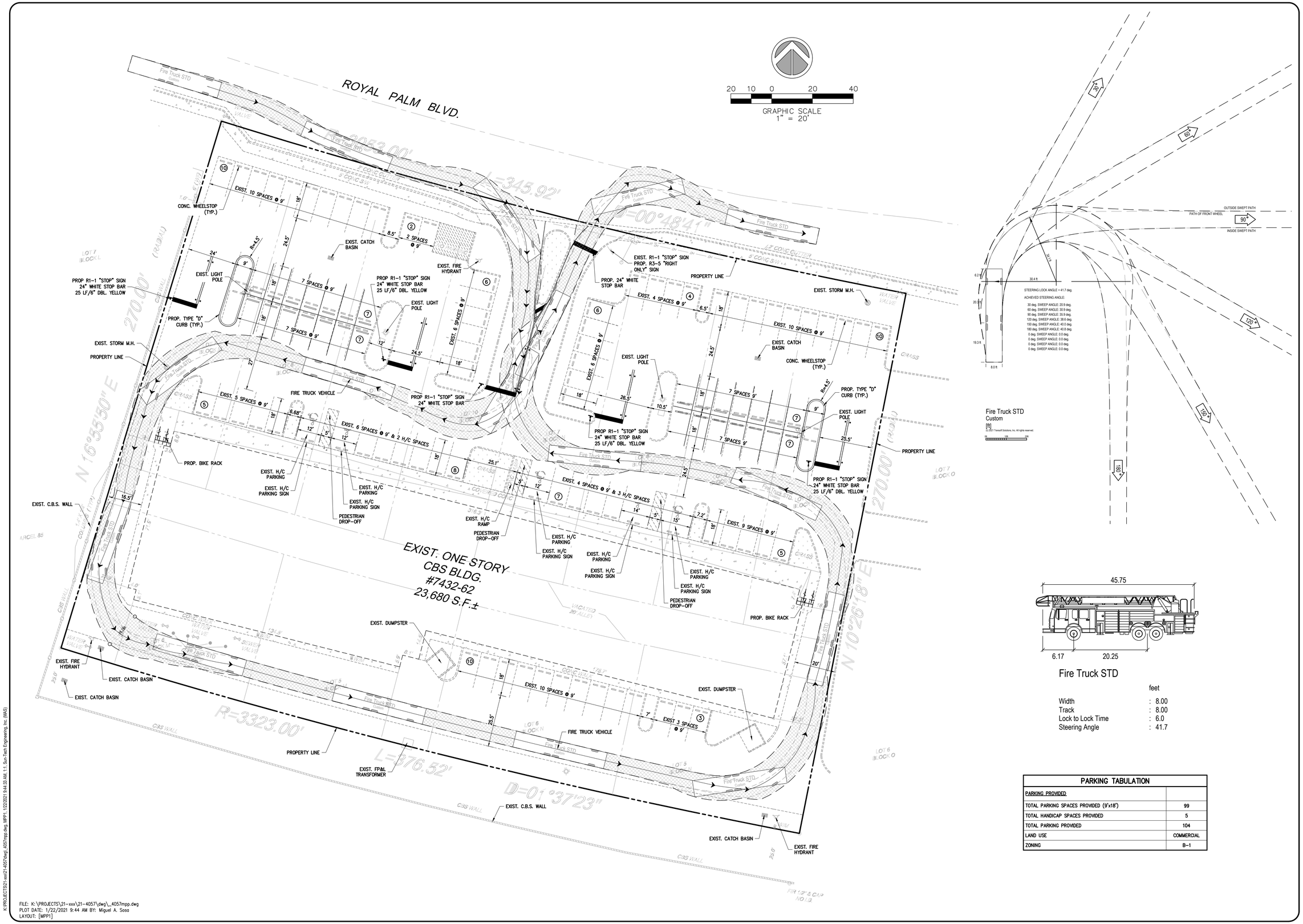

Fire Truck STD

	feet
Width	: 8.00
Track	: 8.00
Lock to Lock Time	: 6.0
Steering Angle	: 41.7

PARKING TABULATION	
PARKING PROVIDED	
TOTAL PARKING SPACES PROVIDED (9'x18')	99
TOTAL HANDICAP SPACES PROVIDED	5
TOTAL PARKING PROVIDED	104
LAND USE	COMMERCIAL
ZONING	B-1

4577 Nob Hill Road, Suite 102
Sunrise, FL 33351
www.sunteckeng.com
Certificate of Auth. #7097/LB 7019
Phone (954) 777-3123
Fax (954) 777-3114
STE Sun-Tech Engineering, Inc.
Engineers • Planners • Surveyors

REVISIONS

NO.	DATE:	DESCRIPTION

ROYAL PALM COURT

CITY OF MARGATE FLORIDA

MASTER PARKING PLAN

DATE:	JAN. 2021
SCALE:	1"=20'
DESIGNED BY:	M.G.
DRAWN BY:	M.A.S.
JOB #:	21-4057

CLIFFORD R. LOVAN LICENSE No. 56890 STATE OF FLORIDA PROFESSIONAL ENGINEER

Date: **January 22, 2021**

SHEET No.
MPP1

FILE: K:\PROJECTS\21-xxx\21-4057\dwg_4057mpp.dwg
PLOT DATE: 1/22/2021 9:44 AM BY: Miguel A. Sosa
LAYOUT: [MPP1]

K:\PROJECTS\21-xxx\21-4057\dwg_4057mpp.dwg, MPP1, 1/22/2021 9:44:33 AM, 1:1, Sun-Tech Engineering, Inc. (MAS)